MOTOROLA
Communications
Sector

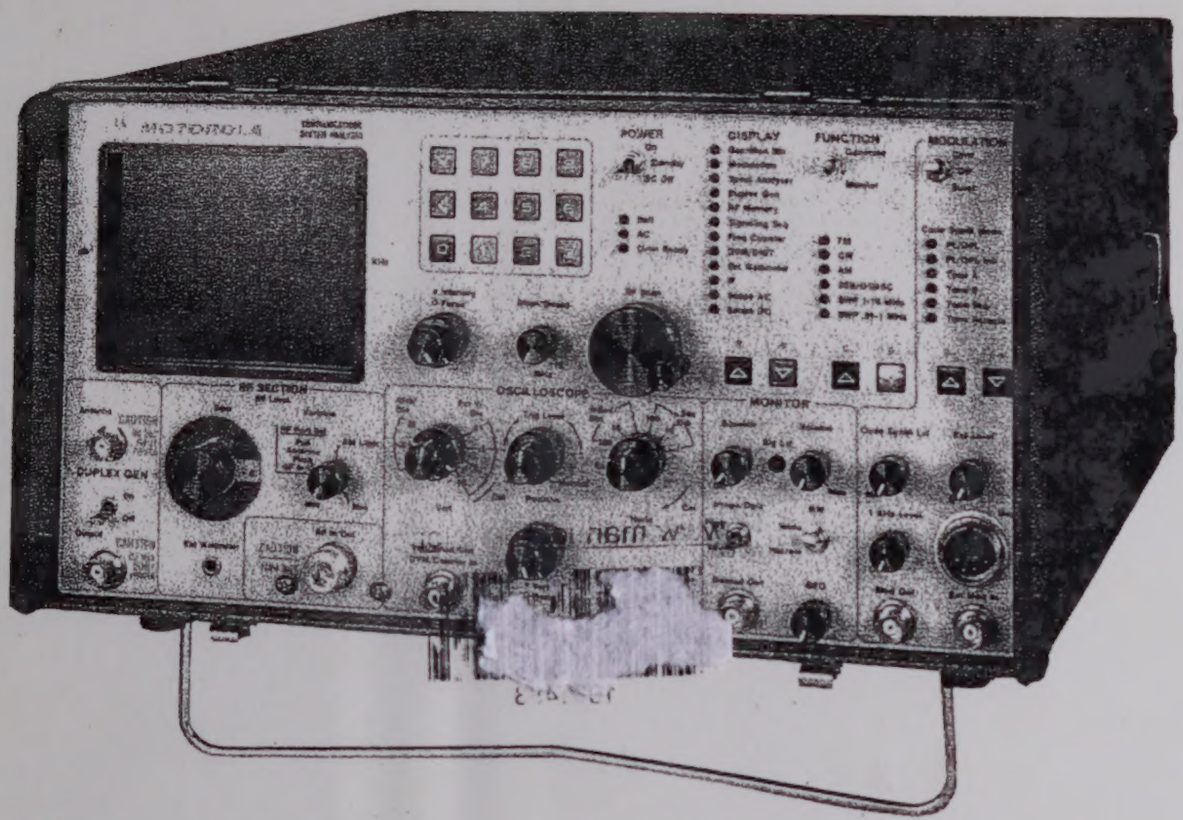

COMMUNICATIONS SYSTEM ANALYZER R-2001D

Maintenance Manual

Motorola Test
Equipment Products

MP MASTER
MA21726

Motorola, Inc. 1985
All Rights Reserved
Printed in U.S.A.

1313 E. Algonquin Rd.
Schaumburg, IL 60196

68P81069A63-A
8/24/87

MOTOROLA
Communications Sector

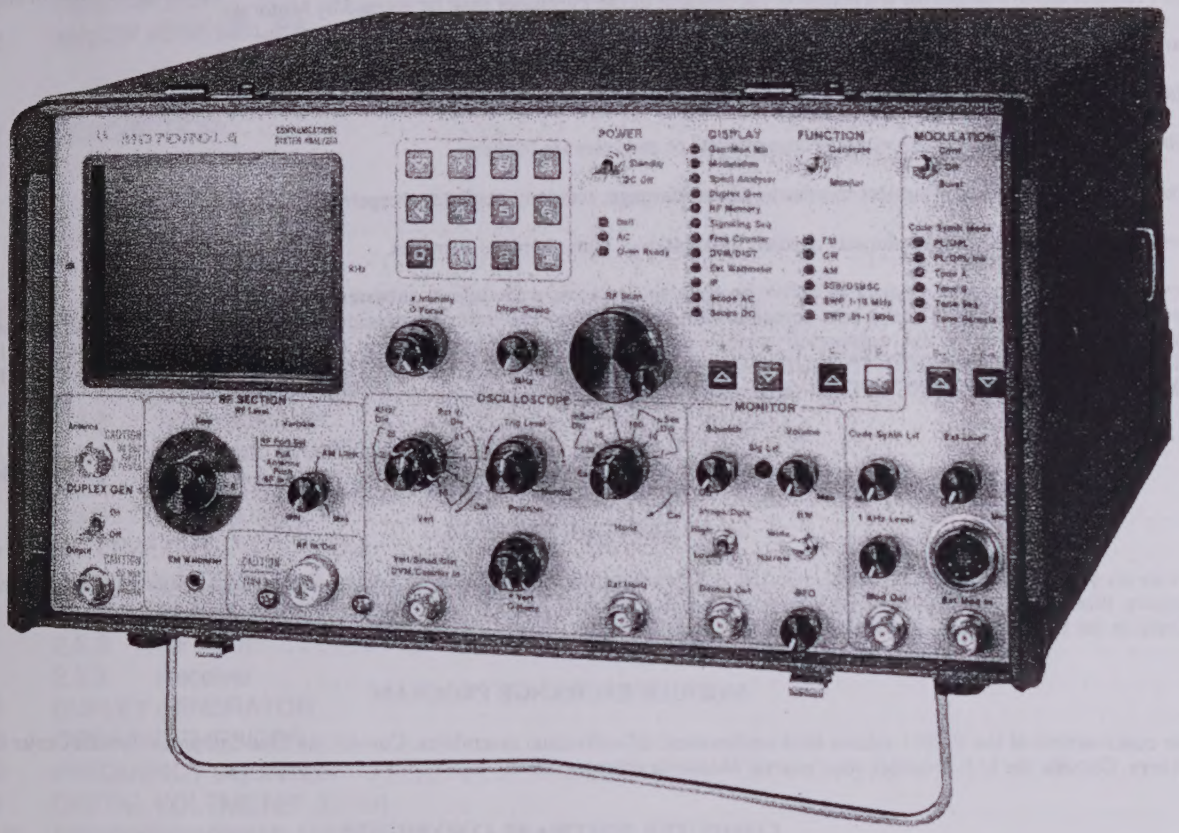

COMMUNICATIONS SYSTEM ANALYZER R-2001D

Maintenance Manual

Motorola Test Equipment Products

Motorola, Inc. 1985
All Rights Reserved
Printed in U.S.A.

1313 E. Algonquin Rd.
Schaumburg, IL 60196

68P81069A63-A
8/24/87

MOTOROLA TEST-EQUIPMENT PRODUCTS
LIMITED WARRANTY
(EXCLUDES EXPORT SHIPMENTS)

Motorola Test-Equipment Products (herein the "product") that are manufactured or distributed by Motorola Communications Group Parts Department are warranted by Motorola for a period of one (1) year from date of shipment against defects in material and workmanship.

This express warranty is extended to the original purchaser only. In the event of a defect, malfunction, or failure during the period of warranty, Motorola, at its option, will either repair or replace the product, providing that Motorola receives written notice specifying the nature of the defect during the period of warranty, and the defective product is returned to Motorola at 1313 East Algonquin Road, Schaumburg, IL 60196, transportation prepaid. Proof of purchase and evidence of date of shipment (packing list or invoice) must accompany the return of the defective product. Transportation charges for the return of the product to the Purchaser shall be prepaid by Motorola.

This warranty is void, as determined in the reasonable judgment of Motorola, if:

(a) The product has not been operated in accordance with the procedures described in the operating instructions;

(b) The seals on non-user-serviceable components or modules are broken;

(c) The product has been subject to misuse, abuse, damage, accident, negligence, repair or alteration.

In no event shall Motorola be liable for any special, incidental, or consequential damages.

In the event Motorola elects to repair a defective product by replacing a module or subassembly, Motorola, at its option, may replace such defective module or subassembly with a new or reconditioned replacement module or subassembly. Only the unexpired warranty of the warranty product will remain in force on the replacement module or subassembly. EXCEPT AS SPECIFICALLY SET FORTH HEREIN, ALL WARRANTIES EXPRESS OR IMPLIED, INCLUDING ANY IMPLIED WARRANTY OF FITNESS FOR A PARTICULAR PURPOSE OR MERCHANT ABILITY, ARE EXCLUDED.

EPS-30828-O

SUPPORT SERVICES

For service on your Motorola test equipment in the U.S., contact the Test-Equipment Service Center, Schaumburg, 1313 E. Algonquin Rd., Schaumburg, Illinois 60196 or call the Test-Equipment Service Hotline: 800/323-6967 during normal business hours. In Illinois call 1-312-576-7025. Outside the U.S., contact your nearest Motorola representative.

MODULE EXCHANGE PROGRAM

Modular construction of the R2001 allows field replacement of individual assemblies. Contact the Test-Equipment Service Center for pricing and delivery. Outside the U.S., contact your nearest Motorola representative.

COMPUTER SOFTWARE COPYRIGHTS

The Motorola products described in this instruction manual may include copyrighted Motorola computer programs stored in semiconductor memories or other mediums. Laws in the United States and other countries preserve for Motorola certain exclusive rights for copyrighted computer programs, including the exclusive right to copy or reproduce in any form the copyrighted computer program. Accordingly, any copyrighted Motorola computer programs contained in the Motorola products described in this instruction manual may not be copied or reproduced in any manner without the express written permission of Motorola. Furthermore, the purchase of Motorola products shall not be deemed to grant either directly or by implication, estoppel, or otherwise, any license under the copyrights, patents or patent applications of Motorola, except for the normal non-exclusive, royalty-free license to use that arises by operation of law in the sale of a product.

ESP-34440-A

Specifications subject to change without notice
, Motorola, Private-Line, and Digital Private-Line are trademarks of Motorola, Inc.
■ Printed in U.S.A. ■ ' 1985 Motorola Inc.

TABLE OF CONTENTS

Paragraph — Page

FOREWORD

SECTION 1. INTRODUCTION

1.1 DESCRIPTION . . . 1-1
1.2 MAJOR ASSEMBLIES . . . 1-8

SECTION 2. SYSTEM THEORY OF OPERATION

2.1 DESCRIPTION . . . 2-1
2.2 SYSTEM CONTROL . . . 2-1
2.2.1 Processor . . . 2-1
2.2.2 Processor Bus . . . 2-1
2.2.3 Control Busses . . . 2-1
2.2.4 IEEE Bus . . . 2-3
2.3 GENERATE MODE . . . 2-3
2.3.1 General . . . 2-3
2.3.2 Frequency Standard . . . 2-4
2.3.3 RF Synthesizer . . . 2-4
2.3.4 Wideband Amplifier . . . 2-4
2.3.5 Step Attenuator . . . 2-4
2.3.6 Input/Output . . . 2-4
2.4 WATTMETER . . . 2-4
2.5 MONITOR MODE . . . 2-5
2.5.1 General . . . 2-5
2.5.2 RF Input . . . 2-5
2.5.3 Receiver . . . 2-5
2.6 DUPLEX GENERATOR . . . 2-6
2.7 CODE SYNTHESIZER . . . 2-6
2.8 FREQUENCY COUNTER . . . 2-7
2.9 DIGITAL VOLTMETER (DVM) . . . 2-7
2.10 DISTORTION/SINAD METER . . . 2-8
2.11 OSCILLOSCOPE . . . 2-8

SECTION 3. ALIGNMENT PROCEDURE

3.1 INTRODUCTION . . . 3-1
3.1.1 Test Equipment Required . . . 3-1
3.1.2 Preparation for Alignment . . . 3-1
3.2 BASIC ALIGNMENT PROCEDURE . . . 3-1
3.2.1 Low Voltage Supply . . . 3-1
3.2.2 CRT Intensity Bias . . . 3-1
3.2.3 CRT Intensity Balance . . . 3-1
3.2.4 CRT Astigmatism and Geometry . . . 3-1
3.2.5 CRT Vertical Centering and Trace Rotation . . . 3-2
3.2.6 CRT Horizontal Centering . . . 3-2
3.2.7 CRT Horizontal Gain . . . 3-2
3.2.8 CRT Vertical Gain . . . 3-3
3.2.9 Vertical Input Gain . . . 3-3
3.2.10 DVM Zero . . . 3-3
3.2.11 Character Generator . . . 3-4
3.2.12 Spectrum Analyzer Centering . . . 3-4
3.2.13 Horizontal Timebase . . . 3-5

TABLE OF CONTENTS (Cont)

Paragraph			Page
3.3	EXTENDED ALIGNMENT PROCEDURE		3-5
	3.3.1	DVM	3-5
	3.3.2	Distortion/SINAD Alignment	3-6
	3.3.3	Receiver	3-6
	3.3.4	RF Synthesizer	3-7
	3.3.5	Frequency Standard	3-7
	3.3.6	Duplex Generator	3-7
	3.3.7	Wideband Amplifier	3-7
	3.3.8	Wattmeter	3-7
	3.3.9	Scope Compensation	3-7
	3.3.10	Cathode Voltage	3-7

SECTION 4. SYSTEM CHECKOUT AND TROUBLESHOOTING

4.1	INTRODUCTION		4-1
4.2	SAFE HANDLING OF CMOS INTEGRATED-CIRCUITS DEVICES		4-1
4.3	CHECKOUT AND TROUBLESHOOTING PROCEDURES		4-2

SECTION 5. SYSTEM WIRELIST AND PARTS LIST — SYSTEM MOTHERBOARD (A19)
(See **LIST OF TABLES**)

SECTION 6. HIGH-VOLTAGE POWER SUPPLY (A1)

6.1	DESCRIPTION		6-1
6.2	THEORY OF OPERATION		6-1
	6.2.1	Voltage Regulation Circuit	6-1
	6.2.2	Multipliers	6-1
	6.2.3	Intensity Modulator	6-1
	6.2.4	Focus Modulator	6-1
	6.2.5	Transient Protector (A1A2)	6-1

SECTION 7. SCOPE AMPLIFIER BOARD (A2)

7.1	DESCRIPTION		7-1
7.2	THEORY OF OPERATION		7-1
	7.2.1	Deflection Amplifiers	7-1
	7.2.2	Horizontal Timebase Generator	7-1
	7.2.3	Horizontal Switching	7-1
	7.2.4	Z-Axis Modulator	7-1
	7.2.5	Intensity Control	7-2
	7.2.6	Focus Control	7-2
	7.2.7	Astigmatism, Geometry, and Trace Rotation	7-2

SECTION 8. LOW-VOLTAGE POWER SUPPLY (A3-A6)

8.1	DESCRIPTION		8-1
8.2	THEORY OF OPERATION		8-1
	8.2.1	Battery Charger Board (A3)	8-1
	8.2.2	Control Board (A4)	8-1
	8.2.3	Output Board (A5)	8-3
	8.2.4	Switcher Board (A6)	8-4
	8.2.5	Rear Panel	8-4

TABLE OF CONTENTS (Cont)

Paragraph — Page

SECTION 9. SCOPE/DVM CONTROL BOARD (A7)

9.1 DESCRIPTION . . . 9-1
9.2 THEORY OF OPERATION . . . 9-1
9.2.1 Scope Vertical Control . . . 9-1
9.2.2 Dual-Display Control . . . 9-1
9.2.3 Scope Horizontal Control . . . 9-1
9.2.4 Synthesizer Sweep Control . . . 9-2
9.2.5 Scope Z-Axis Control . . . 9-2
9.2.6 Modulation-Display Control . . . 9-2
9.2.7 Peak Detector . . . 9-2
9.2.8 DVM Control . . . 9-2
9.2.9 External DVM/Distortion Control . . . 9-3
9.2.10 Distortion Measurement . . . 9-3
9.2.11 External DVM Measurement . . . 9-3
9.2.12 Audio Amplifier and Alarm Generator . . . 9-3
9.2.13 Board Control . . . 9-3

SECTION 10. RECEIVER BOARD (A8)

10.1 DESCRIPTION . . . 10-1
10.2 THEORY OF OPERATION . . . 10-1
10.2.1 Linear IF Section . . . 10-1
10.2.2 Logarithmic Amplifier . . . 10-2
10.2.3 FM/SSB/WB Signal-Present Detectors . . . 10-3
10.2.4 Baseband Audio-Processing Circuits . . . 10-4
10.2.5 Digital Control and Power Conditioning . . . 10-4

SECTION 11. RF SYNTHESIZER MODULE (A9)

11.1 DESCRIPTION . . . 11-1
11.2 THEORY OF OPERATION . . . 11-1
11.2.1 Reference and Control Board (A9A1) . . . 11-1
11.2.2 310 to 440-MHz Loop Board (A9A2) . . . 11-2
11.2.3 Output Board (A9A3) . . . 11-2
11.2.4 60.5-MHz Loop Board (A9A4) . . . 11-3
11.2.5 GHz Loop Board (A9A5) . . . 11-3
11.2.6 640-MHz Loop Board (A9A6) . . . 11-4
11.3 SYNTHESIZER MOTHERBOARD (A9A7) . . . 11-5

SECTION 12. AUDIO SYNTHESIZER BOARD (A10)

12.1 DESCRIPTION . . . 12-1
12.2 THEORY OF OPERATION . . . 12-1
12.2.1 Audio Synthesizer . . . 12-1
12.2.2 DPL Generator . . . 12-1
12.2.3 1-kHz Tone . . . 12-2
12.2.4 Internal Modulation . . . 12-2
12.2.5 External Modulation . . . 12-2
12.2.6 Modulation Control . . . 12-2
12.2.7 Board Control . . . 12-2

TABLE OF CONTENTS (Cont)

Paragraph Page

SECTION 13. PROCESSOR INTERFACE BOARD (A11)

13.1 DESCRIPTION 13-1
13.2 THEORY OF OPERATION. 13-1
13.2.1 System Control-Bus Interface 13-1
13.2.2 Digital Voltmeter (DVM) 13-1
13.2.3 Frequency Counter 13-2
13.2.4 Board Control 13-3

SECTION 14. PROCESSOR BOARD (A14)

PART 1. 01-P22140E001

14.1 DESCRIPTION 14-1
14.2 THEORY OF OPERATION. 14-1
14.2.1 Microprocessor. 14-1
14.2.2 Memory 14-1
14.2.3 Input/Output 14-2
14.2.4 Character Display 14-2

PART 2. 01-P29050H001

14.3 DESCRIPTION 14-3
14.4 THEORY OF OPERATION. 14-3
14.4.1 Microprocessor. 14-3
14.4.2 Memory 14-3
14.4.3 Input/Output 14-3
14.4.4 Character Display 14-4
14.4.5 DTMF Encode/Decode 14-4
14.4.6 Printer Port. 14-4

SECTION 15. FRONT-PANEL INTERFACE BOARD (A15)

15.1 DESCRIPTION 15-1
15.2 THEORY OF OPERATION. 15-1
15.2.1 Processor-Control Interface 15-1
15.2.2 Analog Interface 15-5

SECTION 16. FREQUENCY-STANDARD INTERFACE BOARD (A16)

16.1 DESCRIPTION 16-1
16.2 THEORY OF OPERATION. 16-1
16.2.1 Internal Source 16-1
16.2.2 External Source 16-1

SECTION 17. RF INPUT MODULE (A17)

17.1 DESCRIPTION 17-1
17.2 THEORY OF OPERATION. 17-1
17.2.1 Wattmeter Board (A17A1) 17-1
17.2.2 Wideband Amplifier Board (A17A2). 17-2
17.2.3 Duplex Generator Board (A17A3). 17-3

SECTION 18. FRONT PANEL ASSEMBLY (A18)

18.1 DESCRIPTION 18-1
18.2 CONTROLS, SWITCHES AND LEDs 18-1
18.3 DECODING FOR DISPLAY, FUNCTION AND MODULATION LEDs 18-4

TABLE OF CONTENTS (Cont)

Paragraph — Page

SECTION 19. BATTERY ASSEMBLY

19.1 DESCRIPTION . . . 19-1
19.2 INSTALLATION . . . 19-1
19.3 OPERATION . . . 19-2

SECTION 20. CELLULAR TELEPHONE TEST OPTION

20.1 DESCRIPTION . . . 20-1
20.2 THEORY OF OPERATION . . . 20-1
20.2.1 Transmitted Data . . . 20-1
20.2.2 Received Data . . . 20-1
20.2.3 Control . . . 20-1
20.2.4 Modulation . . . 20-1
20.2.5 10-KHz Detection . . . 20-1
20.2.6 Manual-Mode Control . . . 20-1
20.2.7 Printer . . . 20-2

SECTION 21. IEEE/REMOTE INTERFACE OPTION

PART 1. IEEE INTERFACE

21.1 DESCRIPTION . . . 21-1
21.2 THEORY OF OPERATION . . . 21-1
21.2.1 IEEE Bus Interface . . . 21-1
21.2.2 RF-Level Control . . . 21-1
21.2.3 Modulation Control . . . 21-1
21.2.4 Address-Decode and Control-Latch Circuitry . . . 21-1
21.2.5 Multipurpose Input/Output and Relay Ports . . . 21-1

PART 2. REMOTE INTERFACE

21.3 DESCRIPTION . . . 21-2
21.4 THEORY OF OPERATION . . . 21-2
21.4.1 IEEE Bus Interface . . . 21-2
21.4.2 RS-232 Bus Interface . . . 21-2
21.4.3 RF-Level Control . . . 21-2
21.4.4 Modulation Control . . . 21-2
21.4.5 Address-Decode and Control-Latch Circuitry . . . 21-2
21.4.6 Multipurpose Input/Output and Relay Ports . . . 21-2

SECTION 22. SECURE COM OPTION

22.1 DESCRIPTION . . . 22-1
22.2 THEORY OF OPERATION . . . 22-1
22.2.1 Transmit . . . 22-1
22.2.2 Receive . . . 22-1
22.3 ENCODER SECTION . . . 22-1
22.3.1 Inputs . . . 22-1
22.3.2 Encryption Type . . . 22-1
22.3.3 Encoder Outputs . . . 22-1
22.4 DECODER SECTION . . . 22-2
22.4.1 Inputs . . . 22-2
22.4.2 Decryption Types . . . 22-2
22.4.3 Outputs . . . 22-2
22.5 PROGRAMMER SECTION . . . 22-2

TABLE OF CONTENTS (Cont)

Paragraph Page

SECTION 22. SECURE COM OPTION (Cont)

22.6 MEASUREMENTS 22-2
22.6.1 Bit Error Rate Test 22-2
22.6.2 Deviation Measurement 22-2
22.6.3 Line Level Measurement 22-3
22.6.4 Oscilloscope Displays 22-3
22.7 FEATURES 22-3
22.7.1 End of Message (EOM Signaline Test) 22-3
22.7.2 Self Testing 22-3
22.7.3 Dual Code Operation 22-3
22.7.4 Plain Text Output 22-4
22.7.5 Printer Interface 22-4

SECTION 23. TRUNKED RADIO TEST

23.1 DESCRIPTION 23-1
23.2 THEORY OF OPERATION 23-1
23.2.1 Transmitted Data 23-1
22.2.2 Received Data 23-1
23.2.3 Data Detect Circuit 23-1
23.2.4 Modulation 23-1
23.2.5 Synthesizer 23-1

LIST OF ILLUSTRATIONS

Figure		Page
	FOREWORD	
1	Repair Request Form	xiii
	SECTION 1. INTRODUCTION	
1-1	Two-Tone (A/B) Sequence Timing	1-5
1-2	5/6 Tone Sequence Timing	1-6
1-3	MTS Sequence Timing	1-6
1-4	2805 Sequence Timing	1-6
1-5	Communications System Analyzer — Top View, Cover Removed	1-9
1-6	Communications System Analyzer — Bottom View, Cover Removed	1-9
	SECTION 2. SYSTEM THEORY OF OPERATION	
2-1	Communications System Analyzer — Block Diagram	2-11
2-2	Communications System Analyzer — Bus Structure	2-12
2-3	Generate Mode — Block Diagram	2-13
2-4	Wattmeter — Block Diagram	2-14
2-5	Monitor Mode — Block Diagram	2-15
2-6	Duplex Generator — Block Diagram	2-16
2-7	Code Synthesizer — Block Diagram	2-16
2-8	Frequency Counter — Block Diagram	2-17
2-9	DVM/Distortion Analyzer — Block Diagram	2-18
2-10	Oscilloscope — Block Diagram	2-19
	SECTION 3. ALIGNMENT PROCEDURE	
3-1	Control Board (A4) — Alignment Points	3-2
3-2	Scope Amplifier Board (A2) — Alignment Points	3-3
3-3	Front Panel Interface Board (A15) — Alignment Points	3-4
3-4	Scope/DVM Control Board (A7) — Alignment Points	3-5
3-5	Processor Interface Board (A11) — Alignment Points	3-7
3-6	Receiver Board (A8) — Alignment Points	3-12
3-7	60.5 MHz Loop Board (A9A4) — Alignment Points	3-13
3-8	GHz Loop Board — Alignment Points	3-14
3-9	Frequency Standard Interface Board — Alignment Points	3-15
3-10	Duplex Generator Board (A17A3) — Alignment Points	3-16
3-11	Wideband Amplifier Board — Alignment Points	3-17
3-12	Wattmeter Board — Alignment Points	3-18
3-13	Scope Compensation	3-19
3-14	High Voltage Power Supply Board — Alignment Poitns	3-20
	SECTION 5. SYSTEM WIRELIST AND PARTS LIST — SYSTEM MOTHERBOARD (A19)	
5-1 a,b	System Motherboard (A19) — Printed Wiring Board Assembly and Parts List	5-95
5-2 a,b	Chassis-Assembly and Parts List	5-97
5-3	Subsystem — Assembly and Parts List	5-98
5-4	CRT-Assembly and Parts List	5-99
5-5	Front Cover-Assembly and Parts List	5-100
	SECTION 6. HIGH-VOLTAGE POWER SUPPLY (A1)	
6-1	Block Diagram	6-3
6-2	Schematic	6-4
6-3	Printed Wiring Board Assembly and Parts List	6-5
6-4	Assembly and Parts List	6-6
6-5	Transient Protector (A1A2) — Assembly and Parts List	6-7

LIST OF ILLUSTRATIONS (Cont)

Figure		Page
	SECTION 7. SCOPE AMPLIFIER BOARD (A2)	
7-1	Block Diagram	7-3
7-2 a,b	Schematic (Sheets 1 and 2)	7-4
7-3	Printed Wiring Board Assembly and Parts List	7-7
	SECTION 8. LOW-VOLTAGE POWER SUPPLY (A3-A6)	
8-1	Block Diagram	8-5
8-2	Battery Charger Board (A3) — Schematic	8-6
8-3	Battery Charger Board (A3) — Printed Wiring Board Assembly and Parts List	8-7
8-4	Battery Charger Board (A3) — Assembly and Parts List	8-8
8-5	Control Board (A4) — Block Diagram	8-9
8-6	Control Board (A4) — Schematic	8-10
8-7	Control Board (A4) — Printed Wiring Board Assembly and Parts List	8-11
8-8	Output Board (A5) — Schematic	8-13
8-9 a,b	Output Board (A5) — Printed Wiring Board Assembly and Parts List (Sheets 1 and 2)	8-15
8-10	Switcher Board (A6) — Schematic	8-17
8-11	Switcher Board (A6) — Printed Wiring Board Assembly and Parts List	8-19
8-12	Switcher Board (A6) — Assembly and Parts List	8-20
	SECTION 9. SCOPE/DVM CONTROL BOARD (A7)	
9-1 a,b	Block Diagram (Sheets 1 and 2)	9-5
9-2 a-d	Schematic (Sheets 1 thru 4)	9-7
9-3	Printed Wiring Board Assembly and Parts List	9-11
	SECTION 10. RECEIVER BOARD (A8)	
10-1 a	Receiver Board (A8) — Block Diagram	10-7
10-1 b	Linear IF Amplifier — Block Diagram	10-8
10-1 c	Logarithmic Amplifier — Block Diagram	10-9
10-1 d	FM/SSB/WB Signal-Present Detectors — Block Diagram	10-9
10-1 e	Baseband Audio-Processing Circuits — Block Diagram	10-10
10-2 a-e	Schematic (Sheets 1 thru 5)	10-11
10-3 a,b	Printed Wiring Board Assembly and Parts List (Sheets 1 thru 4)	10-17
	SECTION 11. RF SYNTHESIZER MODULE (A9)	
11-1	RF Synthesizer Module (A9) — Block Diagram	11-7
11-2	RF Synthesizer Module (A9) — Assembly and Parts List	11-8
11-3 a,b	Reference and Control Board (A9A1) — Block Diagram	11-9
11-4	Reference and Control Board (A9A1) — Schematic	11-10
11-5	Reference and Control Board (A9A1) — Printed Wiring Board Assembly and Parts List	11-11
11-6	310 to 440-MHz Loop Board (A9A2) — Block Diagram	11-13
11-7	310 to 440-MHz Loop Board (A9A2) — Schematic	11-14
11-8	310 to 440-MHz Loop Board (A9A2) — Printed Wiring Board Assembly and Parts List	11-15
11-9	Synthesizer Output Board (A9A3) — Block Diagram	11-17
11-10	Synthesizer Output Board (A9A3) — Schematic	11-18
11-11	Synthesizer Output Board (A9A3) — Printed Wiring Board Assembly and Parts List	11-19
11-12	60.5-MHz Loop Board (A9A4) — Block Diagram	11-21
11-13 a,b	60.5-MHz Loop Board (A9A4) — Schematic (Sheets 1 and 2)	11-22
11-14	60.5-MHz Loop Board (A9A4) — Printed Wiring Board Assembly and Parts List	11-25
11-15	GHz Loop Board (A9A5) — Block Diagram	11-27
11-16	GHz Loop Board (A9A5) — Schematic	11-28
11-17 a,b	GHz Loop Board (A9A5) — Printed Wiring Board Assembly and Parts List (Sheets 1 and 2)	11-29

LIST OF ILLUSTRATIONS (Cont)

Figure		Page
11-18	640-MHz Loop Board (A9A6) — Block Diagram	11-31
11-19	640-MHz Loop Board (A9A6) — Schematic	11-32
11-20	640-MHz Loop Board (A9A6) — Printed Wiring Board Assembly and Parts List	11-33
11-21 a,b	Synthesizer Motherboard (A9A7) — Printed Wiring Board Assembly and Parts List (Sheets 1 and 2)	11-35
	SECTION 12. AUDIO SYNTHESIZER BOARD (A10)	
12-1	Block Diagram	12-3
12-2 a-c	Schematic (Sheets 1 thru 3)	12-4
12-3	Printed Wiring Board Assembly and Parts List	12-7
	SECTION 13. PROCESSOR INTERFACE BOARD (A11)	
13-1	Block Diagram	13-5
13-2 a-c	Schematic (Sheets 1 thru 3)	13-6
13-3	Printed Wiring Board Assembly and Parts List	13-9
	SECTION 14. PROCESSOR BOARD (A14)	
14-1	Memory Map	14-1
14-2	Memory Map	14-3
14-3	Block Diagram (01-P22140E001) Part 1	14-5
14-4 a-e	Schematic (Sheets 1 thru 5)	14-6
14-5	Printed Wiring Board Assembly and Parts List	14-11
14-6	Block Diagram (01-P29050H001) Part 2	14-13
14-7 a-f	Schematic (Sheets 1 thru 6)	14-14
14-8	Printed Wiring Board Assembly and Parts List	14-20
	SECTION 15. FRONT-PANEL INTERFACE BOARD (A15)	
15-1	Block Diagram	15-7
15-2 a,b	Schematic (Sheets 1 and 2)	15-8
15-3	Printed Wiring Board Assembly and Parts List	15-11
	SECTION 16. FREQUENCY-STANDARD INTERFACE BOARD (A16)	
16-1	Block Diagram	16-1
16-2	Schematic	16-3
16-3	Printed Wiring Board Assembly and Parts List	16-5
16-4	Assembly and Parts List	16-6
	SECTION 17. RF INPUT MODULE (A17)	
17-1	Block Diagram	17-7
17-2	Interconnect Diagram	17-8
17-3 a	Assembly and Parts List	17-9
17-3 b	RF Input Flex Standard — Printed Wiring Board Assembly and Parts List	17-10
17-4	RF Wattmeter Board (A17A1) — Block Diagram	17-11
17-5	RF Wattmeter Board (A17A1) — Schematic	17-12
17-6	RF Wattmeter Board (A17A1) — Printed Wiring Board Assembly and Parts List	17-13
17-7	Wideband Amplifier Board (A17A2) — Block Diagram	17-15
17-8	Wideband Amplifier Board (A17A2) — Schematic	17-16
17-9	Wideband Amplifier Board (A17A2) — Printed Wiring Board Assembly and Parts List	17-17
17-10	Duplex Generator Board (A17A3) — Block Diagram	17-19
17-11	Duplex Generator Board (A17A3) — Schematic	17-20
17-12	Duplex Generator Board (A17A3) — Printed Wiring Board Assembly and Parts List	17-21

LIST OF ILLUSTRATIONS (Cont)

Figure		Page
	SECTION 18. FRONT PANEL ASSEMBLY (A18)	
18-1 a,b	Schematic	18-5
18-2 a	Front Panel — Photo	18-6
18-2 b	Inside Front Panel — Photo	18-7
18-2 c	Inside Front Panel — Drawing	18-7
18-2 d,e	Front Panel Left and Right Flexes — Printed Wiring Board Assemblies and Parts List	18-8
18-2 f	Switch Interconnect Board (A18A2) — Printed Wiring Board Assembly and Parts List	18-9
18-3	Display Board (A18A1) — Schematic	18-10
18-4	Display Board (A18A1) — Printed Wiring Board Assembly and Parts List	18-11
	SECTION 19. BATTERY ASSEMBLY	
19-1	Mounting Detail	19-1
19-2	Schematic	19-2
19-3 a,b	Printed Wiring Board Assembly, Parts Location Detail and Parts List	19-3
	SECTION 20. CELLULAR TELEPHONE TEST OPTION	
20-1	Block Diagram	20-3
20-2 a, b	Schematic (Sheets 1 and 2)	20-4
20-3	Printed Wiring Board Assembly and Parts List	20-7
	SECTION 21. IEEE/REMOTE INTERFACE OPTION	
	PART 1. IEEE INTERFACE	
21-1	Block Diagram	21-3
21-2 a, b	Schematic (Sheets 1 and 2)	21-4
21-3	Printed Wiring Board Assembly and Parts List	21-7
21-4	RF Input Module, IEEE/Remote Interface Options — Assembly and Parts List	21-9
	PART 2. REMOTE INTERFACE	
21-5 a-f	Schematic (Sheets 1 and 6)	21-11
21-6 a,b	Printed Wiring Board Assembly and Parts List	21-17
	SECTION 22. SECURE COM OPTION	
22-1	Block Diagram	22-3
22-2 a-g	Schematic (Sheets 1 thru 7)	22-4
22-3	Printed Wiring Board Assembly and Parts List	22-11
	SECTION 23. TRUNKED RADIO TEST OPTION	
23-1	Block Diagram	23-3
23-2 a-e	Schematic (Sheets 1 thru 5)	23-4
23-3	Printed Wiring Board Assembly and Parts List	23-9

LIST OF TABLES

Table		Page
	SECTION 1. INTRODUCTION	
1-1	Physical Characteristics	1-1
1-2	Electrical Characteristics	1-1
1-3	Input/Output Characteristics	1-7
1-4	List of Subassemblies	1-8
	SECTION 2. SYSTEM THEORY OF OPERATION	
2-1	AF BUS Control	2-2
2-2	RF BUS Control	2-3
2-3	MOD Control	2-3
2-4	Receiver Control	2-3
2-5	Duplex Control	2-3
2-6	Receiver Filters	2-3
	SECTION 3. ALIGNMENT PROCEDURE	
3-1	Basic Test Equipment Required	3-1
3-2	Extended Test Equipment Required	3-1
	SECTION 4. SYSTEM CHECKOUT AND TROUBLESHOOTING	
4-1	Test Equipment for Checkout and Troubleshooting	4-1
4-2	System Checkout and Troubleshooting Procedures	4-2
4-3	Test-Point Identification	4-13
	SECTION 5. SYSTEM WIRELIST AND PARTS LIST — SYSTEM MOTHERBOARD (A19)	
5-1	System Motherboard Wirelist	5-2
5-2 a-r	System Wirelist	5-59
	SECTION 6. HIGH-VOLTAGE POWER SUPPLY (A1)	
6-1	Wirelist for the High-Voltage Power Supply	6-2
	SECTION 8. LOW-VOLTAGE POWER SUPPLY (A3-A6)	
8-1	Control Logic Functions	8-3
8-2	Output Voltages	8-4
	SECTION 9. SCOPE/DVM CONTROL BOARD (A7)	
9-1	Internal DVM Inputs	9-3
	SECTION 10. RECEIVER BOARD (A8)	
10-1	Functions of Digital Control Bits	10-5
10-2	Low-Pass Filter — Control-Bit Patterns	10-5
10-3	High-Pass Filter — Control-Bit Patterns	10-5
10-4	Modulation-Select — Control-Bit Patterns	10-5
	SECTION 15. FRONT-PANEL INTERFACE BOARD (A15)	
15-1	AF ADD and DATA BUS	15-2
15-2	Decoding for Display, Function, and Modulation LEDs	15-2
15-3	Range-Attenuator Switching	15-3
15-4	Input Switching	15-3
15-5	RF-Attenuator Encoding	15-3
15-6	Functions of Miscellaneous Inputs	15-4
15-7	Sweep-Select Encoding	15-4

LIST OF TABLES (Cont)

Table — Page

SECTION 17. RF INPUT MODULE (A17)

17-1 Switch Control 17-4
17-2 RF Input Module — Wirelist 17-5

SECTION 18. FRONT PANEL ASSEMBLY

18-1 Controls, Switches and LEDs on the Front Panel 18-1
18-2 Decoding for Display, Function, and Modulation LEDs 18-4

1. SCOPE OF MANUAL

This manual contains information for maintenance of Motorola's Communications System Analyzer.

2. PURPOSE AND USE

This manual is designed specifically as an aid to troubleshooting and repairing the System Analyzer. It is arranged so that you can conveniently troubleshoot and repair at the board level and pursue detailed investigations to the component level by using the composite drawing of each printed wiring board assembly.

3. WARNINGS AND CAUTIONS

You should observe several precautions when handling this equipment.

WARNING

This unit is designed to be operated with a ground connection to the chassis via a three-wire power connection. If the unit is not properly grounded while operating from an ac power source, the voltage potential between it and ground may cause an electrical shock.

WARNING

This system's Processor board uses a lithium battery as a memory keep-alive voltage source. Do not mutilate or disassemble the battery cell. The lithium metal is a very active material that burns in the presence of water or high humidity. Do not put the battery in fire, attempt to charge it, heat it above 100°C, or solder directly to the cell. Do not overdischarge the cell to a reverse voltage greater than 3V: the battery may burst and burn or release hazardous materials. (See Section 4, Table 4-2, under NON-VOLATILE MEMORY, for battery troubleshooting procedures and cautions.)

CAUTION

Lithium batteries are classified as hazardous materials and must be disposed of accordingly. Do not throw out the battery with the everyday trash. Consult state and local codes for the appropriate disposal procedure. Motorola will dispose of an expended battery if you return it (in the replacement battery container) to the following address: Motorola Inc., Return Goods Department, 1313 East Algonquin Road, Schaumburg, Ill. 60196.

CAUTION

This equipment contains parts that are subject to damage by static electricity. Take proper precautions when handling them. (For specific precautions on handling CMOS integrated circuits, see Section 4, System Checkout and Troubleshooting, paragraph 4.2.)

4. SERVICE

The Motorola Test-Equipment Repair Center services all test equipment supplied by the Motorola Communications Group. The center maintains a stock of replacement parts for original equipment and a complete library of service information for all Motorola test equipment. (For the request form, see Figure 1 at the end of the section.)

Most in-warranty repairs are performed at the Center. Exceptions include repairs on some equipment not manufactured by Motorola. These are performed by the original supplier under the direction of the Test-Equipment Repair Center. Out-of-warranty service is performed on a time-and-materials basis at competitive rates, with a turn-around goal of less than ten working days. Reply cards returned with repaired instruments continually survey customer satisfaction.

The Test-Equipment Repair Center also provides the convenience of telephone troubleshooting. Frequently, under the direction of the Test-Equipment Repair Center, you will be able to troubleshoot a piece of equipment and isolate defective components via

telephone. Required replacement parts are then immediately shipped to you, thereby reducing shipping time and servicing costs. For telephone troubleshooting, contact the Test-Equipment Repair Center toll free at (800) 323-6967.

All other inquiries and requests for calibration and repairs of test equipment should be directed to the Area Parts Office. This office will contact the Test-Equipment Repair Center, process the necessary paperwork and, if necessary, have the Center contact you to expedite the repair.

5. ORDERING REPLACEMENT PARTS

Motorola maintains a number of parts offices strategically located throughout the United States. These facilities are staffed to process parts orders, identify part numbers, and otherwise assist in the maintenance and repair of Motorola Communications products.

Orders for all replacement parts should be sent to the nearest area parts and service center listed below. When ordering replacement parts, be sure to include the complete identification number located on the equipment.

6. ADDRESSES

6.1 General Offices

MOTOROLA INC.
Communications Division Parts Dept.
1313 E. Algonquin Rd.
Schaumburg, Illinois 60196
Phone: 312-397-1000
Executive Offices: 1301 E. Algonquin Rd.
Schaumburg, Illinois 60196

6.2 U. S. Orders

WESTERN AREA PARTS
1170 Chess Drive, Foster City
San Mateo, California 94404
Phone: 415-349-3111
TWX: 910-375-3877

MID-ATLANTIC AREA PARTS
7230 Parkway Drive
Hanover, Maryland 21076
Phone: 301-796-8600
TWX: 710-862-1941

EASTERN AREA PARTS
85 Harristown Road
Glen Rock, New Jersey 07452
Phone: 201-447-4000
TWX: 710-988-5602

SOUTHWESTERN AREA PARTS
3320 Belt Line Road
Dallas, Texas 75234
Phone: 214-241-2151
TWX: 910-860-5505

GULF STATES AREA PARTS
8550 Katy Freeway
Houston, Texas 77024
Phone: 713-932-8955

MIDWEST AREA PARTS
1313 E. Algonquin Rd.
Schaumburg, Ill. 60196
Phone: 312-576-7322
TWX: 910-693-0869

EAST CENTRAL AREA PARTS
12995 Snow Road
Parma, Ohio 44130
Phone: 216-267-2210
TWX: 810-421-8845

PACIFIC SOUTHWESTERN AREA PARTS
9980 Carroll Canyon Road
San Diego, California 92131
Phone: 714-578-2222
TWX: 910-335-1634

SOUTHEASTERN AREA PARTS
5096 Panola Industrial Blvd.
Decatur, Georgia 30032
Phone: 504-981-9800
TWX: 810-766-0876

6.3 Canadian Orders

CANADIAN MOTOROLA ELECTRONICS COMPANY
Parts Department
3125 Steeles Avenue
East Willowdale, Ontario
Phone: 516-499-1441
TWX: 610-492-2713
Telex: 02-29944LD

6.4 All Countries Except U.S. and Canada

MOTOROLA INC., OR MOTOROLA AMERICAS, INC.
International Parts
1313 E. Algonquin Road
Schaumburg, Illinois 60196 U.S.A.
Phone: 312-397-1000
TWX: 910-693-1592 or 1599
Telex: 722433 or 722424
Cable: MOTOL

MOTOROLA, INC.
COMMUNICATIONS SECTOR
TEST EQUIPMENT REPAIR CENTER
1313 EAST ALGONQUIN ROAD SCHAUMBURG, ILLINOIS 60196

TEST EQUIPMENT REPAIR REQUEST FORM

This completed form must accompany equipment returned for repair.

CUSTOMER'S PURCHASE ORDER NO.		DATE	
MODEL NUMBER		SERIAL NUMBER	
DESCRIPTION OF PROBLEM:			
REQUESTED REPAIRS:			
SHIP TO ADDRESS:			
SHIP VIA:			

Providing the information below will reduce the turnaround time on your Test Equipment Repair.

MOTOROLA CUSTOMER NUMBER	BILL TAG	SHIP TAG	INTERNAL MOTOROLA ACCOUNT NO.

Figure 1. Repair Request Form

SIGNED: _____

SECTION 1. INTRODUCTION

1.1 DESCRIPTION

The Motorola Communications System Analyzer is a portable test instrument, designed specifically for servicing and monitoring communications equipment. Its functions supersede those of a Service Monitor, expanding the features and capabilities so that servicing involves only a single instrument, rather than a host of separate equipment.

The R2001D is the standard Communications System Analyzer. The R2002D has the added capability of an IEEE-488 Standard Interface control bus, and the R2008D has the added capability of "Cellular Radio" testing. The R2009D adds both of these capabilities to the basic unit. By improving a technician's efficiency and accuracy, the Analyzer reduces service time.

The Communications System Analyzer generates and monitors signals, performing the tests normally associated with the equipment listed below.

- Spectrum Analyzer
- Duplex Generator
- Modulation Oscilloscope
- Frequency Counter
- AC/DC Digital Voltmeter
- RF Wattmeter/Signal-Level Meter
- General Purpose Oscilloscope
- Multi-Mode Code Synthesizer
- Distortion/SINAD Meter
- Sweep Generator
- DTMF Encode/Decode
- Printer Port

The Analyzer meets the shock and vibration requirements of EIA test RS152B, the same specifications met by Motorola mobile radios. This minimizes failure when the instrument is used in a mobile service van, and means the Analyzer is as tough as the radios it services.

Tables 1-1, 1-2, and 1-3 list the physical, electrical, and input/output characteristics of the Communications System Analyzer.

Table 1-1. Physical Characteristics

Characteristics	Description
Length	20.00 inches (50.8 cm)
Width	15.50 inches (39.4 cm)
Height	8.25 inches (21.0 cm)
Weight	35.5 pounds (16.1 kg) (excluding battery pack and cover accessories)

Table 1-2. Electrical Characteristics

Characteristics	Description
MODES **Signal Generator Mode**	
Frequency	
Range:	10 kHz to 999.9999 MHz
Resolution:	100 Hz
Accuracy:	Equal to master oscillator time base
Output (into 50 ohms)	
Attenuator:	16 dB variable plus 10 dB steps over 13 ranges
Range FM:	0.1 µV to 1 Vrms (−127 dBm to +13 dBm)
Range AM:	0.1 µV to 0.4 Vrms
Accuracy:	±2 dB maximum with step attenuator in 10 dB position. ±4 dB maximum in any other state.
Spectral purity	
Spurious:	≤ −40 dB
Harmonics:	≤ −15 dB

Table 1-2. Electrical Characteristics (Cont)

Characteristics	Description
MODES	
Signal Generator Mode	
Frequency modulation	
Range:	0 to 75 kHz peak
Accuracy:	±5% of reading
Residual FM:	20 Hz max. at 300 to 3 kHz from f_c
Residual AM:	1.0% max. at 300 to 3 kHz from f_c
External/internal frequency range:	5 Hz to 20 kHz (±3 dB), 50 Hz to 20 KHz (±1 dB)
External input:	Approximately 150 mV for 20 kHz deviation
Modes:	Internal, external, microphone or all simultaneously
Amplitude modulation	
Range:	0 to 80% from 1 to 500 MHz
Accuracy:	±10% of full scale from 0% to 50% AM
External/internal frequency range:	5 Hz to 10 kHz (±3 dB), 5 Hz to 3 kHz (±1 dB)
External input:	Approximately 150 mV for 80%
Modes:	Internal, external, microphone or all simultaneously
Double sideband suppressed carrier	
Carrier suppression:	−15 dB (1 MHz to 500 MHz)
Sweep Generator Mode	
Adjustable sweep width from 10 kHz to 10 MHz at a fixed sweep rate. Synchronized to internal scope display.	
Monitor Mode	
Frequency	
Range:	1 MHz to 999.9999 MHz
Resolution:	100 Hz
Accuracy:	Equal to that of master oscillator time base
Frequency error indicator	Autoranging CRT display. Resolution ±10 Hz for frequency error measurements on 1.0 kHz, 10.0 kHz and 100.0 kHz full scale ranges. For frequency errors less than 100 Hz, 1 Hz resolution. Special function control will allow direct frequency read-out to 1 Hz resolution.
Input sensitivity (over 4 MHz to 1000 MHz)	1.5 µV for 10 dB EIA SINAD (narrow band ±6 kHz mod. acceptance). 7 µV for 10 dB EIA SINAD (wide band ±100 kHz mod. acceptance). Useable to 1 MHz.
Spurious response	−40 dBc typical 0 dB image at ±21.4 MHz −10 dB at L.O. harmonics ±10.7 MHz
Deviation measurement	
Range:	1, 10, 100 kHz full scale
Accuracy:	±5% of reading
Peak deviation limit alarm:	Set via keyboard to 100 Hz resolution (0 kHz to 99.9 kHz). Audible alarm indicates limit condition and will be active in all Monitor modes.
AM modulation measurement	
Range:	0 to 100%
Accuracy:	±5% of full scale
Signal strength meter	
Range:	1 MHz to 999.9999 MHz
Sensitivity:	−100 dBm to +52 dBm, combined specification of antenna and transceiver ports.
Selectivity:	30 kHz maximum at 3 dB bandwidth.
RF Wattmeter (Autoranging display)	
Frequency range:	1 MHz to 1000 MHz
Power range:	0.1 watt to 125 watts
Accuracy:	±10%, 1 watt to 125 watts
Protection:	Over temp indicator
Scales:	9.99, 99.9, 125 watts

Table 1-2. Electrical Characteristics (Cont)

Characteristics	Description
GENERAL FUNCTIONS	
Spectrum Analyzer	
Dynamic range	75 dB minimum
Frequency	
Range:	1 MHz to 1 GHz
Scan width:	100 kHz per division to 1 MHz per division, continuously adjustable.
Sensitivity:	−95 dBm minimum
Duplex Generator	
Frequency offset	Adjustable from 0 to ±10 MHz in 5 kHz steps, plus fixed offset of ±45 MHz
Frequency resolution	5 kHz
Frequency accuracy	±.002%
Output level	−35 dBm minimum into 50 ohm load
Deviation range	0 to ±20 kHz peak
Frequency response	5 Hz to 20 kHz, ±3 dB
Oscilloscope	
Size	8 cm × 10 cm
Frequency response	DC to 0.5 MHz (3 dB point)
External vertical input ranges	10 mV, 100 mV, 1V, 10V (per division)
Sweep rates	1 µs, 10 µs, 0.1 ms, 1 ms, 0.01S, 0.1S (per division)
Sync	Internal, normal, and automatic mode with adjustable trigger level.
Frequency Counter	
Normal	
Range:	10 Hz to 35 MHz
Readout:	5 digit, autoranging
Input sensitivity:	50 mV minimum
Period counting frequency determination	
Range:	10 Hz to 100 kHz
Display:	4-digit autoranging to 3 kHz, 3-digit autoranging to 100 kHz
Auto tune (SCAN LOCK)	
Range:	In the monitor mode, the unit can automatically find and then tune to an input signal above −30 dBm. Operates from 1 MHz to 1 GHz
Acquisition time:	5 sec. typical to less than 1 sec, if a limited scan is used.
Resolution:	±1 Hz
Digital Voltmeter	
Readout:	Autoranging 3-digit display, 1, 10, 100, 300 volts full scale. AC-dBm calibrated across 600 ohms.
DC accuracy:	±1% of full scale ±1 least significant digit
AC accuracy:	±5% of full scale
AC bandwidth:	50 Hz to 20 kHz
Signaling Sequence Encode/Decode	
Code Synthesizer	
Frequency range:	5 Hz to 19.9999 kHz sinewave encode. 50 Hz to 9999 Hz decode
Resolution:	0.1 Hz
Frequency accuracy:	±0.01%
Distortion:	≤1%
Signaling Sequences	
General Sequence	Encode up to ten tones with frequencies of 5.0 Hz to 19999.9 Hz and durations of 5 msec to 9999 msec. Decode ten tones with frequencies of 300 Hz to 9999 Hz and durations of 15 msec to 9999 msec.
Two Tone A/B (Encode only; use General Sequence to decode)	Tone-Only Sequence Tone and Voice Sequence Two-user programmable (See Figure 1-1 for sequence timing)

Table 1-2. Electrical Characteristics (Cont)

Characteristics	Description
Modulation Source	
5/6 Tone	Digit Frequencies (See Figure 1-2 for sequence timing) 0 – 600 Hz 6 – 1446 Hz 1 – 741 Hz 7 – 1587 Hz 2 – 882 Hz 8 – 1728 Hz 3 – 1023 Hz 9 – 1869 Hz 4 – 1164 Hz R – 459 Hz 5 – 1305 Hz X – 2010 Hz
Mobile Telephone	
IMTS	Complete IMTS base-station simulation.
MTS	(See Figure 1-3 for sequence timing)
2805	(See Figure 1-4 for sequence timing)
Select V	Tone length – 70 ms
ZVEI	Digit Frequencies 1 – 1060 Hz 7 – 1830 Hz 2 – 1160 Hz 8 – 2000 Hz 3 – 1270 Hz 9 – 2200 Hz 4 – 1400 Hz 0 – 2400 Hz 5 – 1530 Hz R – 2600 Hz 6 – 1670 Hz
Modified ZVEI	Tone length – 70 ms Digit Frequencies 1 – 970 Hz 7 – 1670 Hz 2 – 1060 Hz 8 – 1830 Hz 3 – 1160 Hz 9 – 2000 Hz 4 – 1270 Hz 0 – 2200 Hz 5 – 1400 Hz R – 2400 Hz 6 – 1530 Hz
CCIR (100 ms)	Tone length – 100 ms Digit Frequencies 1 – 1124 Hz 7 – 1640 Hz 2 – 1197 Hz 8 – 1747 Hz 3 – 1275 Hz 9 – 1860 Hz 4 – 1358 Hz 0 – 1981 Hz 5 – 1446 Hz R – 2110 Hz 6 – 1540 Hz
CCIR (70 ms)	Tone length – 70 ms Digit Frequencies Same as CCIR (100 ms)
EEA	Tone length – 40 ms Digit Frequencies Same as CCIR
Tone remote access (Encode only; use General Sequence to decode)	Remote base access sequence as follows: Tone A for 150 msec Tone B for 40 msec 10 dB below Tone A Tone A continuously 30 dB below the first Tone A burst
Digital private line (DPL)	Codes 000 to 777 and inverted for encode. Decodes all valid DPL codes.
Fixed 1 kHz	
Accuracy:	Equal to master time base
Distortion:	≤1%
External input	
Microphone:	Standard TMN-6013 microphone interface with IDC.
External Jack	
Frequency range:	5 Hz to 19999.9 Hz
Level:	7 Vrms maximum
Impedance:	10K ohm minimum
Code synthesizer external output level	0 to 3 Vrms into a 600 ohm load

Table 1-2. Electrical Characteristics (Cont)

Characteristics	Description
Distortion/SINAD Meter	
Input frequency:	1 kHz ±1 Hz
Input level range:	0.1V to 10 Vrms
SINAD accuracy:	±1 dB at 12 dB SINAD
Distortion range:	1% to 20%
Distortion accuracy:	±0.5% of Distortion for 1% ≤THD ≤10% ±2% of Distortion for 10% ≤THD ≤20%
Analog Synthesizer Tuning (AST)	
Step size:	Variable steps from 3200 Hz to 3.2 GHz per 360° of rotation.
Calibration:	32 steps per 360° rotation
Time Base	
Standard TCXO	Aging: $\pm 1 \times 10^{-6}$ per year Temp: $\pm 1 \times 10^{-6}$ maximum error over the 0° to 55°C temp range
Optional ovenized high stability	Aging: $\pm 1 \times 10^{-8}$ per year Temp: $\pm 0.05 \times 10^{-6}$ maximum error over the 0° to 55°C temp range (warmup to $\pm 5 \times 10^{-7}$ of final frequency within 20 minutes)
Power and Environmental	
AC	100 to 130 Vac or 200 to 260 Vac, switch-selectable; 47 to 400 Hz
DC	+11.0 to +16 Vdc external input
Optional battery	13.6V battery; 50 minutes typical
Temperature range	0° to 55°C operation; −40° to 85°C storage

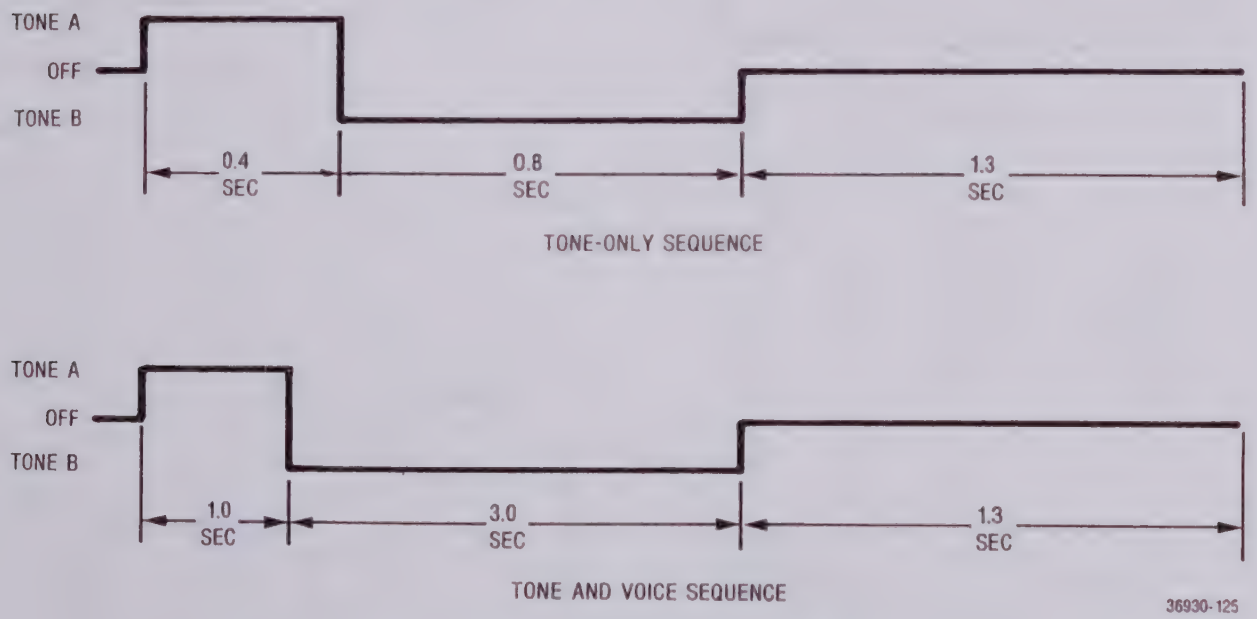

Figure 1-1. Two-Tone (A/B) Sequence Timing

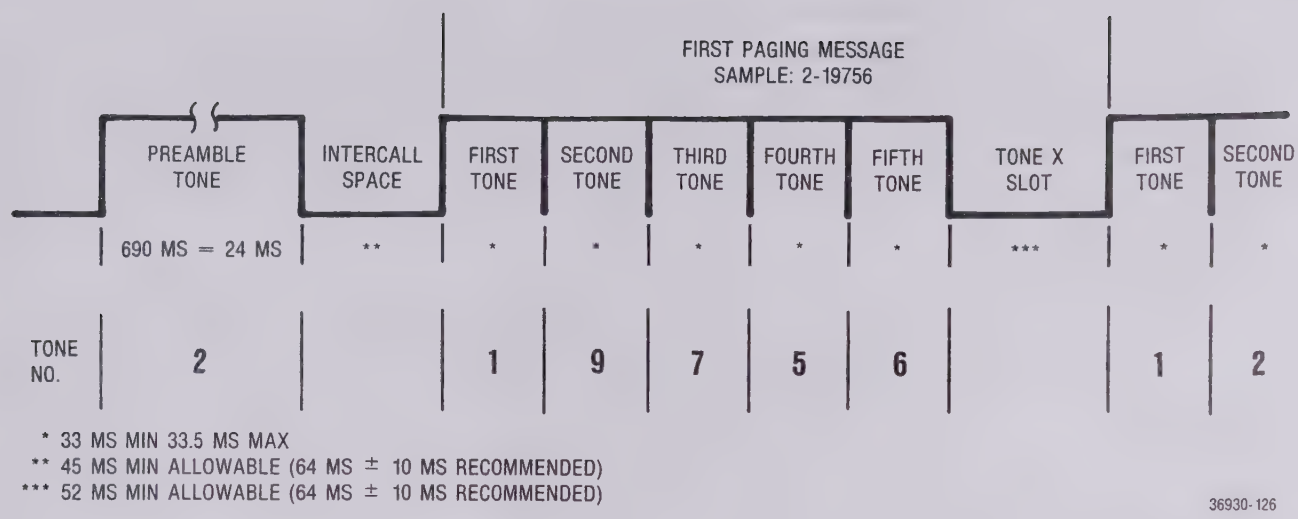

Figure 1-2. 5/6 Tone Sequence Timing

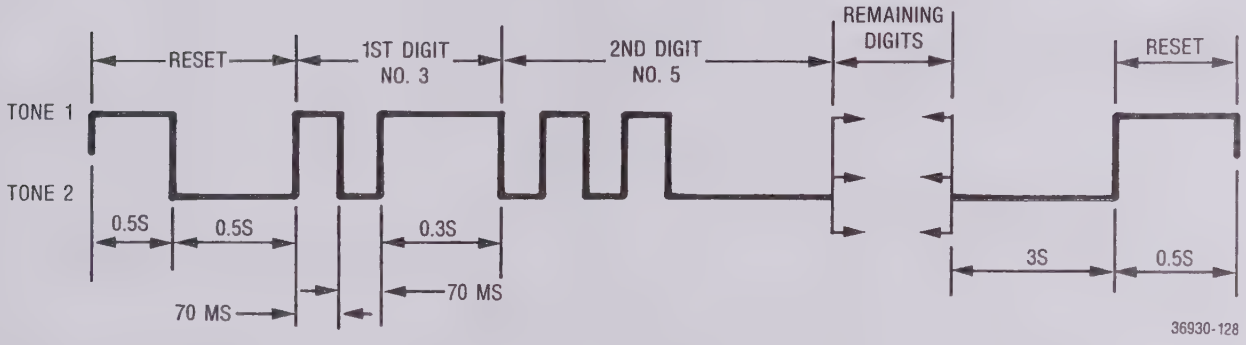

Figure 1-3. MTS Sequence Timing

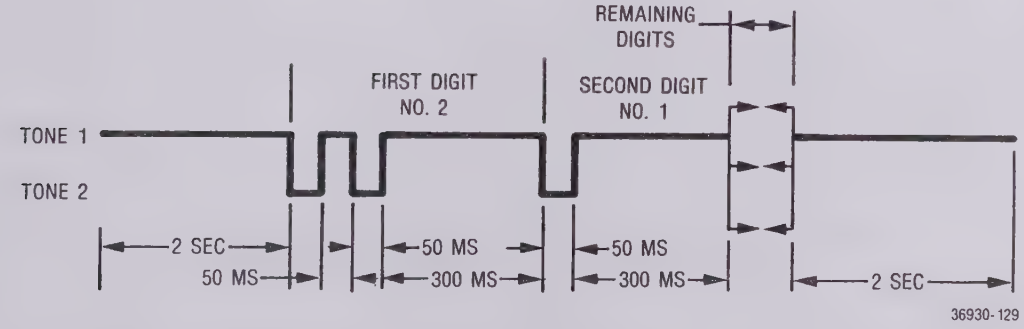

Figure 1-4. 2805 Sequence Timing

Table 1-3. Input/Output Characteristics

Characteristic	Description
Input	
Ext Mod In	10K ohms nominal, 150 mV typical for 20 kHz dev. FM or 80% AM
Mic	Mic input provides bias and IDC limiting suitable for Motorola TMN-6013 handset. PTT switches R2001 from monitor to generate.
Ext Horiz	1 volt minimum for full screen deflection. Maximum input 10 volts.
Vert/SINAD/Dist/DVM/Counter In	1 Meg ohm, 40 pf Nominal; ±300 Vdc max, 300 Vrms max at frequencies below 500 Hz, 10 Vrms max up to 35 MHz • Scope Vert In: dc to 500 kHz or 50 Hz to 500 kHz ac mode (±3 dB) • Distortion/SINAD In: 0.1 to 10 Vrms in at 1 kHz • DVM In: 1, 10, 100 and 300V full scale ac (true rms) or dc. AC bandwidth 50 Hz to 20 kHz for ±5% F.S. accuracy (ac dBm calibrated across 600 ohms) • Frequency Counter In: 50 mV or greater required from 10 Hz to 35 MHz
RF In/Out	50 ohms nominal, 125 watts max (1 to 1000 MHz)
ANTENNA	50 ohms nominal, 50 mW max (1 to 1000 MHz). Fuse protected.
Ext Wattmeter	Characteristics suitable for Motorola ST-1200 series Wattmeter Elements
10 MHz STD In (rear panel)	70 to 350 mVrms input required at 10 MHz, impedance greater than 50 ohms.
Output	
Mod Out	Up to 11 Vp-p into 600 ohms 5 Hz to 20 kHz
Demod Out	Typically 10 Vp-p into 600 ohms for ±5 kHz deviation narrowband, 15 Vp-p for ±75 kHz deviation wideband. DC to 20 kHz response
RF In/Out	1.0 Vrms (+13 dBm) to 0.1 μVrms (−127 dBm) 50 ohm nominal source impedance. 10 kHz to 1 GHz.
Duplex Gen Out	−35 dBm typical, 50 ohm nominal source impedance 1 MHz to 1 GHz
10 MHz STD Out (rear panel)	250 mVrms nominal output into 50 ohms

1.2 MAJOR ASSEMBLIES

Should it break down, the Communications System Analyzer is designed to be serviced quickly and easily. The majority of the circuitry is on 12 modular, plug-in circuit boards which have built-in test points. These test points help in locating the problem to a specific board. Simple plug-in replacement gets the instrument back in service.

A list of all subassemblies is given in Table 1-4. The assembly locations are shown in Figures 1-5 and 1-6.

Table 1-4. List of Subassemblies

Ref. Des.	Item	Part Number As Labeled	Replacement Order Part No.
A1	High-Voltage Power Supply	01-P22010E001	RTP-1007A
A2	Scope Amplifier Board	01-P22020E001	RTC-1005A
A3	Battery Charger Board	01-P22030E001	RTP-1008A
A4	Control Board	01-P22040E001	RTP-1009A
A5	Output Board	01-P22050E001	RTP-1010A
A6	Switcher Board	01-P22060E001	RTP-1011A
A7	Scope/DVM Control Board	01-P22070E001	RTC-1006A
A8	Receiver Board	01-P22080E001	RTL-1019A
A9	RF Synthesizer Module	01-P22090E001	RTC-1007A
A9A1	Reference and Control Board	01-P22210E001	RTC-4039A
A9A2	310 to 440 - MHz Loop Board	01-P22220E001	RTC-4040A
A9A3	Synthesizer Output Board	01-P22230E001	RTC-4041A
A9A4	60.5-MHz Loop Board	01-P22240E001	RTC-4042A
A9A5	GHz Loop Board	01-P22250E001	RTC-4043A
A9A6	640-MHz Loop Board	01-P22260E001	RTC-4044A
A9A7	Synthesizer Motherboard	01-P22270E001	RTC-4045A
A10	Audio Synthesizer Board	01-P22100E001	RTC-1008A
A11	Processor Interface Board	01-P22110E001	RTC-1009A
*A12	Option Slot	–	–
*A13	Option Slot	–	–
A14	Processor Board	01-P22140E001	RTC-1010A
A15	Front-Panel Interface Board	01-P22150E001	RTC-1011A
A16	Frequency-Standard Interface Board	01-P22160E001	RTL-1020A
A17	RF Input Module	01-P22170E001	RTL-1021A
A17A1	RF Wattmeter Board	01-P22280E001	RTL-4158A
A17A2	Wideband Amplifier Board	01-P22290E001	RTL-4156A
A17A3	Duplex Generator Board	01-P22300E001	RTL-4157A
A18	Front Panel Assembly	01-P22180E001	Not Assigned
A19	System Motherboard	01-P22190E001	Not Assigned
Option A	Cellular Tel Test Board	01-P22120E001	RTC-1012A
Option B	IEEE/Remote Interface Board	01-P22130E001	RTC-1013A
Option C	Secure Comm Board	01-P23360K001	
Option D	Trunked Radio Test Board	01-P29000H001	

*Options A thru D can be placed into either Option Slot.

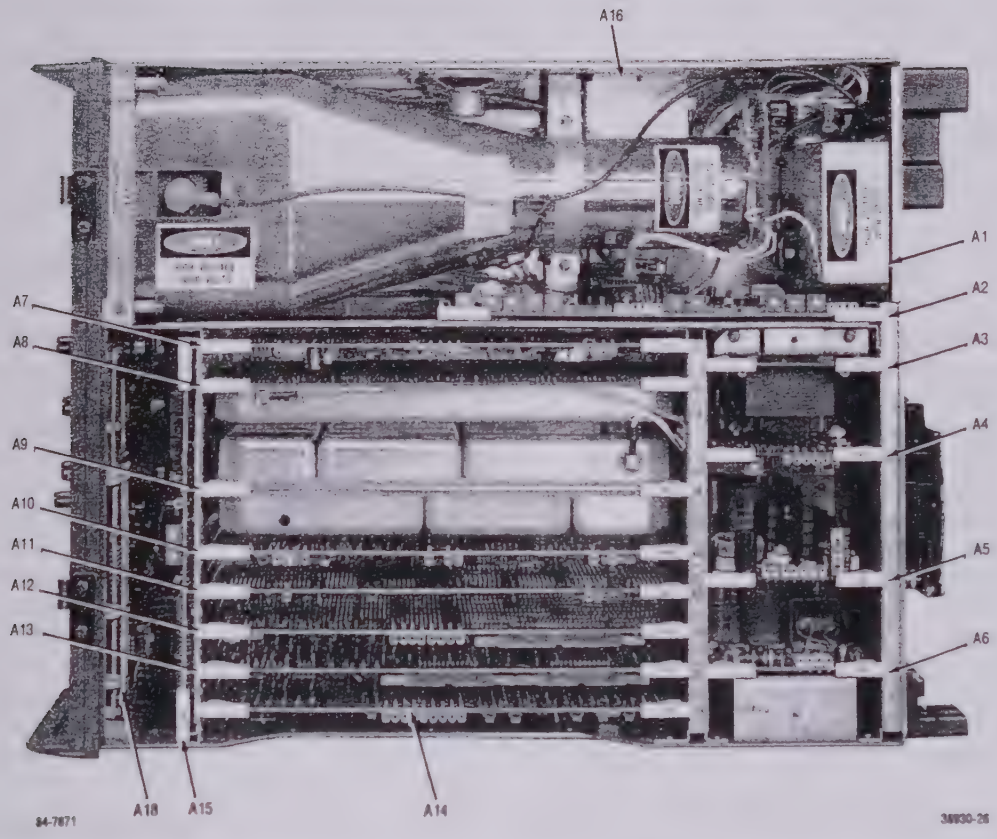

Figure 1-5. Communications System Analyzer — Top View, Cover Removed

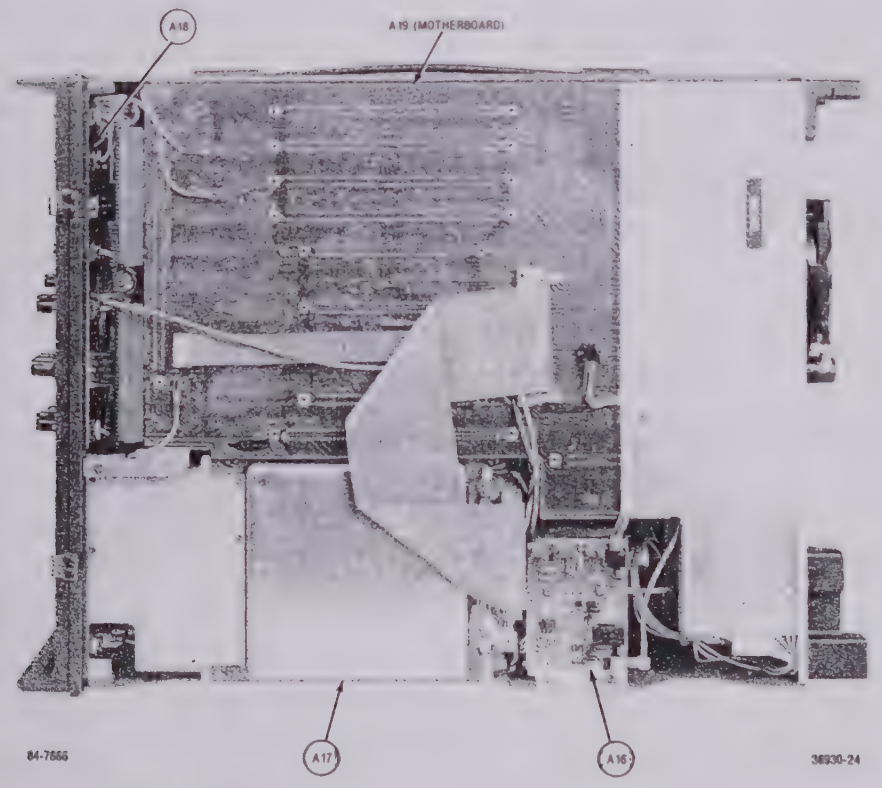

Figure 1-6. Communications System Analyzer — Bottom View, Cover Removed

SECTION 2.
SYSTEM THEORY OF OPERATION

2.1 DESCRIPTION

The Communications System Analyzer can perform nine basic functions: it can act as a generator, a wattmeter, a monitor, a duplex generator, a code synthesizer, a frequency counter, a digital voltmeter (DVM), an oscilloscope, and a distortion/SINAD meter. Measurements can be printed out via the Printer Port. General operation of the unit will simultaneously incorporate all these functions.

The following discussion will cover the block diagrams for each of the basic functions plus a discussion on the processor control of the system. A functional block diagram of the total system is shown at the end of the section in Figure 2-1. To clarify the total system configuration, only the major signal paths between each of the modules are shown.

2.2 SYSTEM CONTROL

2.2.1 PROCESSOR

System control is the primary responsibility of the internal microprocessor. To control the operating mode, the processor manipulates inputs from front-panel controls and system-status inputs. From the front panel, the processor monitors the keyboards, the function-select switch, the modulation-control switch, the RF-scan switch, the image switch, the bandwidth switch, the horizontal and vertical range switches, and the step-attenuator switch. This information, plus internal status information, causes the processor to display the appropriate information on the CRT, to program the center frequency, to set up the generate or monitor mode, and to make the internal switching arrangements for the selected operating state.

2.2.2 PROCESSOR BUS

The interface to and from the microprocessor is via the processor bus. This bus consists of a 16-bit address bus, an 8-bit data bus, and a 7-bit control bus. The bus interfaces the processor to its program memory (ROM), scratch pad memory (RAM), IEEE interface option, cellular mobile telephone option, RS-232 option, Trunking option, Secure options, and the peripheral-interface adapters (PIA). The PIA is the mechanism by which the processor interfaces with the system. A PIA consists of a dual 8-bit latch which may be programmed as either an input or an output for the microprocessor. System input and control information passes to and from the microprocessor via three system control busses attached to a PIA, which is located on the Processor Interface board (A11).

2.2.3 CONTROL BUSSES

The three control busses within the System Analyzer are called the RF control bus and AF control busses 1 and 2. The AF control busses consist of a 4-bit address bus, a 4-bit data bus, and two enable lines. The four address bits determine which of 16 possible latches the four bits of data are to be sent to or received from. The enable lines trigger the actual transfer of data. The RF control bus is a clocked serial bus which consists of five data lines, a clock line, and a latch line. The serial data stream is 24 bits long. Tables 2-1 through 2-6 show the busses and the function of each bit. Figure 2-2 at the end of the section shows the overall bus structure of the System Analyzer.

Table 2-1. AF BUS Control

DATA	AF BUS #1				AF BUS #2			
ADRS	D3	D2	D1	D0	D3	D2	D1	D0
0	AUDIO SYNTH BITS 0-3				Display LEDs			
1	AUDIO SYNTH BITS 7-4				Function LEDs			
2	AUDIO SYNTH BITS 11-8				Mode LEDs			
3	AUDIO SYNTH BITS 15-12				INPUT SCOPE ATTENUATION			
					0.001	0.01	0.1	1.0
4	PL SELECT	DPL CLOCK ENABLE	DPL SELECT	AUDIO SYNTH BIT 16	(MON +DSB) /GEN SELECT	$\overline{\text{OFFSET}}$ $\overline{\text{ATTEN}}$ ENABLE	ATTEN INT/EXT SELECT	EXT IN AC/DC SELECT
5	MOD TO SPEAKER ENABLE	AUDIO ATTEN 30 dB	AUDIO SYNTH BIT 17	AUDIO ATTEN 10 dB	RF ATTENUATOR POSITION			
6	DPLX MOD ENABLE	DSBSC MOD ENABLE	FM MOD ENABLE	AM MOD ENABLE	RF OVER TEMP	$\overline{\text{WB SIG}}$ $\overline{\text{PRESENT}}$	ANT SELECT	SPARE INPUT
7	BINARY MOD ENABLE				$\overline{\text{IF}}$ $\overline{\text{OVERLOAD}}$	SIGNAL PRESENT	OFFSET ON/OFF	WB/NB
8	DVM MODE SELECT				$\overline{\text{CSSG}}$ $\overline{\text{CONT}}$ $\overline{\text{EN}}$	$\overline{\text{CSSG}}$ $\overline{\text{BURST}}$ $\overline{\text{EN}}$	IMAGE HI/LO	MON/GEN
	SIGNAL STRENGTH	DV2	DV1	DV0				
9	SCOPE TRIGGER ENABLE	PK DET FM MOD ENABLE	PK DET AM MOD ENABLE	PK DET DEMOD ENABLE	SCOPE VERTICAL SWITCH POSITION			
					$\overline{\text{10V/DIV}}$	1V or 25 kHz/ $\overline{\text{DIV}}$	0.1V or 2.5 kHz/ $\overline{\text{DIV}}$	0.01V or 0.25 kHz/DIV
A	DIST NOTCH FILTER X1/×10	INT DVM ×0.1 ENABLE	WB/NB SELECT	ALARM ENABLE	SPARE INPUT	SCOPE HORIZONTAL SWITCH POSITION		
B	HORIZ SCOPE MODE SELECT		VERT SCOPE MODE SELECT					
C	ANTENNA ENABLE	MOD TO SCOPE DISABLE	EXT/ DISTORTION SELECT	0.01-1/ 1-10 SWEEP SELECT				
D		SCOPE TIME BASE CONTROL			PERIOD/ FREQ SELECT	COUNTER/ DVM SELECT	SPARE OUTPUT	SPARE OUTPUT
		C2	C1	C0				
E					DVM RMS/DIR SELECT	COUNTER RANGE		
F						COUNTER INPUT SELECT		
						IF/BFO		EXTERNAL

Table 2-2. RF BUS Control

BIT	CONWD1	CONWD2	CONWD3	CONWD4*	CONWD5
0				0.5-1 GHz EN	
1				GHz LOOP SENSE	
2				VCO SELECT	
3				300-350 CLAMP	
4				350-500 MHz EN	
5	MOD CONT A	MOD ×2/×1	MOD SENSE	0.01-250 MHz EN	SW1
6	MOD CONT B	BW CONT	MOD CONT C	250-350 MHz EN	SW2
7	÷N MSB	÷N MSB	÷N MSB	WB AMP HI/LO	÷N MSB
8	↑	↑	↑	R0 $\overline{\text{AM/FM/CW CRT EN}}$	↑
9				R1 $\overline{\text{WB DET EN}}$	
10	24 MHz	60 MHz	310-440 MHz	R2 $\overline{\text{NBFM GAIN ×10}}$	DUPLEX
11	LOOP	LOOP	LOOP	R3 SPARE	GENERATOR
12	CONTROL	CONTROL	CONTROL	R4 $\overline{\text{SPARE}}$	CONTROL
13				R5 $\overline{\text{SPKR EN}}$	
14				R6 $\overline{\text{BIT 12}}$	
15	↓	↓	↓	R7 DEMOD INV	↓
16	÷N LSB	÷N LSB	÷N LSB	R8 $\overline{\text{WB/NB}}$	÷N LSB
17	÷A MSB	÷A MSB	÷A MSB	R9 $\overline{\text{LPFL 300}}$	÷A MSB
18	↑	↑	↑	R10 $\overline{\text{LPFL 3K}}$	↑
19				R11 $\overline{\text{HPFL 3K}}$	
20				R12 $\overline{\text{HPFL 300}}$	
21				R13 $\overline{\text{AM EN}}$	
22				R14 $\overline{\text{FM EN}}$	
23	÷A LSB	÷A LSB	÷A LSB	R15 $\overline{\text{SSB EN}}$	÷A LSB

*Note: Functions with bar over top are active low.
Bits 0-7 of CONWD4 are RF Synthesizer control bits.
Bits 8-23 of CONWD4 are Receiver control bits.

Table 2-3. MOD Control

A	B	C	BW CONT	Function
0	0	0	0	SWEEP
0	1	1	0	NARROW MOD
1	0	1	0	WIDE MOD
1	1	1	1	MOD INHIBIT

Table 2-4. Receiver Control

R0	R1	R2	R8	R13	R14	R15	Function
0	1	1	1	0	1	1	AM WB
0	1	1	0	0	1	1	AM NB
0	1	1	1	1	1	0	CW/SSB WB
0	1	1	0	1	1	0	CW/SSB NB
0	1	1	1	1	0	1	FM WB
0	1	0	0	1	0	1	FM NB
0	0	X	X	1	1	1	WB DET

Table 2-5. Duplex Control

SW1	SW2	Function
0	0	0-10 MHz
1	0	45 MHz
1	1	OFF

Table 2-6. Receiver Filters

Low-Pass			High-Pass			
R9	R10	FREQ	R6	R11	R12	FREQ
0	1	300 Hz	0	1	1	5 Hz
1	0	3 kHz	1	1	0	300 Hz
1	1	20 kHz	1	0	0	3 kHz

2.3 GENERATE MODE

2.3.1 DESCRIPTION

The generate mode provides a variable-level RF output that is phase-locked to the internal 10-MHz standard. AM, FM, and sideband modulation is possible on the output signal.

A block diagram of the generate mode is shown at the end of the section in Figure 2-3.

2.3.2 FREQUENCY STANDARD

To provide a 10-MHz signal to the EXTERNAL 10 MHz OUTPUT and to the RF Synthesizer module (A9), the Frequency-Standard Interface board (A16) contains a 10-MHz crystal oscillator with buffering and switching. An external 10-MHz standard signal can be used by switching the IN/OUT switch on the bottom panel to IN. The signal applied to the 10-MHz STD input/output port on the back is then routed through the A16 board to the A9 module.

2.3.3 RF SYNTHESIZER

The RF Synthesizer uses the 10-MHz standard signal for its phase-locked-loop reference frequencies and also converts the 10-MHz standard signal to a TTL level for system use. The RF Synthesizer consists of a fixed 640-MHz loop and a programmable GHz loop. The programming of the GHz loop is provided by the RF CONTROL BUS from the processor. The Synthesizer Output board chooses one of three possible outputs for the SYNTH RF output signal. The first is directly from the GHz loop. The second is the output of the divide-by-two on the GHz loop, which provides frequencies from 250 to 500 MHz. For outputs below 250 MHz, the output of the GHz loop is mixed with the fixed 640-MHz signal, and the difference signal is used for the output. To obtain outputs from 10 kHz to 250 MHz, the processor programs the GHz loop for frequencies between 640.01 and 890 MHz, respectively.

FM and sweep modulation is also implemented in the GHz loop by modulating its 60.5 MHz reference. The Audio Synthesizer board (A10) supplies the FM modulation signal, which provides modulation frequencies from 5 Hz to 20 kHz. FM capability is 100 kHz peak deviation. The Scope/DVM Control board (A7) supplies the sweep-modulation signal. The sweep capability, 10 MHz, is used for both the sweep-generator and the spectrum-analyzer functions.

2.3.4 WIDEBAND AMPLIFIER

The SYNTH RF signal is amplified and leveled in the RF Input module (A17) by the Wideband Amplifier (A17A2). The signal level at the output of the Wideband Amplifier is detected and compared to the AM MOD + DC REF signal from the front panel's level control. If there is a difference between the two signal levels, the ALC amplifier provides an error voltage. This error voltage controls the attenuation of the voltage-controlled attenuator (VCA) in the direction that will make the detected RF output equal to the AM MOD + DC REF signal. There are two possible VCAs for the output leveling. The VCA on the Wideband Amplifier board is used for frequencies from 1 to 1000 MHz. For frequencies below 1 MHz, the VCA on the Processor Interface board (A11) is set to minimum attenuation, and the VCA on the RF Synthesizer module (A9) does the leveling. Amplitude modulation is incorporated by summing the modulation signal with the dc reference signal, thus forcing the leveling loop to vary the output level in proportion to the modulating signal. The signal from the RF-level detector (CARRIER + MOD LVL) is used by the processor to determine the RF output level and the percent AM. The leveled output range of the Wideband Amplifier is from −3 dBm to +13 dBm (0.16 to 1.0 Vrms).

The leveled output from the Wideband Amplifier is applied to the Generate/Monitor switch. For generating AM, FM, and CW signals, the switch connects the Amplifier output to the step attenuator. For double sideband-suppressed carrier (DSBSC) generation, the Wideband Amplifier output is connected to the local-oscillator (L.O.) port on the receive mixer, and the attenuator is connected to the RF port. The DSBSC modulation signal then drives the IF port of the mixer, giving a DSBSC signal at the RF port and thus at the step attenuator. For monitor mode, the Wideband Amplifier output is connected to the L.O. port on the receive mixer, and the attenuator is connected to the RF port. The difference-frequency output of the receive mixer is sent to the Receiver board through the 10.7 MHz IF output.

2.3.5 STEP ATTENUATOR

Level control in 10-dB increments is provided by the step attenuator. The total range of the attenuator is from 0 to 130 dB. For the basic System Analyzer, the step attenuator is controlled directly by a knob on the front panel. With the IEEE control option (A13), the step attenuator is electrically programmable and controlled by the processor. In this case, the knob on the front panel is connected only to a rotary switch which directs the processor in setting the attenuation level. Under IEEE control, commands coming via the IEEE bus determine the attenuator setting.

2.3.6 INPUT/OUTPUT

The step attenuator is connected to the output port relay, which chooses between the Antenna or RF In/Out port. There is a 30-dB difference between these two ports. The Antenna port is for receiving low-level signals (less than 100 mW) and for generating high-level signals (+13 dBm). The RF In/Out port is for receiving high-level signals, with a maximum of 125W.

2.4 WATTMETER

Input power measurements from 1 to 125W are made only through the RF In/Out port. (To measure the power of signals under 1W, see paragraph 2.5, MONITOR MODE.)

A block diagram of the wattmeter is shown at the end of the section in Figure 2-4.

The RF input signal is first attenuated by a 14-dB attenuator and then is loaded with a 50-ohm, 16-dB attenuator. A sample of the input RF voltage between the two attenuators is detected by the power detector, to give a dc output proportional to the peak RF voltage. The amplifier following the detector buffers and amplifies the detected voltage to provide the RF INPUT POWER signal to the processor. The processor then determines and displays the RF input power.

A temperature sensor located near the flange of the RF load alerts the processor when the load temperature exceeds 80°C. The processor responds to the OVER TEMPERATURE signal by displaying a warning message on the CRT and by sounding the audible alarm.

2.5 MONITOR MODE

2.5.1 DESCRIPTION

In monitor mode, RF signals from an antenna or from a transmitter can be checked directly for frequency error, signal strength, modulation level, and spectral content. Also provided is off-the-air decoding of two-tone or 5/6-tone paging, private line (PL), digital private line (DPL) or mobile telephone signaling. Another feature is Scan Lock, which allows the System Analyzer to acquire a received signal of greater than −30 dBm.

A block diagram of the monitor mode is shown at the end of the section in Figure 2-5.

2.5.2 RF INPUT

For signals less than 100 mW, the RF signal to be monitored is applied to the Antenna port; for signals greater than 100 mW, to the RF In/Out port. The port-select switch routes one of these signals to the step attenuator.

In the monitor mode, the RF input from the step attenuator is connected to the RF port on the receive mixer. The output from the Wideband Amplifier is switched to the L.O. port on the receive mixer. The processor programs the RF Synthesizer for an output frequency that is offset 10.7 MHz from the frequency to be monitored. The offset may be above or below the center frequency, as selected by the front panel's Image switch. The 10.7-MHz difference signal at the IF port of the receive mixer is filtered by a 20-MHz low-pass filter. The filter output provides the 10.7-MHz IF signal to the Receiver board (A8). The overall gain of the RF Input module (A17) is −8 dB ±2 dB.

2.5.3 RECEIVER

The 10.7-MHz IF signal is first filtered and amplified on the Receiver board, providing a bandwidth of 280 kHz. This signal is split between the linear IF and the logarithmic IF by an active power splitter. The linear IF provides for demodulation of AM, FM, and SSB signals. The logarithmic IF provides two functions: spectrum analyzer and signal-strength indicator.

2.5.3.1 Linear IF

The linear IF bandwidth is determined by a wide/narrowband filter which follows the power splitter. The modulation-acceptance bandwidths are ±6 kHz for narrowband and ±100 kHz for wideband. Next, the IF signal is down-converted to 700 kHz by an active AGC'd mixer. Immediately following the second mixer is the 700-kHz second IF amplifier. The output level of the amplifier is rectified to detect amplitude modulation and to provide AGC control on the second IF amplifier, the second mixer, and the delayed-AGC amplifier. The second IF signal is applied to the FM demodulator and to the BFO mixer for SSB demodulation. The L.O. signal for the BFO mixer comes from a 700-kHz (±3 kHz) oscillator on this board. This oscillator is controlled from the front panel.

Demodulated audio from the AM, FM, or SSB demodulator is routed to the audio filters by the audio-select switch, which is under processor control. The audio filters consist of a selectable-bandwidth low-pass filter (300 Hz, 3 kHz, or 20 kHz), and a selectable-bandwidth high-pass filter (300 Hz or 3 kHz). The selected demodulator output is used to provide three receiver outputs: 1) The VOL CONTROL AUDIO signal is the unfiltered version of the selected demodulator output. It goes to the Volume control on the front panel, to an amplifier on the Scope/DVM Control board (A7) and finally to the speaker; 2) The DEMOD CAL AUDIO output is the filtered version of the demodulator output and provides calibrated audio levels for determining modulation level; 3) The DEMOD OUT signal is also a filtered version of the demodulator output and drives the front panel's DEMOD OUT port.

2.5.3.2 Logarithmic IF

The 10.7-MHz IF input signal is down-converted to 460 kHz by mixing the input signal with the 10.24-MHz signal from a second local oscillator. The second local oscillator is provided by a crystal oscillator on the Receiver board. Two outputs are provided by the logarithmic amplifier and detector. These outputs provide a dc voltage that is proportional to the logarithm of the 10.7-MHz IF input level. One output, SPECTRUM ANALYZER VOLT, is the vertical input to the scope for the spectrum-analyzer display. The other output, SIG STRENGTH VOLTAGE, is measured by the digital voltmeter (DVM) on the Processor Interface board (A11) to provide the signal strength (in dBm) of the 10.7-MHz IF input signal. The logarithmic amplifier has a dynamic range of approximately 80 dB, covering input levels from −110 to −30 dBm.

2.5.3.3 Signal-Present Detector

During Scan Lock operation, a wideband-signal detector indicates the presence of a signal within 20 MHz of the L.O. frequency. The 10.7 MHz IF input is amplified and applied to a diode detector. When the signal level is above about −30 dBm and within 20 MHz of the L.O. frequency, the WB SIG PRES output goes low, indicating signal presence.

2.5.3.4 Frequency-Error Indicator

One of three signals internal to the Receiver may be switched to the IF/BFO output for use in frequency-error indication. During AM and FM monitor operation, the limited, linear IF output is selected and routed to the frequency counter on the Processor Interface board (A11). The difference between this frequency and 700 kHz is computed by the processor and displayed as frequency error. During SSB monitor operation, the BFO output is switched to the IF/BFO output. The difference between this frequency and 700 kHz is computed and displayed as BFO error. During Scan Lock operation, the wideband-signal detector's output is switched to the IF/BFO output. The frequency of this signal is equal to the difference between the RF input frequency and the L.O. frequency.

2.6 DUPLEX GENERATOR

Simultaneous generate and monitor functions are available with the Duplex Generator. The frequency spread between generate and monitor frequencies is limited to a range of 0 to 10 MHz and a fixed frequency of 45 MHz.

A block diagram of the Duplex Generator function is shown at the end of the section in Figure 2-6.

The Duplex Generator signal is generated by mixing the L.O. signal for the first receive mixer with a signal from the offset phase-locked-loop (PLL). The frequency of the offset PLL equals the desired spread between generate and monitor frequencies, minus the 10.7-MHz IF offset. The monitor function is unaffected by the Duplex mode and operates as described in paragraph 2.5.

Frequency modulation of the Duplex output is obtained by modulating the offset PLL via the OFFSET MOD signal line. The OFFSET MOD signal is generated on the Audio Synthesizer board (A10). The offset PLL is controlled via the RF CONTROL BUS.

2.7 CODE SYNTHESIZER

Three simultaneous modulation sources are possible with the internal code synthesizer. The levels of a private line (PL) or digital private line (DPL) source, a fixed 1-kHz source, and external modulation sources can be individually controlled and summed together to give the composite modulation signal. The code synthesizer provides the modulation source for the system in the generate mode and can be used as an audio frequency source. For the IEEE option, modulation levels can be controlled by the processor.

A block diagram of the code synthesizer is shown at the end of the section in Figure 2-7.

The PL signaling-sequence is generated by an audio synthesizer with an output frequency range from 5 Hz to 20 kHz in 0.1-Hz steps. The frequency is programmed by the processor in response to the operator's request from the keyboard through the CRT display. The programmable attenuator following the audio synthesizer provides attenuation levels of 10 dB and 30 dB for the Tone-Remote-Access Sequence.

DPL code words are generated by the processor in response to the code entered by the operator. The 23-bit DPL word is stored in the DPL generator and continuously output when selected. Either PL or DPL signals are switched to the code synthesizer level control (Code Synth Lvl) on the front panel.

A 1-kHz reference signal from the RF Synthesizer is bandpass-filtered to provide a low distortion, 1-kHz sinewave to the front panel's 1 KHz Level control.

Two sources of external modulation are possible through two ports on the front panel: a standard Motorola microphone-interface port and a BNC port. The microphone input (Mic) is connected to an instantaneous deviation-control (IDC) circuit for peak-limiting. The composite of the two external modulation sources is the signal which goes to the Ext Level control on the front panel.

On systems without one of the Remote options, the wipers of the level-control potentiometers will be jumpered from their respective inputs to the summation amplifier on the Audio Synthesizer board (A10). On those systems with one of the Remote options, select switches on the IEEE/RS-232 Interface board send either the tops of the level controls (Code Synth, 1 KHz, or Ext) or their respective wipers to the programmable attenuators. For remote control, they select the tops; for local control, the wipers. During the Remote control mode, the processor-controlled programmable attenuator on the IEEE/RS-232 board controls the modulation level. For the local mode, the attenuators are programmed for zero attenuation so that the wipers of the level control set the modulation levels directly.

The three modulation sources are summed together on the Audio Synthesizer board according to what is set on the level controls. This composite modulation signal is applied to 1) the appropriate modulator, 2) the modulation-measuring circuitry (MOD CAL AUDIO), 3) the audio amplifier (SPKR AUDIO) and 4) the front panel's modulation output port (Mod Out). To provide a low-impedance output, the signal to the front panel's port is driven by a buffer amplifier.

For AM, the composite modulation is summed with +5 Vdc. This signal (5V + AM MOD) is applied to

the top of the front panel's RF Level control. The wiper of the RF Level control is then applied to the AM MOD + DC REF input of the Wideband Amplifier board (A17A2). The dc component on this input controls the average power output, and the ac component provides AM. On systems under Remote option control, the wiper of the RF Level control is connected to a programmable attenuator on the IEEE/RS-232 Interface board and then to the AM MOD + DC REF input of the Wideband Amplifier. This allows remote control of the RF output power.

2.8 FREQUENCY COUNTER

Three possible signal sources can be connected to the frequency counter. Two of the signals are internal to the system: one is used to determine the error frequency of the monitored carrier (IF/BFO), and the other is used to decode the off-the-air signal sequences. The third input is from the external input port (Counter In) on the front panel.

A block diagram of the frequency counter is shown at the end of the section in Figure 2-8.

The Receiver's (A8) DEMOD CAL AUDIO output, which is used for signal-sequence decoding, is routed through a gain-selectable amplifier and the Scope/DVM Control board (A7) and to the Front-Panel Interface board (A15). A switch on the Front-Panel Interface board routes this signal or the signal from the front panel's external input port to the range attenuator. The range attenuator provides stepped sensitivity settings according to the setting on the front panel's vertical range switch. An amplifier following the range attenuator amplifies and limits the signal amplitude for the frequency-counter input.

A select switch on the Processor Interface board (A11) routes either the frequency-counter output from the Front-Panel Interface board or the IF/BFO output from the Receiver to the frequency-counter circuitry. The signal selected is determined by the system's operating mode and controlled by the processor.

The frequency counter uses two different measuring techniques: the direct count and the reciprocal count. A 16-bit gated accumulator is used in the direct-count method to determine the input frequency. Gate times from 1 msec to 10 sec are user-selectable or automatically selected by the processor to give the maximum possible resolution. The gate times are derived from the SYNTH 1 KHz signal coming from the Audio Synthesizer board (A10).

The same 16-bit accumulator is used in the reciprocal-count method. The accumulator counts the number of clock cycles coming from a clock generator during one period of the unknown signal. Clock rates from 10 MHz to 100 kHz are user-selectable or automatically selected by the processor to give the maximum possible resolution. The clock rates are derived from the SYNTH 10 MHz signal coming from the RF Synthesizer module (A9).

The 16-bit frequency-counter output is transferred directly to the processor bus through a peripheral-interface adapter (PIA). The processor, in turn, adjusts the data for the gate time used and then processes the information to obtain the required frequency display.

2.9 DIGITAL VOLTMETER (DVM)

The DVM circuitry allows the processor to access many voltages throughout the system. From this information, the processor is able to determine and display parameters such as output power level, modulation level, input power level, etc. In addition, an external voltage applied to the DVM input port on the front panel can be measured and displayed.

A block diagram of the DVM function is shown at the end of the section in figure 2-9.

Internal voltage measurements are selected and ranged over two decades by the internal DVM-select switch and the X1.0/X0.1 attenuator, respectively, on the Scope/DVM Control board (A7). The resulting 0 to 1-Vdc signal is routed to the internal/external DVM-select switch on the Processor Interface board (A11) which applies the voltage to the A/D converter. The A/D converter converts the input voltage into a 10-bit digital number which is input to the processor. One of eight internal voltages may be selected for measurement as required by the processor to determine display data. Inputs to the A/D must be less than 1 Vdc; therefore, with the decade-ranging attenuator (X1.0/X0.1), the maximum input voltage to the internal DVM is 10 Vdc. The X1.0 position gives improved resolution for reading voltages less than 1 Vdc. To keep CRT information current, each of the required measurements is made in sequence, at an approximate rate of thirty per second.

The following signals can be connected to the DVM input:

- Two modulation signals (MOD CAL AUDIO and CARRIER + MOD LVL) and a demodulated signal (DEMOD CAL AUDIO) are made available to the peak detectors. Measuring the positive and negative peaks of the selected signal enables the processor to determine the level of modulation.
- A low-pass filter (LPFL) removes the ac component from the CARRIER + MOD LVL signal so that the output level of the generated RF can be determined. (See paragraph 2.3.4.)
- The SIG STRENGTH VOLTAGE line from the logarithmic amplifier on the Receiver board (A8) provides a dc level proportional to the strength in dBm of the on-channel received signal.
- The RF INPUT POWER signal line from the RF Input module provides the processor input for the internal wattmeter (paragraph 2.4). Inputs for the external wattmeter element (EXT FWD PWR and EXT RFL PWR) from the front panel's port provide the information for the external-wattmeter display.

- A signal line (DC IN) from the rear panel's dc-input port (DC POWER) is brought to the processor to determine battery voltage. The voltage is attenuated by a factor of 10 to stay with the 10V maximum input to the select switch. The processor uses the battery-voltage measurement to warn the operator when the battery is near its discharged state.
- A rectified and filtered version of the input to the 1-kHz notch filter is the last internal measurement point. This measurement is used in calculating the distortion/SINAD reading. (For further information on the distortion/SINAD meter, see paragraph 2.10.)
- In the external DVM mode, voltages applied to the external DVM input port on the front panel are ranged by processor-control over four decades on the Front-Panel Interface board (A15). The result is a 0 to 1-Vrms signal at the output of the attenuator for inputs of 0 to 300 Vrms. The signal is routed directly through the A7 board by the rms/distortion-select switch to the rms-to-dc converter on the A11 board. It is then routed through the internal/external DVM-select switch, to the A/D converter, and finally to the processor's data bus.

For external dc measurements, the ac/dc-select switch chooses the dc-coupled path from the DVM input port. A low-pass filter on the A15 board removes ac components. The rejection of the low-pass filter at 50 Hz is at least 20 dB. The rms-to-dc converter reads the absolute value of the dc input, and the sign detector provides polarity information.

For ac voltage measurements, the low-pass filter is reprogrammed for less than 1% attenuation out to 20 kHz. The ac/dc-select switch chooses the ac-coupled path, and the rms-to-dc converter converts the ac input into a dc voltage equal to the rms voltage of the input.

2.10 DISTORTION/SINAD METER

The System Analyzer can measure the distortion of a signal with a fundamental frequency of 1 kHz. As the block diagram (Figure 2-9) shows at the end of the section, the 1-kHz input enters the DVM input port through the ac-coupled path and is ranged to between 0 and 1 Vrms by the ranging attenuator. The signal is then routed through the notch filter where the fundamental frequency is removed. The rms/distortion-select switch chooses output of the notch filter and sends it to the rms-to-dc converter's input. Here, the rms-to-dc converter measures the rms voltage (to 10 kHz) of the distortion components. The input of the notch is rectified, filtered, and multiplied by 1.11 (the rms-to-average ratio for a sinusoid). The resulting dc voltage is measured by the internal DVM as described in paragraph 2.9. The processor divides the rms output voltage of the notch filter by the rms input voltage to the notch filter to obtain a distortion ratio, and then converts the distortion ratio to dB for the SINAD display. The display for percent distortion is obtained by multiplying the distortion ratio by 100.

2.11 OSCILLOSCOPE

Three basic functions are provided by the system oscilloscope: 1) alphanumeric, 2) modulation, and 3) external-oscilloscope display.

A block diagram of the oscilloscope is shown at the end of the section in Figure 2-10.

Drive signals for the CRT are provided by circuits on the Scope Amplifier board (A2). Horizontal and vertical signals are amplified by their respective amplifiers from input levels of 0.5 V/Div to the levels required on the deflection plates. A Z-Axis modulator circuit controls the cathode-to-grid bias voltage on the CRT to give intensity control.

2.11.1 HORIZONTAL INPUT

External or internal signals can be selected for the horizontal-amplifier input. External signals come from the front panel's Ext Horiz input port. Internal signals come from the A7 Scope/DVM Control board (INT SCOPE HORIZ) or from the horizontal timebase generator on the Scope Amplifier board (A2). When either the external input or the timebase generator is selected, it is summed with a dc signal (HORIZ POSITION) which comes from the front panel's Horiz position control. The dc signal controls the horizontal position of the scope display.

The front panel's Ext Horiz input is applied to the top of the horizontal vernier-gain potentiometer. The wiper of the gain potentiometer provides the HORIZ INPUT signal to the pre-amplifier on the Front-Panel Interface board (A15). The pre-amplifier provides the required horizontal-input sensitivity and buffers the signal from the select switch on the Scope Amplifier board.

The horizontal timebase generator provides a six-decade sweep range from 1 µsec to 100 msec per division. Control of the timebase generator comes from the front panel's horizontal switch through the processor.

The INT SCOPE HORIZ signal is a sawtooth waveform which is provided by the output of either the horizontal character-sweep generator or the synthesizer-sweep generator. A switch on the Scope/DVM Control board controls which output is selected. During character display, it selects the character sweep, which provides the horizontal sweep for the raster-scan character display. During spectrum-analyzer and RF generator sweep operation, control of the INT SCOPE HORIZ signal alternates between character sweep and synthesizer sweep. This allows the oscilloscope and character information to be simultaneously displayed on the CRT. This also allows the scope sweep to be synchronized with the RF Synthesizer sweep.

2.11.2 VERTICAL INPUT

One of four possible signals can be switched to the vertical amplifier's input by a select switch on the Scope/DVM Control board. The 700-kHz IF and SPEC ANA VERT signals from the Receiver board provide the displays for IF envelope and spectrum analyzer, respectively. The vertical character-sweep generator provides the vertical sweep for the raster-scan character display. The remaining input (VERT FROM RNG SW) is connected either to the front panel's external vertical input or to the modulation-scope input (INT SCOPE TO RNG SW).

A vertical pre-amplifier on the Front-Panel Interface board gives a vertical sensitivity of 10 mV/Div and provides positioning and vernier-gain capability for its input. This amplifier provides the VERT FROM RNG SEL output to the A7 board. It is preceded by a four-decade range attenuator which is controlled from the front panel's vertical switch through the processor. The attenuator provides external vertical-input sensitivities from 0.01 to 1.0 V/Div and modulation-scope sensitivities from 0.25 to 25 kHz/Div.

A select switch ahead of the attenuator chooses between the external vertical input or the modulation-scope inputs. Further switching selects ac or dc coupling for the external input. The modulation-scope signal path is switched to one of three possible sources on the Scope/DVM Control board. Demodulation signals from the Receiver are selected via the DEMOD CAL AUDIO path. FM signals are selected via the MOD CAL AUDIO signal path; AM signals are selected via the CARRIER + MOD LVL signal paths. The Audio Synthesizer board provides the MOD CAL AUDIO signal, while the RF Input module provides the CARRIER + MOD LVL signal.

A Z-Axis select circuit on the Scope/DVM Control board gates either the CHARACTER GEN signal for character displays or the retrace blanking signal from the timebase generator for scope displays to the Z-Axis modulator on the Scope Amplifier board.

Figure 2-1. Block Diagram

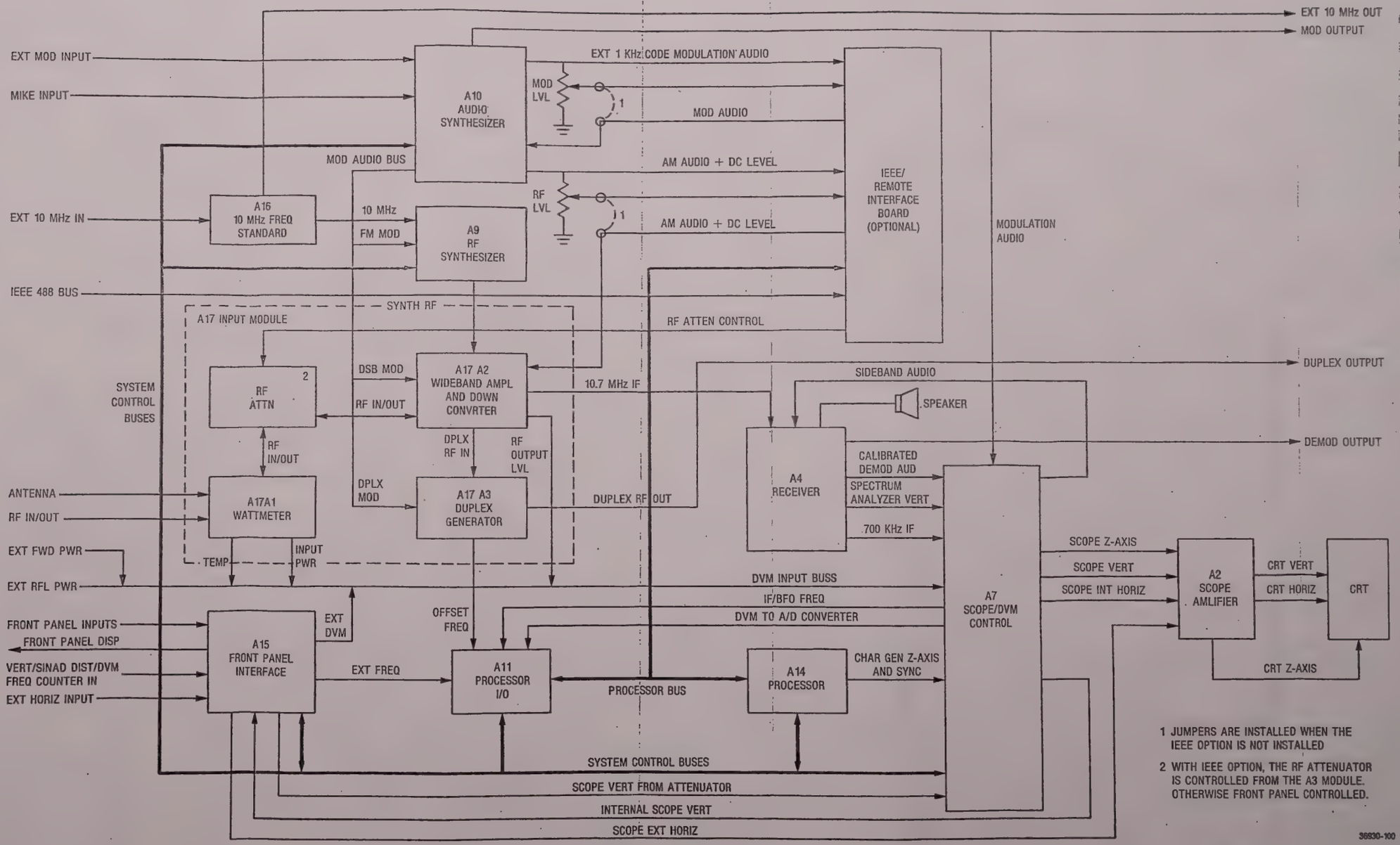

Figure 2-2. Bus Structure

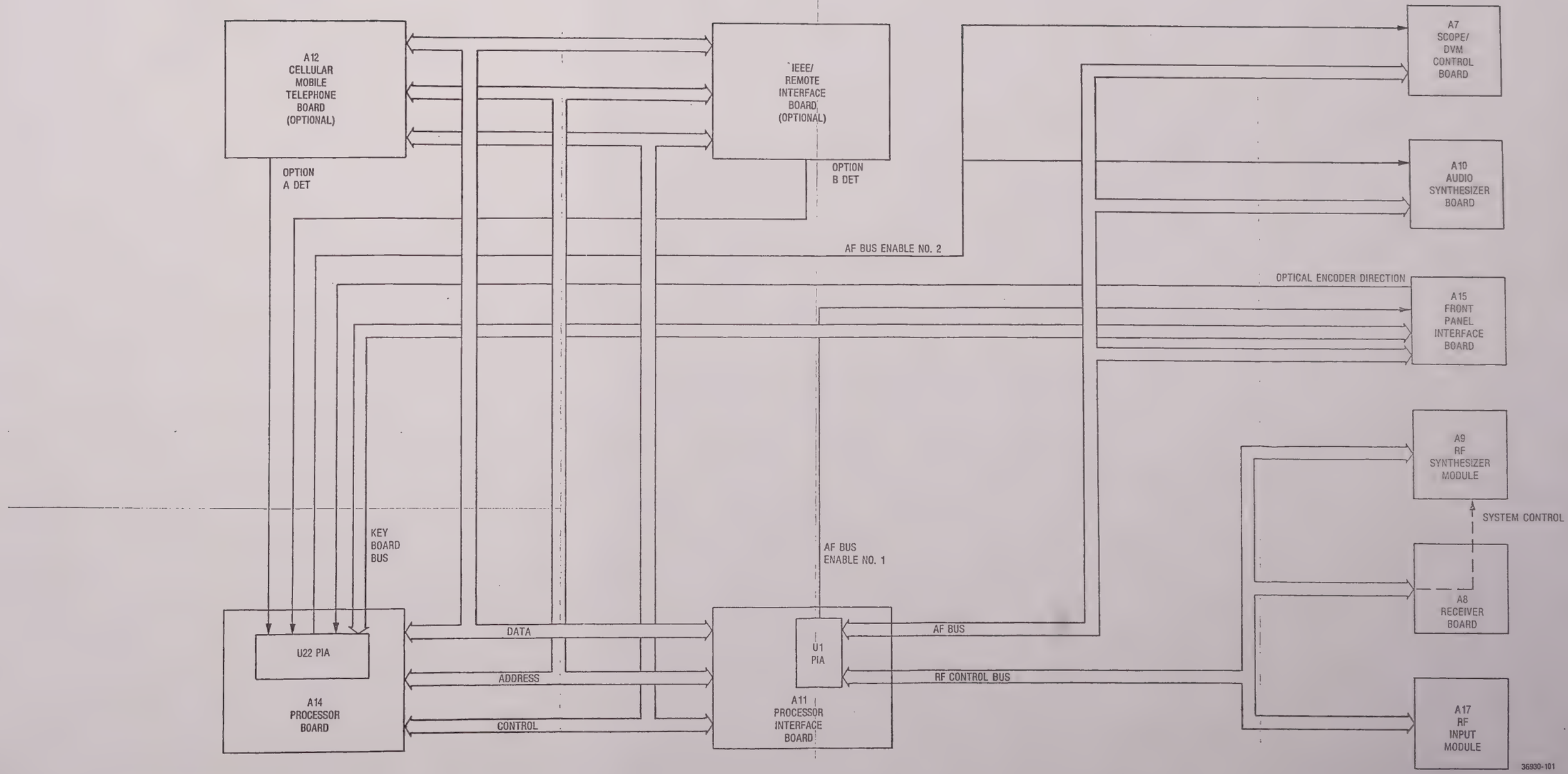

Figure 2-3. Block Diagram

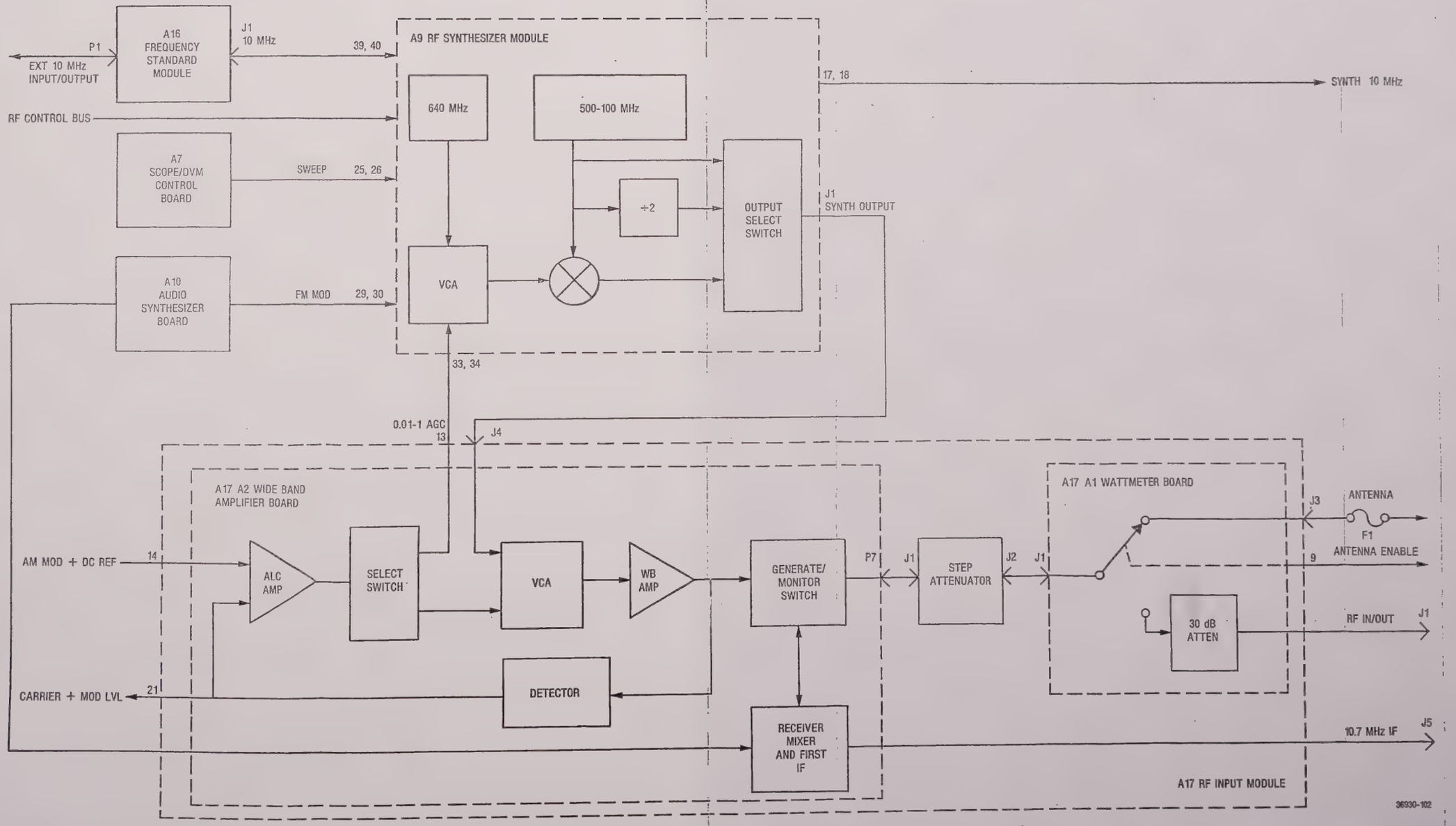

WATTMETER

Figure 2-4. Block Diagram

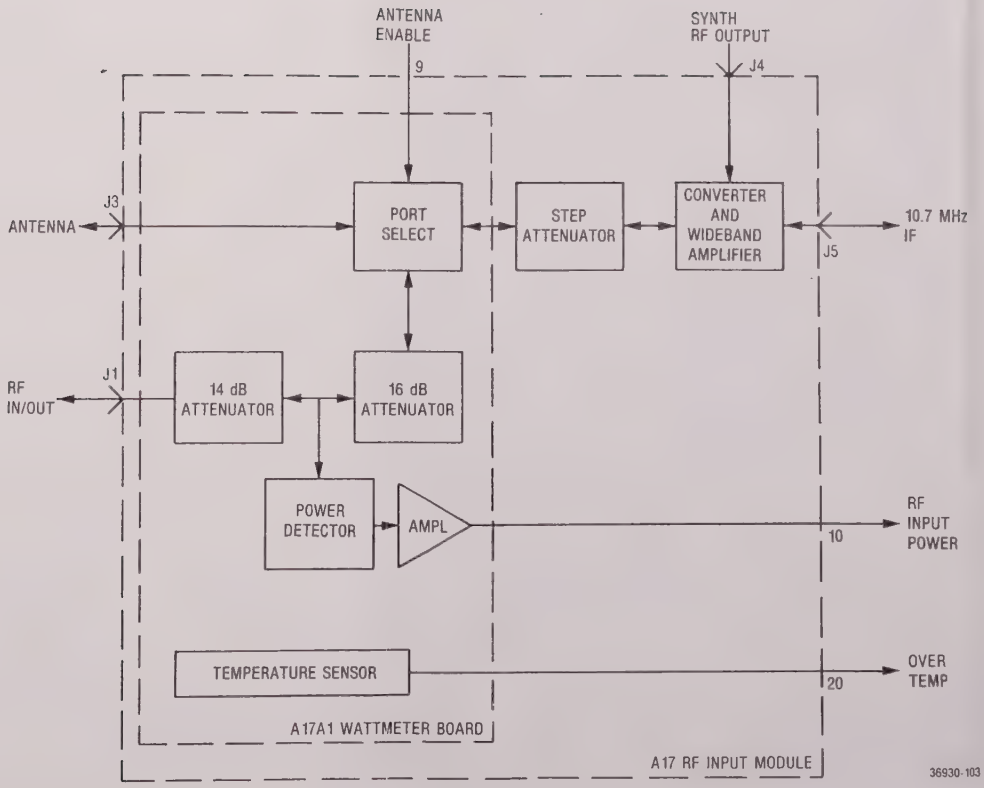

Figure 2-5. Block Diagram

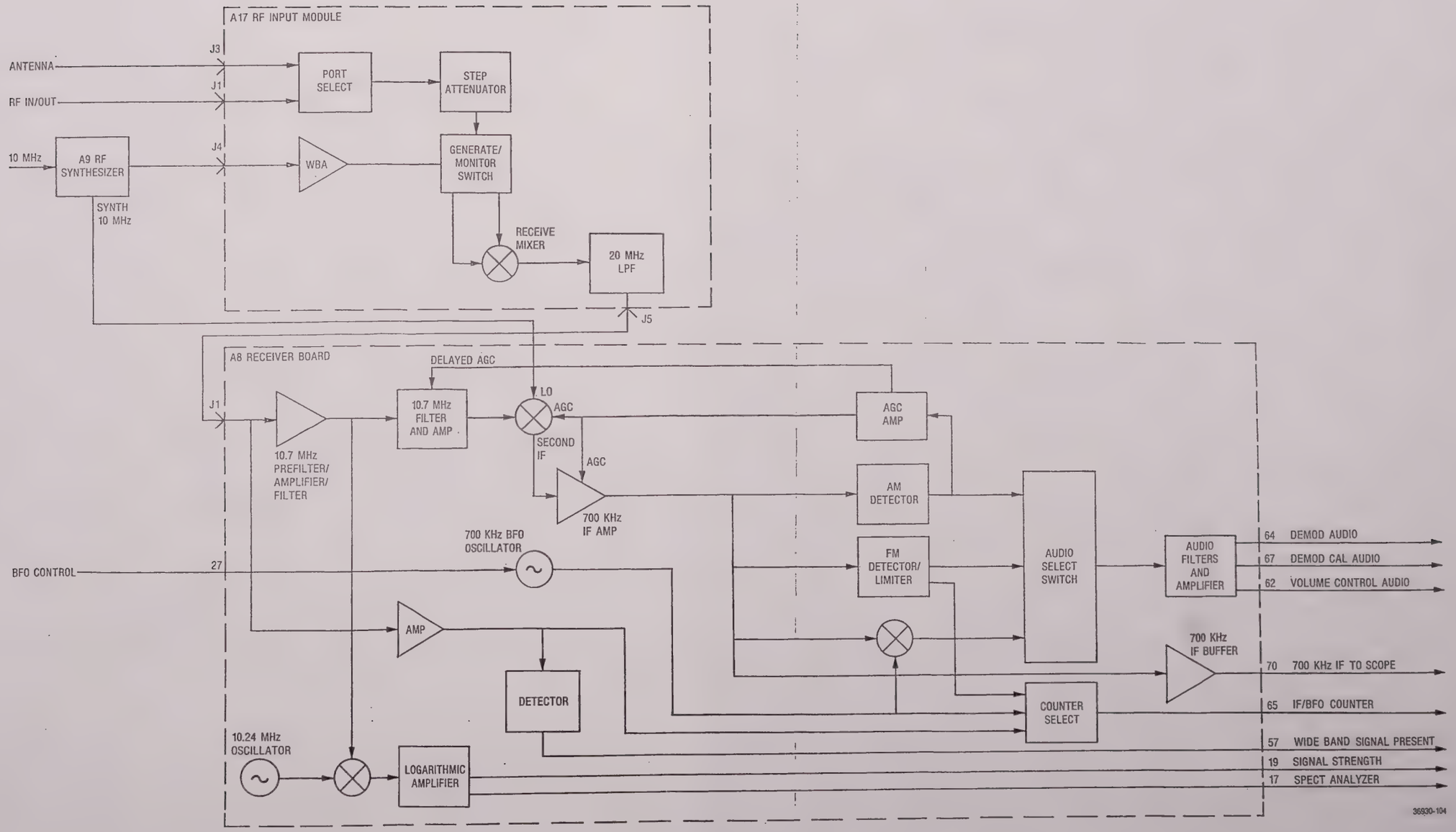

DUPLEX GENERATOR

Figure 2-6. Block Diagram

CODE SYNTHESIZER

Figure 2-7. Block Diagram

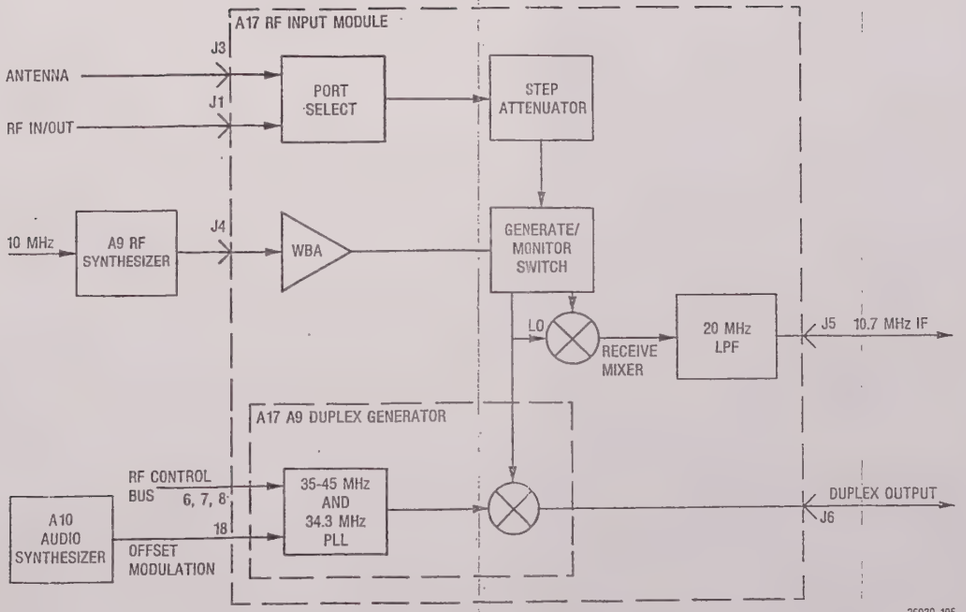

Figure 2-6. Duplex Generator – Block Diagram

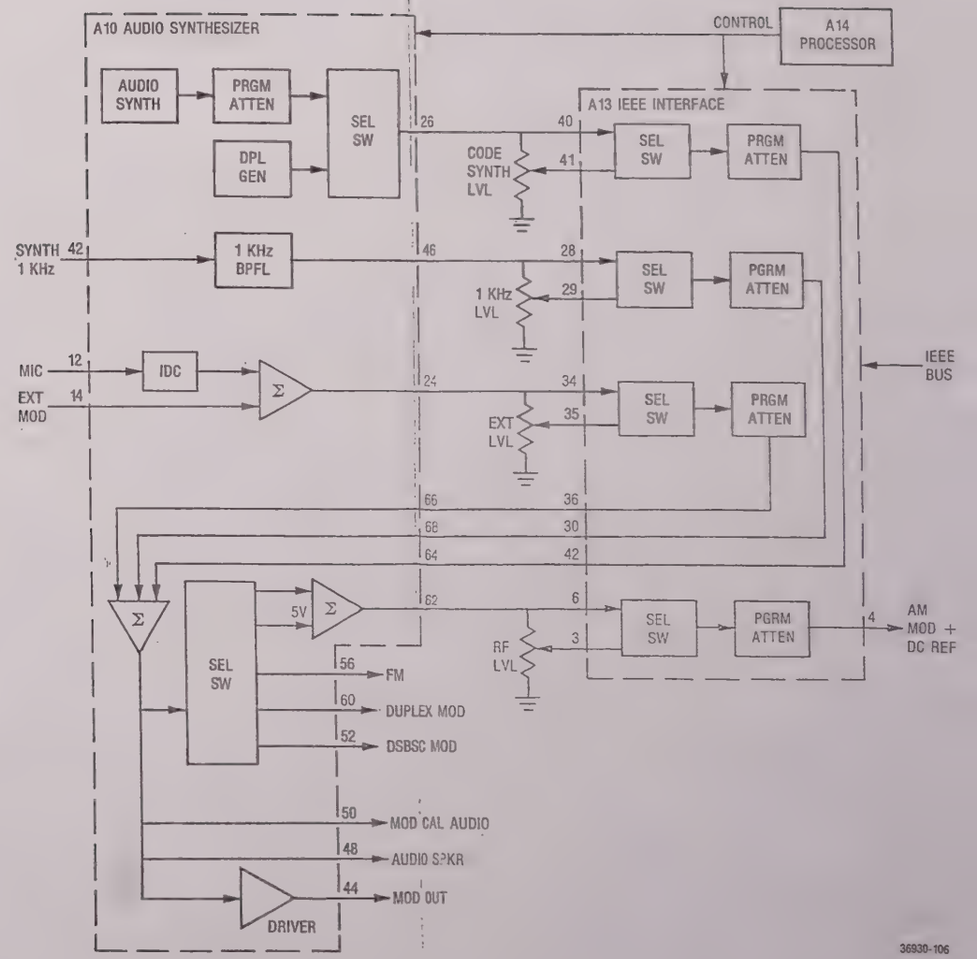

Figure 2-7. Code Synthesizer – Block Diagram

FREQUENCY COUNTER

Figure 2-8. Block Diagram

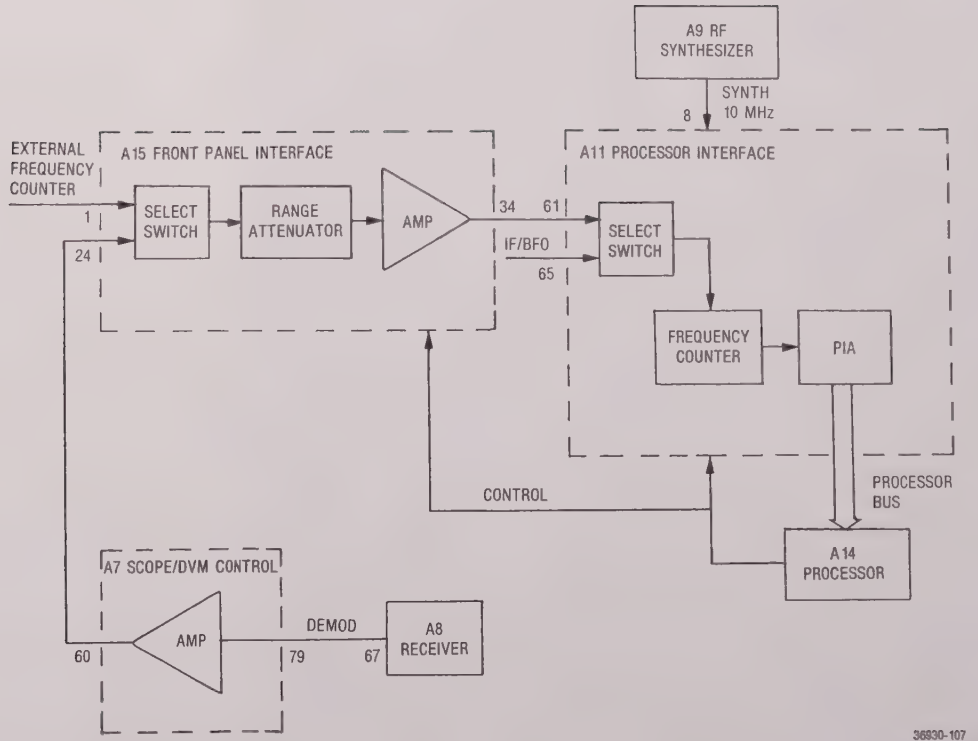

Figure 2-9. Block Diagram

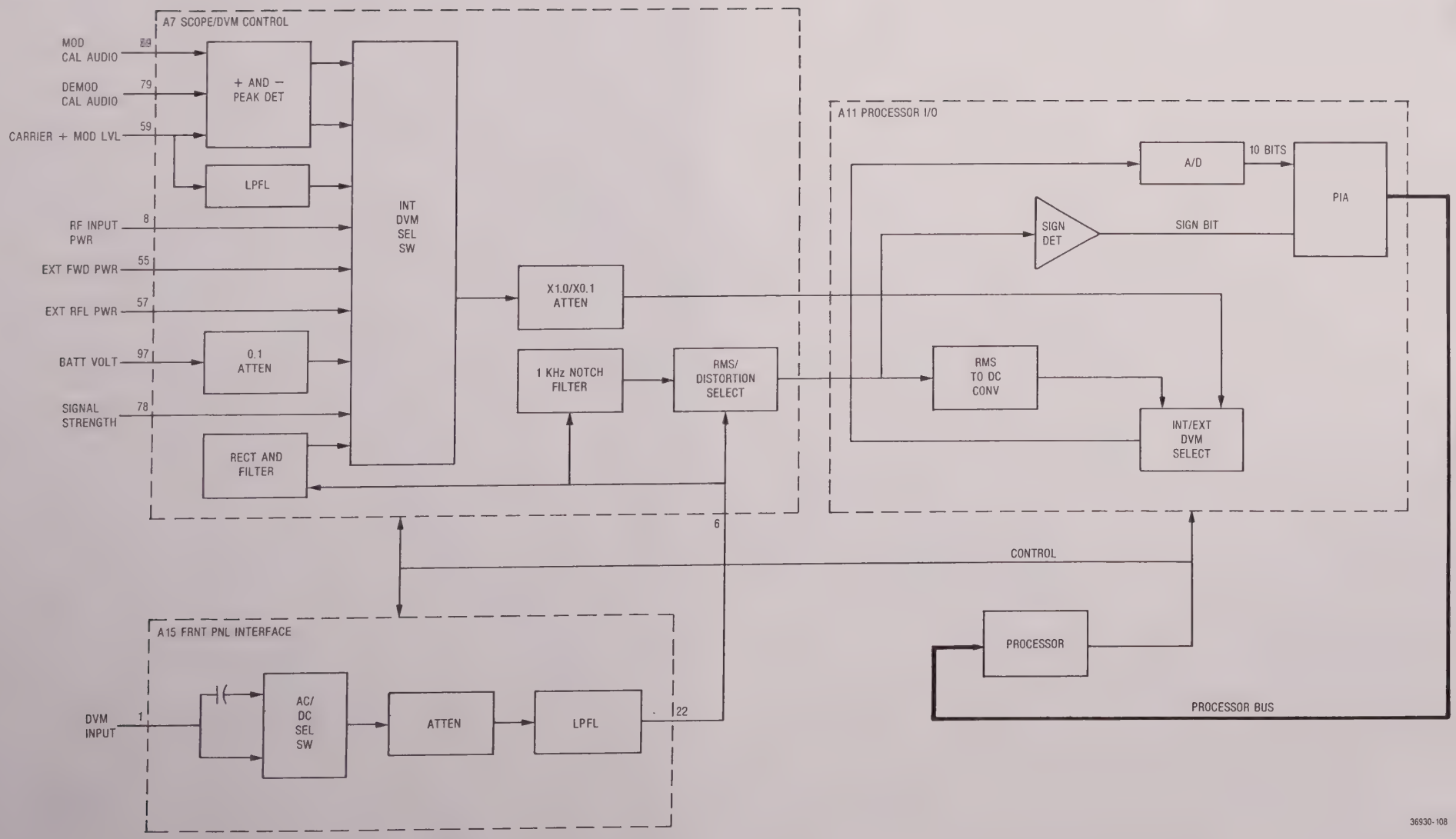

Figure 2-10. Block Diagram

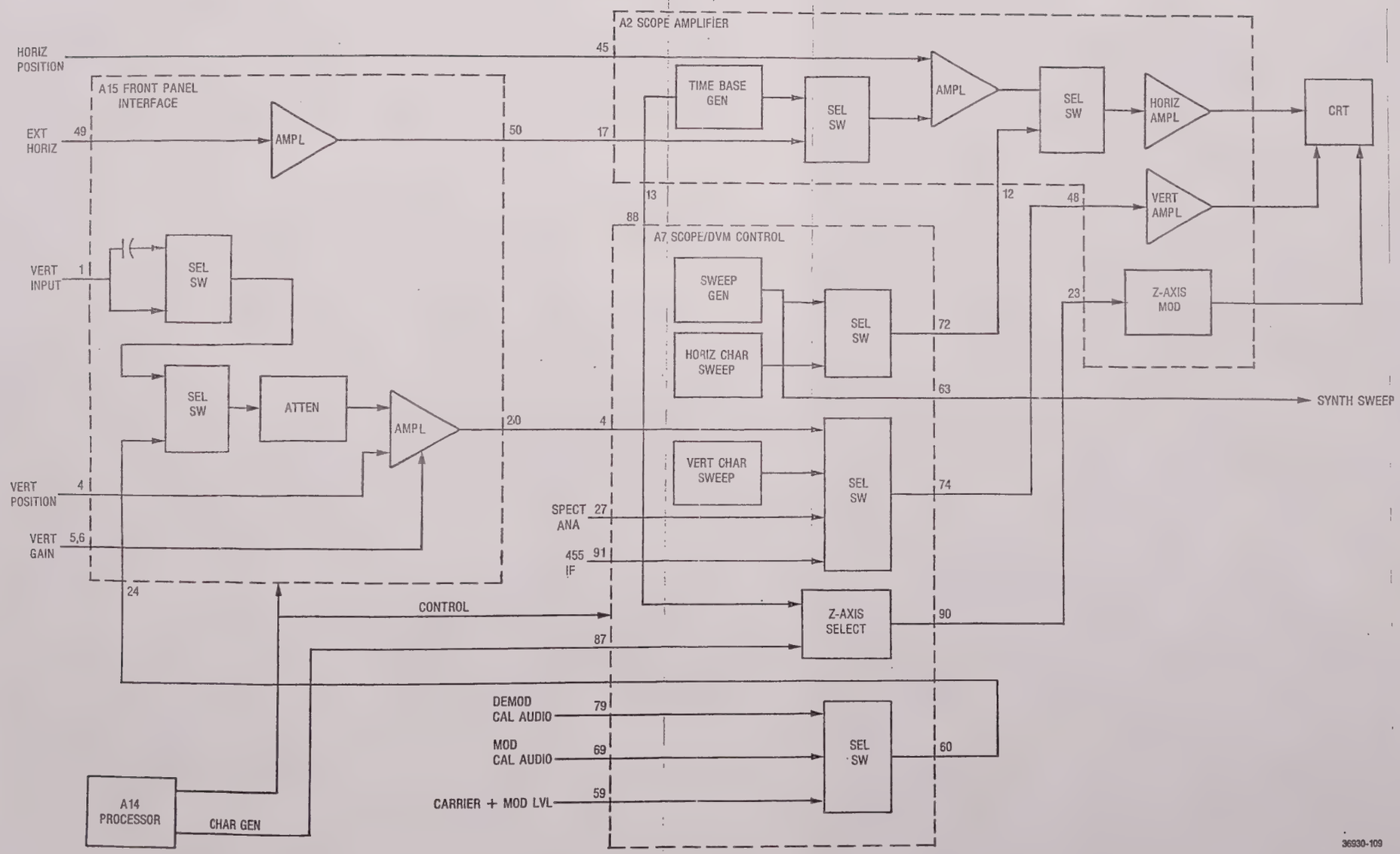

SECTION 3.
ALIGNMENT PROCEDURE

3.1 INTRODUCTION

This section provides a basic (paragraph 3.2) and an extended (paragraph 3.3) alignment procedure. The basic procedure, which should accompany any service work, requires only a calibrated oscilloscope. The extended procedure, which should be performed at nominal six-month intervals, requires the oscilloscope, module extenders, a calibrated digital voltmeter and other equipment as listed in Table 3-2. All adjustments not covered in this procedure should be performed on suitable module test fixtures only.

3.1.1 TEST EQUIPMENT REQUIRED

The basic procedure requires the test equipment listed in Table 3-1. The additional equipment required for the extended procedure is listed in Table 3-2.

Table 3-1. Basic Test Equipment Required

Description	Model
*Oscilloscope Test-Point Shorting Jumper Nonmetallic Alignment Tool	Motorola R1004A

*An R2001 is a suitable substitute.

Table 3-2. Extended Test Equipment Required

Description	Model
*Oscilloscope	Motorola R1004A
*Digital Voltmeter	Motorola R1001A
*RF Signal Generator	Motorola R1201A
*Modulation Meter	Boonton 82AD
Audio Generator	Motorola S1067
Receiver Test Cover	Motorola
Extender Card Set	Motorola

*An R2001 is a suitable substitute for these separate equipments.

3.1.2 PREPARATION FOR ALIGNMENT

1. Perform all alignments at normal ambient temperature.
2. Remove the top cover of the unit to be aligned.
3. Turn on the unit to be aligned, allowing a warmup time of 15 minutes before starting alignment.

3.2 BASIC ALIGNMENT PROCEDURE

3.2.1 LOW VOLTAGE SUPPLY

1. Remove low voltage power supply cover and turn on System Analyzer.
2. Connect a DVM to test point TP5 on the Output board A5.
3. Adjust R6 on the Control board, A4, (Figure 3-1) for a DVM reading a TP5 (A5) of +5.2 Vdc ±0.1 Vdc.

3.2.2 CRT INTENSITY BIAS

1. Select Scope DC display and Ext Horiz input mode on the System Analyzer. Set the Intensity control fully counter clockwise.

CAUTION

Do not let a dot stay in one place on the CRT screen for more than 30 seconds because it will leave a permanent burn in the phosphor.

2. Adjust the Intensity Bias potentiometer on the Scope Amplifier board (Figure 3-2) until a dot appears on the screen. You may have to use the Vertical and Horizontal position control (Vert, Horiz) on the front panel to bring the dot onto the screen. Then back off the Intensity Bias potentiometer until the dot just disappears.

3.2.3 CRT INTENSITY BALANCE

1. Select Scope DC display and a horizontal sweep rate of 1 mSec/Div on the System Analyzer. Set the horizontal timebase vernier to calibrate (Cal) and adjust the Intensity control for a barely visible horizontal line on the CRT.
2. Adjust the Intensity Balance potentiometer (Figure 3-2) for uniform intensity of the horizontal trace from left to right. The Balance potentiometer affects the intensity on the left side of the trace.

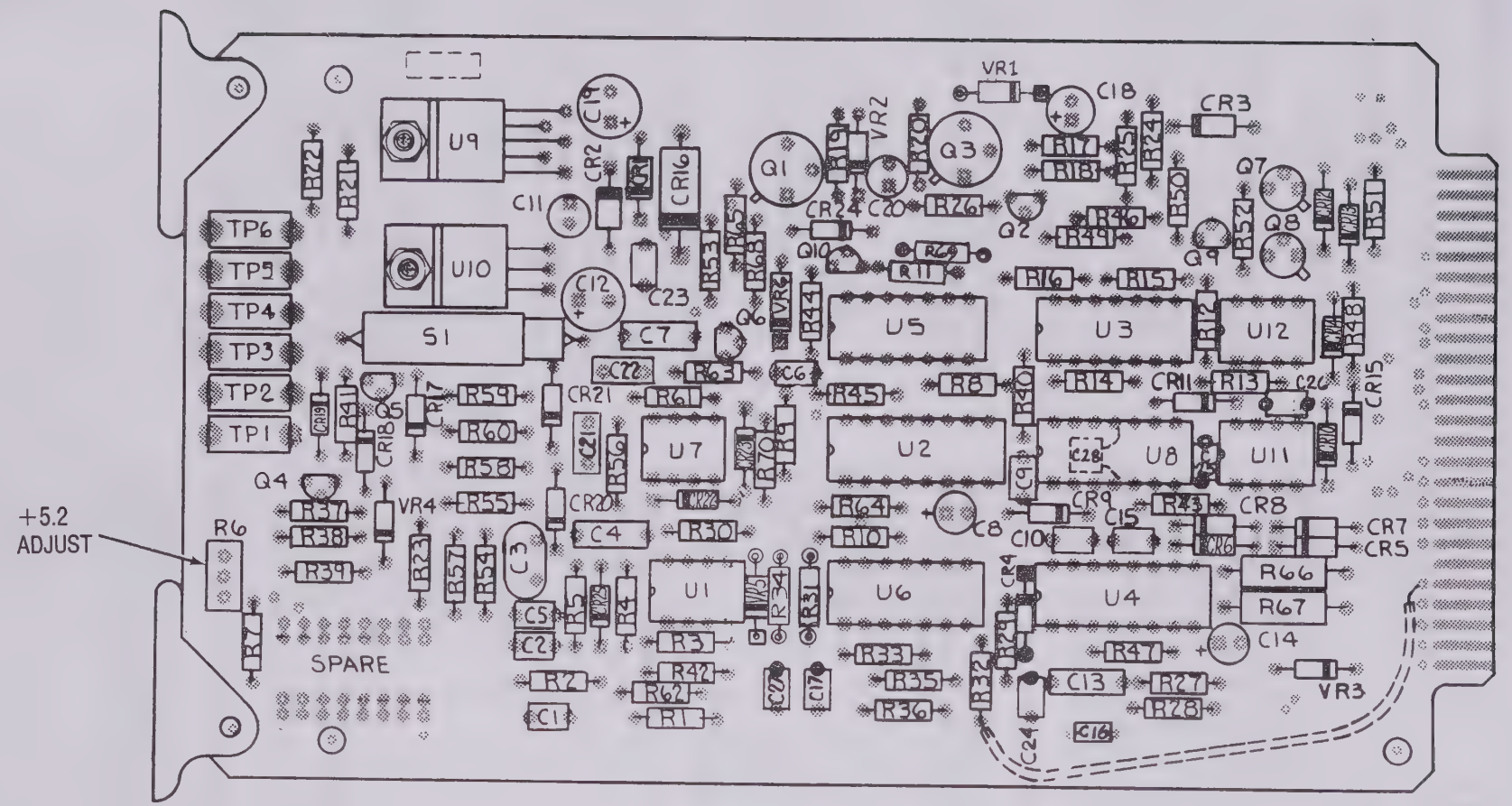

Figure 3-1. Control Board (A4) – Alignment Points

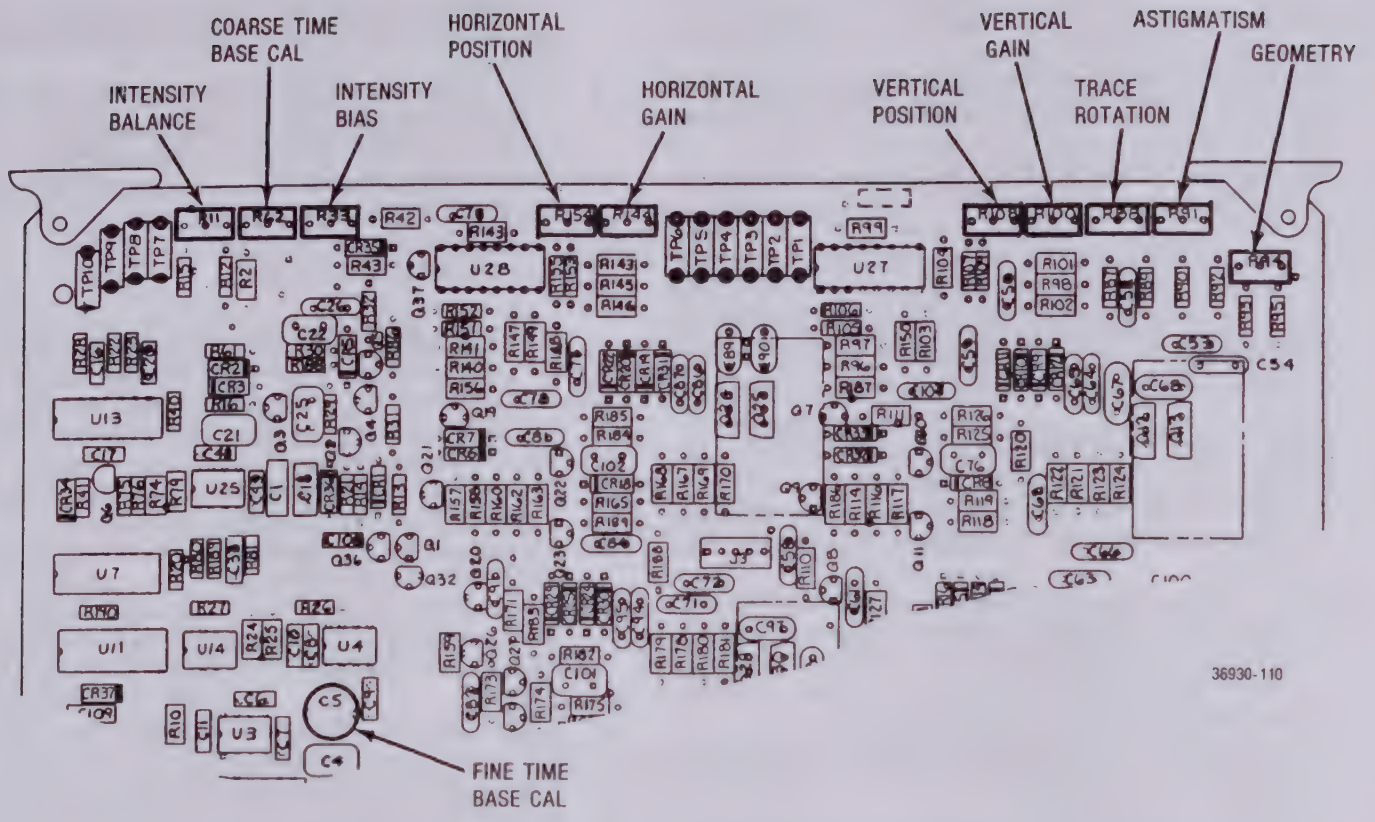

Figure 3-2. Scope Amplifier Board (A2) – Alignment Points

3.2.4 CRT ASTIGMATISM AND GEOMETRY

1. Select Monitor function and Gen/Mon Mtr display on the System Analyzer. Set the Intensity control for a medium-intense display.
2. While using the Focus control to maintain a focused display at the center of the CRT, adjust the Astigmatism and Geometry potentiometers (Figure 3-2) for the best focus at the outer edges of the CRT with minimum pincushion and barrel distortion of the display. The two adjustments are interactive; to get the best display, alternate repeated small adjustments between the two potentiometers.

3.2.5 CRT VERTICAL CENTERING AND TRACE ROTATION

1. Select Gen/Mon Mtr display. Adjust the Intensity control for a comfortable viewing brightness.
2. With the Test-Point Shorting Jumper, connect TP1 of the Scope Amplifier board (Figure 3-2) to chassis ground.
3. Adjust the Trace Rotation potentiometer (Figure 3-2) to make the horizontal trace on the CRT perpendicular to the graticule center line.
4. Adjust the Vertical Position potentiometer (Figure 3-2) so that the horizontal trace on the CRT passes through the graticule center point.
5. Adjust the Trace Rotation potentiometer (Figure 3-2) to align the horizontal trace on the CRT behind the horizontal graticule line.
6. Remove the jumper from TP1.

3.2.6 CRT HORIZONTAL CENTERING

1. Select Gen/Mon Mtr display. Adjust the Intensity control for a comfortable viewing brightness.
2. With the Test-Point Shorting Jumper, connect TP6 of the Scope Amplifier board (Figure 3-2) to chassis ground.
3. Adjust the Horizontal Position potentiometer (Figure 3-2) so that the vertical trace on the CRT passes through the graticule center point.
4. Remove the jumper from TP6.

3.2.7 CRT HORIZONTAL GAIN

1. Connect the Mod Out port to the Ext Horiz port on the System Analyzer's front panel.
2. Select Generate FM function and Scope DC display. Set the Horiz control for external horizontal

input (Ext). Turn the Code Synthesizer and the Ext Level control OFF, and the 1 KHz Level control up about half way.

3. Connect an oscilloscope with a calibrated vertical input to TP6 on the Scope Amplifier board (Figure 3-2).
4. Using the front panel's horizontal vernier control, adjust for a 3 Vp-p amplitude on the sinewave at TP6.
5. With 3 Vp-p at TP6, adjust the Horizontal Gain potentiometer (Figure 3-2) for a CRT horizontal trace of 6 cm. (Use the front panel controls to position the trace at a convenient place near the center of the CRT.)

3.2.8 CRT VERTICAL GAIN

1. Connect the Mod Out port to the vertical input port (Vert In) on the System Analyzer's front panel.
2. Select Generate FM function and Scope DC display. Set the Horiz control for a sweep rate of 1 mSec/Div and the horizontal vernier to Cal. Set the Vert control for an input sensitivity of 1V/Div and the vertical vernier to Cal.
3. Turn the Code Synthesizer and the Ext Level control OFF, and the 1 KHz Level control up about half way.
4. Connect an oscilloscope with a calibrated vertical input to TP1 on the Scope Amplifier board (Figure 3-2).
5. Using the 1 KHz Level control on the front panel, adjust for a 3 Vp-p amplitude on the sinewave at TP1.
6. With 3 Vp-p at TP1, adjust the Vertical Gain potentiometer (Figure 3-2) for a 6-cm p-p sinewave on the CRT. (Use the front panel's Horiz and Vert position controls to center the waveform on the CRT.)

3.2.9 VERTICAL INPUT GAIN

1. Select Generate FM function and Scope DC display. Set the Horiz control for a sweep rate of 1 mSec/Div and the horizontal vernier to Cal. Set the Vert control for an input sensitivity of 1V/Div, and the vertical vernier to Cal.
2. Connect an oscilloscope with a calibrated vertical input to the Mod Out port on the front panel.
3. Turn the Code Synthesizer and the Ext Level control OFF and adjust the 1 KHz Level control for a 6 Vp-p sinewave on the attached oscilloscope.
4. Disconnect the oscilloscope from the Mod Out port and connect the Mod Out port to the Vert input port.
5. Adjust the Input Vertical Gain potentiometer on the Front-Panel Interface board (Figure 3-3) for a 6-cm p-p sinewave on the CRT. (Use the front panel's Horiz and Vert position controls to center the waveform on the CRT.)

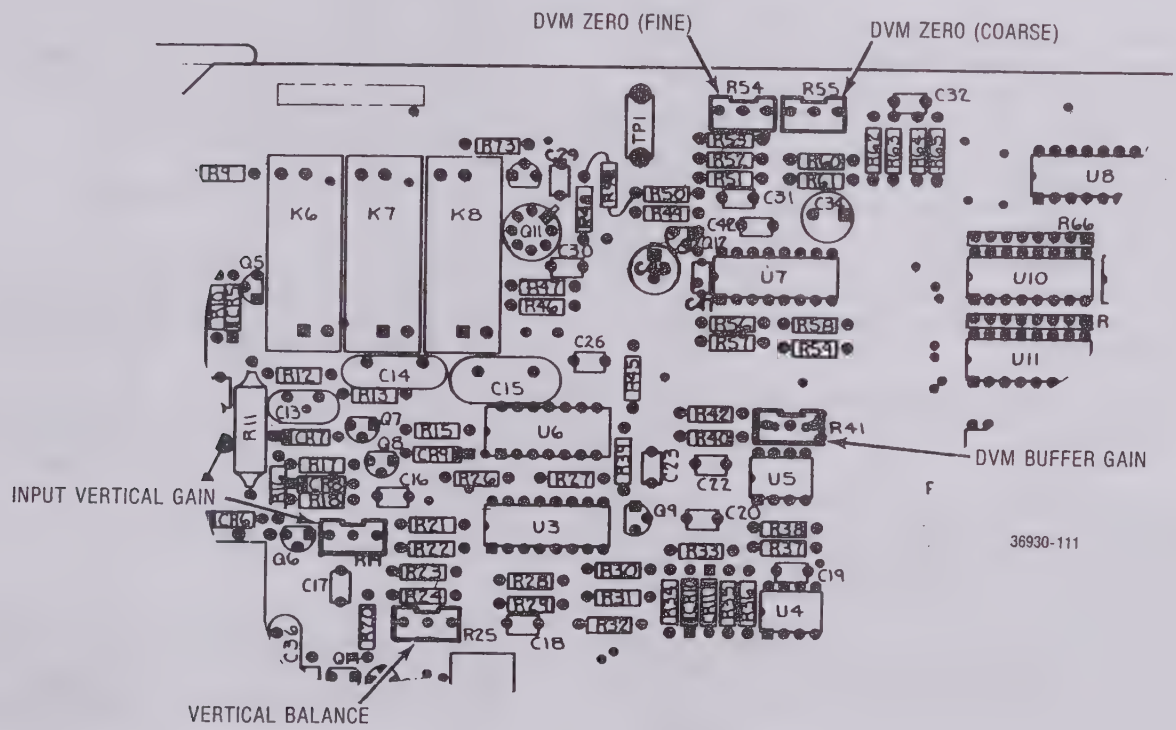

Figure 3-3. Front Panel Interface Board (A15) – Alignment Points

3.2.10 DVM ZERO

1. Select DVM display and DC mode.
2. Short the center conductor of the DVM input port (DVM In) to ground.
3. Adjust the Coarse DVM Zero and the Fine DVM Zero potentiometers on the Front-Panel Interface board (Figure 3-3) for a zero reading on the DVM display.

3.2.11 CHARACTER GENERATOR

1. Select Monitor FM function and Gen/Mon Mtr display.
2. Adjust the Horizontal Character-Sweep-Width potentiometer on the Scope/DVM Control board (Figure 3-4) so that the right-hand edge of the CRT character display is approximately 4.2 graticule divisions to the right of the graticule center line.
3. Adjust the Vertical Character-Sweep-Width potentiometer on the Scope/DVM Control board (Figure 3-4) so that the bottom edge of the CRT display is approximately 3.3 graticule divisions below the graticule center line.

3.2.12 SPECTRUM ANALYZER CENTERING

1. Select Spect Analyzer display. Set the dispersion control (Dispr) on the front panel to 1 MHz (fully counter clockwise). Set the center frequency of the Analyzer to 10.0 MHz.
2. Connect the 10 MHz STD port on the rear panel to the RF In/Out port on the front panel. Set the RF step attenuator (Step) to obtain a convenient spectral display.

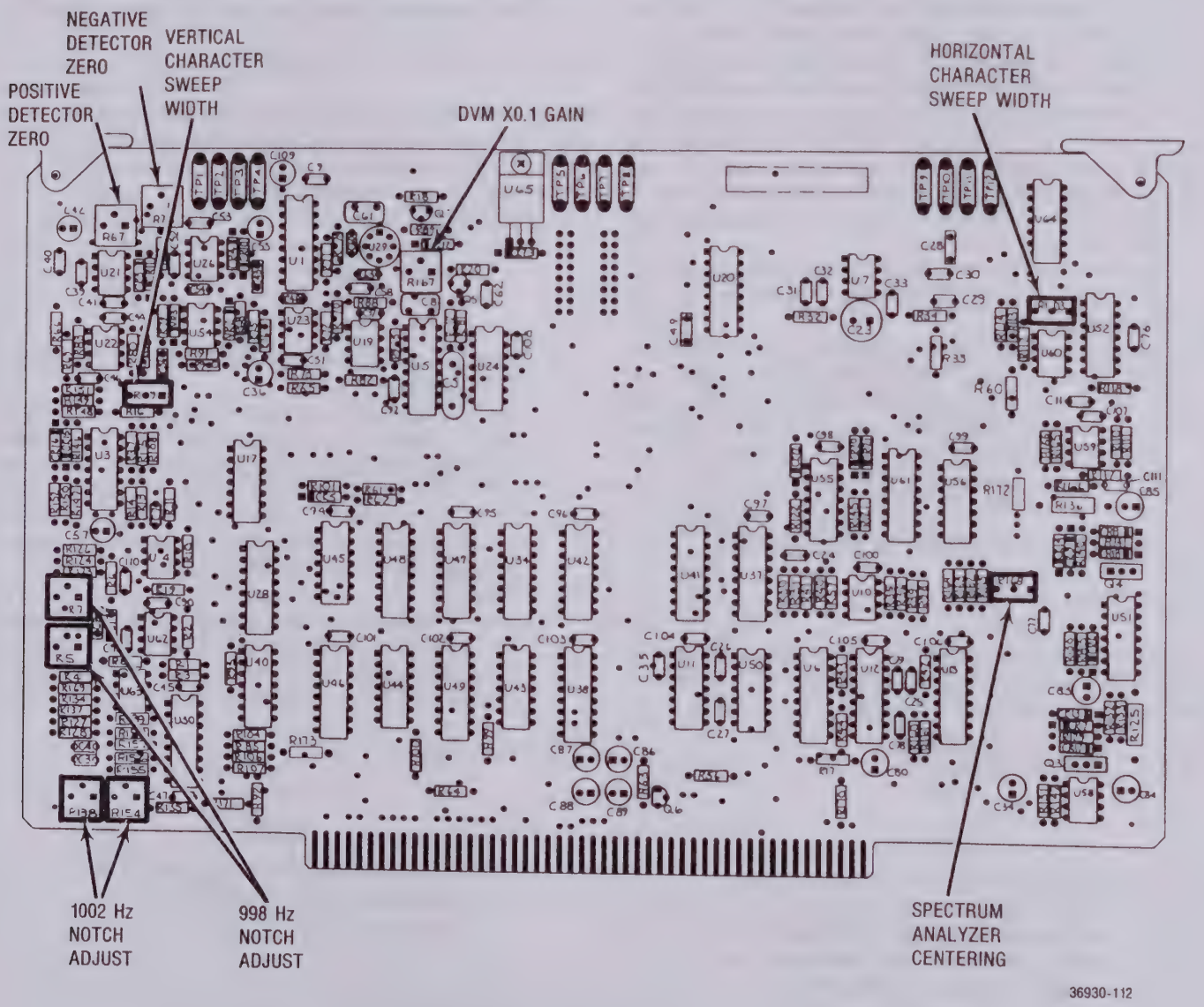

Figure 3-4. Scope/DVM Control Board (A7) – Alignment Points

3. Adjust the Spectrum Analyzer Centering potentiometer on the Scope/DVM Control board (Figure 3-4) so that the spectral line on the CRT is centered about the center graticule line.

3.2.13 HORIZONTAL TIMEBASE

1. Select Generate FM function and Signaling Sequence (Seq) display. Select A/B encode, and program Tone A for 20.0 Hz, and Tone B for 19,999.9 Hz.
2. Select Modulation display. Set the Oscilloscope controls for a vertical range of 2.5 kHz/Div, Auto Trigger, and a horizontal sweep rate of 10 mSec/Div. Set the horizontal and vertical vernier controls to Cal.
3. Set the Code Synthesizer for continuous (Cont) Tone A, and turn up the Code Synthesizer level control (Code Synth Lvl) to obtain a nearly full-scale sinusoidal waveform on the CRT. Turn the Ext Level and the 1 KHz Level controls OFF.
4. Adjust the Coarse Timebase Calibration potentiometer on the Scope Amplifier board (Figure 3-2) so that one cycle of the displayed waveform occurs in 5 cm along the horizontal axis. Use the Vert and Horiz position controls to center and move the waveform; this will measure the 5 cm in the middle of the screen and avoid nonlinearities near the edge of the CRT.
5. Set the Oscilloscope Horiz control for a sweep rate of 10 µSec/Div and select Tone B output on the Code Synthesizer.
6. Adjust the Fine Timebase Calibration capacitor on the Scope Amplifier board (Figure 3-2) so that one cycle of the displayed waveform occurs in 5 cm along the horizontal axis. As with coarse timebase calibration, use the Vert and Horiz position controls to center and move the waveform.

3.3 EXTENDED ALIGNMENT PROCEDURE

3.3.1 DVM

Perform 3.1.2 preparation for alignment and 3.2 basic alignment procedure before proceeding to any of the extended alignment procedure.

3.3.1.1 Peak Detector Zero

NOTE

Do not attempt to make a peak detector alignment with any boards on extender cards. The Receiver Board (A8) may be removed to make access to adjustments.

1. Select generate FM Narrowband function and turn the code synthesizer, External level control, and 1 KHz level control OFF.
2. Connect an external DVM to TP4 on the Scope/DVM Control board (see Figure 3-4).
3. Adjust the positive detector zero (R67) for a DVM reading of 0.000 ± 0.0009 Vdc at TP4.
4. Connect the external DVM to TP6 on the Scope/DVM Control board.
5. Adjust the negative detector zero (R78) for a DVM reading of 0.000 ± 0.0009 Vdc at TP6.

3.3.1.2 DVM X0.1 Gain

1. Select generate FM Narrowband function and Gen/Mon Mtr display.
2. Connect an external DVM to test point TP6 on the Scope/DVM Control board (see(Figure 3-4).
3. Turn on the 1 kHz internal modulation and adjust the level until the voltage at TP6 reads 2.000 Vdc.

NOTE

Because the internal DVM is continuously multiplexed through nine internal voltage points, the microprocessor must be halted to make the DVM X0.1 Gain adjustment. The microprocessor must be halted on the negative detector cycle. A number of halt attempts may have to be made.

4. Connect a DVM to test point TP5 on the Scope/DVM control board.
5. To halt the microprocessor short test point TP6 on the Processor board to ground. Once the microprocessor has been halted measure the voltage at TP5. The voltage should be 0.2V, approximately X0.1 the voltage at TP6. If the voltage at TP5 is not approximately X0.1 the voltage of TP6 restart and halt the microprocessor until it is.
6. Now that the microprocessor is halted in the negative detector position, adjust R167 (See Figure 3-4) so that the voltage reading at TP5 is equal to X0.1 the voltage at TP6 to four significant figures. (Example TP6 = 2.000 Vdc, TP5 = 0.2000 Vdc.)

3.3.1.3 DVM

NOTE

Do not attempt to make the DVM alignment with any boards on extender cards.

1. Select DVM/DIST display and DC Volts mode. Short the center conductor of the front panel's DVM input port (DVM In) to ground. Connect an external DVM between TP2 and TP90 on the Scope/DVM Control board (Figure 3-4).
2. Adjust the Coarse DVM Zero and the Fine DVM Zero potentiometers on the Front-Panel Interface board (Figure 3-3) until the external DVM reads 0 ± 0.5 mVdc.
3. Remove the short-circuit on the DVM input port and apply approximately 0.900 Vdc from an external power supply. The voltage between TP2 and TP9 of the Scope/DVM Control board should be within ±1 mV of the voltage at the front panel's DVM input port. If the unit fails this test, adjust the DVM Buffer Gain on the Front Panel Interface board (Figure 3-3) until the two voltages are equal.
4. Select Generate FM Narrowband mode and Gen/Mon Mtr display, and turn the MODULATION switch to OFF.
5. Short TP4 to TP9 on the Scope/DVM Control board (Figure 3-4).
6. Adjust the A/D Offset on the Processor Interface board (Figure 3-5) until the plus-peak-deviation reading on the CRT is just toggling between 0.00 and 0.01 kHz. The slightly turn the adjustment to maintain a constant 0.00 reading. Note that if the offset adjustment is turned past this point, the deviation reading is still 0.00, but the A/D converter is not aligned properly.
7. Remove the short-circuit between TP4 and TP9, and connect the positive lead of the external DVM to TP4 of the Scope/DVM Control board (Figure 3-4). Place the negative lead on the ground plane or TP9 of the Scope/DVM Control board.
8. Turn on the 1-kHz internal modulation and adjust the level until the voltage at TP4 reads 0.900 Vdc.
9. Adjust the A/D Gain (Figure 3-5) until the reading on the positive deviation peak is 4.50 kHz.
10. Select DVM DC mode.
11. With the center conductor of the front panel's DVM input port again shorted to ground, adjust the RMS-Converter Offset on the Processor Interface board (Figure 3-5) for a reading of 0.000V on the CRT DVM display.
12. Adjust the Sign Detector Offset (Figure 3-5) until the sign of the 0.000V reading is just flashing between plus and minus.
13. Remove the short and apply approximately 0.900 Vdc to the front panel's DVM input port.
14. While monitoring the input voltage on an external DVM, adjust the RMS-Converter Gain on the Processor Interface Board (Figure 3-5) until the CRT DVM reading equals the external voltage applied.

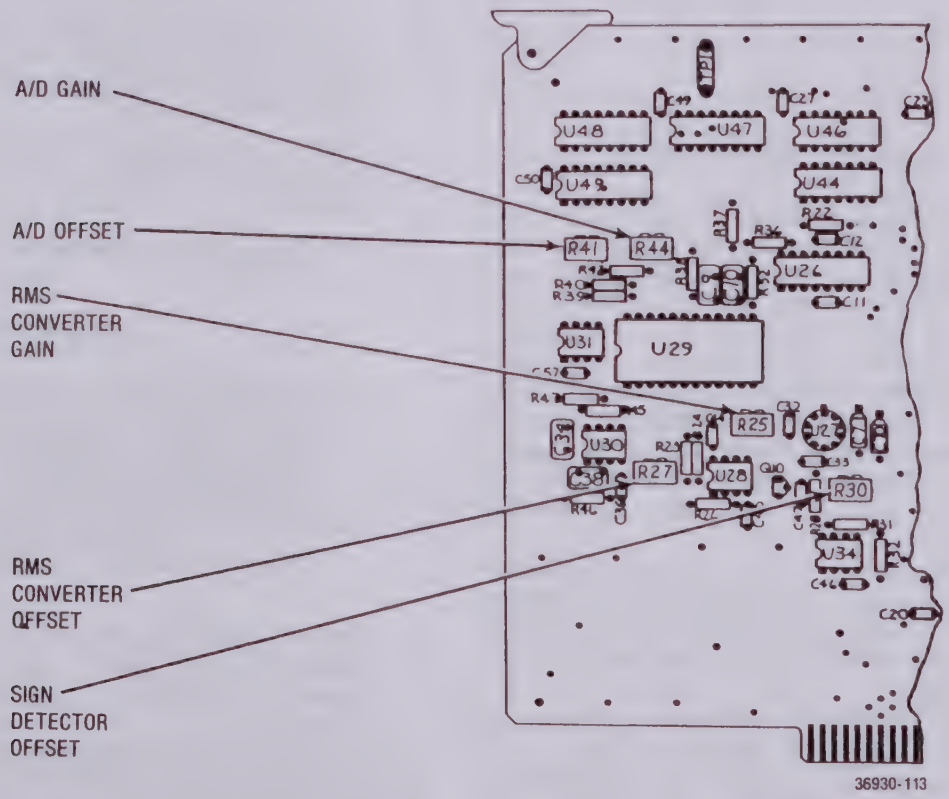

Figure 3-5. Processor Interface Board (A11) – Alignment Points

3.3.2 DISTORTION/SINAD ALIGNMENT

1. Select Generate function and Gen/Mon Mtr display. Using an audio generator with less than 0.1% distortion, apply a 900 mVrms, 1-kHz ± 2 Hz signal to the Vert/SINAD/DVM/Dist/Counter input port on the front panel.
2. Verify that the distortion reading on the CRT is ≤0.5%. If this test fails, align the notch filter.
3. Turn the System Analyzer OFF and extend the Scope/DVM Control board using the 100-pin extender card.
4. Turn the System Analyzer ON and select Generate FM function and Gen/Mon Mtr display.
5. Using the same low-distortion generator as in step 1, apply a 998 ± 0.2-Hz sinewave to the distortion input port (Dist In).
6. Alternately adjust the 998-Hz notch potentiometers on the Scope/DVM Control board (Figure 3-4) to null the distortion reading on the CRT. You should get a reading of less than 0.5%.
7. Change the audio generator's input frequency to 1002 ± 0.2 Hz.
8. Alternately adjust the 1002-Hz notch potentiometers on the Scope/DVM Control board (Figure 3-4) to again null the CRT distortion reading. You should again get a reading of less than 0.5%.
9. Turn the system's power OFF and put the Scope/DVM Control board back into the system chassis.

3.3.3 RECEIVER

3.3.3.1 Linear IF

1. Perform the basic alignment procedure of paragraph 3.2.
2. Turn the System Analyzer OFF and remove the Receiver board. Remove the Receiver board cover, install the Receiver Test Cover on the board, and insert the Receiver board into the appropriate extender card. Place the Receiver and extender assembly in the Receiver board's edge connector.
3. Turn the Analyzer ON and select Monitor AM function and Distortion display. Set the monitor frequency to 250 MHz, the RF step attenuator (Step) to 0 dB, the IF bandwidth switch (BW) to Wide, and the Receiver audio filter to 300-Hz HPFL and 3-kHz LPFL.
4. Connect the external signal generator to the Antenna port on the front panel. Adjust the external generator for an output level of approximately −80 dBm and a calibrated, 30 percent AM, 1-kHz tone at 250 MHz.
5. Connect the Demod Out port to the distortion input port (Dist In) on the front panel.
6. Adjust C307 and C320 (marked on the Receiver Test Cover) for lowest distortion; adjust the signal strength of the generator as needed.
7. Select Narrowband FM mode.
8. Adjust the external generator for an output level of approximately −40 dBm and a calibrated, 3-kHz FM, 1-kHz tone.
9. Adjust C327, C328 and C320 (marked on the Receiver Test Cover) for lowest distortion.

3.3.3.2 AM/AGC Calibration

1. Select Monitor AM function and Gen/Mon Mtr display. Set the monitor frequency to 250 MHz, the RF step attenuator to 0 dB, and the BW switch to Narrow.
2. Connect the external generator to the Antenna port on the front panel. Adjust the external generator for an output level of −50 dBm and a calibrated 40 percent AM at 250 MHz.
3. Adjust R359 (marked on the Receiver Test Cover) for a reading of 40% ± 5% on the CRT AM display.
4. Adjust R398 for the increase RF attenuator setting warning to just flash on the CRT.
5. Repeat steps 3 and 4 once.

3.3.3.3 FM Calibration

1. Select Monitor FM function and Gen/Mon Mtr display. Set the monitor frequency to 250 MHz, the RF step attenuator to 0 dB, and the BW switch to Wide.
2. Connect the external signal generator to the Antenna port on the front panel. Adjust the external generator for a center frequency of 250 MHz at an output level of approximately −30 dBm and a calibrated 40-kHz FM.
3. Adjust R421 (marked on the Receiver Test Cover) for a reading of 40 kHz ± 2 kHz on the CRT FM display.

3.3.3.4 Spectrum Analyzer

NOTE

Unless the factory alignment has been disturbed through repair, do not re-align the Spectrum Analyzer except for offset adjustment (R241B). Because all the adjustments interact, re-aligning the Spectrum Analyzer is difficult.

1. Remove cover from receiver board.
2. Connect a high input impedance frequency counter to pin 8 of U201 on the receiver board (see Figure 3-6).
3. Adjust C236 on the receiver board (see Figure 3-6) for a frequency reading of 10.24 MHz ± 100 Hz.
4. Replace receiver test cover.
5. Select Monitor function and the Spect Analyzer display on the System Analyzer. Set the monitor

frequency to 250 MHz, and the RF step attenuator to 40 dB.

6. Connect the external signal generator to the Antenna port on the front panel. Adjust the external generator for a center frequency of 250 MHz and a calibrated output level of −30 dBm with no modulation.
7. Adjust, in succession, C207, C208, C213 and C218 (marked on the Receiver Test Cover) to maximize the amplitude of the spectral line in the center of the CRT display.
8. Adjust R219, R226 and R229 (marked on the Receiver Test Cover) to obtain a uniform change in the spectral amplitude per 10-dB change of the RF step attenuator. R229 affects the level of the spectral component in the top quarter of the screen, R219 affects levels in the third quarter from the top, and R226 affects levels in the bottom quarter.
9. Adjust R241B for offset and R241A for gain, so that with the step attenuator at 0 dB, the peak of the spectral line lies on the 30-dB line of the CRT, and successive step increases of the input attenuator move the spectral amplitude downward on the CRT in 10-dB increments. The accuracy required for any one step-attenuator position is ±2 dB.
10. To obtain the best possible accuracy, you will generally need to repeat steps 4 and 5 multiple times.
11. For the Cellular Option, connect a calibrated signal of −40 dB at 850 MHz into the Antenna port on the front panel. Adjust R241B for a reading of −40 dBm ± 1 dB on the CRT signal-strength display.
12. Turn the power OFF and remove the Receiver board and extender card from the chassis. Remove the Test Cover from the Receiver board and replace the board cover. Put the board back into the system chassis.

3.3.3.5 BFO Centering

1. Select Monitor SSB/BSBSC function, Gen/Mon Mtr display, and turn squelch control off.
2. Adjust C394 (see Figure 3-6) on the Receiver board so that the BFO error frequency control is centered such that both positive and negative BFO error frequencies are equal.

3.3.4 RF SYNTHESIZER

3.3.4.1 24 MHz VCO

1. Remove the 60.5 MHz Loop Board cover (A9A4).
2. Connect a DVM to the junction of CR11 and R37 on the 60.5 MHz Loop Board (see Figure 3-7).
3. Adjust C46 for a DVM reading of +7.0 ±1 Vdc.

3.3.4.2 Phase Shift

NOTE

Unless the factory alignment has been disturbed through repair no adjustment should be made.

1. Remove the GHz Loop cover (A9A5).
2. Connect an audio generator through an external resistor (R ⩾ 50K ohm) to the junction of R12 and C10 on the GHz Loop board (see Figure 3-8).
3. Connect an oscilloscope to the lock detector output, junction of R51 and C35 (see Figure 3-8).
4. Place the RF synthesizer on the appropriate extender card and turn the System Analyzer ON.
5. Select Generate FM function and Gen/Mon Mtr display. Set the Generate FM frequency to 500.0000 MHz.
6. Adjust the audio generator for a 50 Hz sinewave with zero volts dc offset and adjust the variable output control for zero volts ac.
7. With the GHz loop locked increase the output level of generator until a 0.1 Vp-p ac waveform is observed on the oscilloscope.

NOTE

If the current summed into the loop filter is too large (i.e. the output level of the audio signal generator is too large) the GHz loop will break lock. If this happens adjust the level of the audio generator back to zero volts ac, until the GHz loop locks. Then gradually increase the level until a 0.1 Vp-p waveform is observed at the lock detector output.

8. If the lock detector is properly phased, the waveform at the lock detector output will be doubled in frequency (100 Hz) and every peak will be equal in amplitude as shown below:

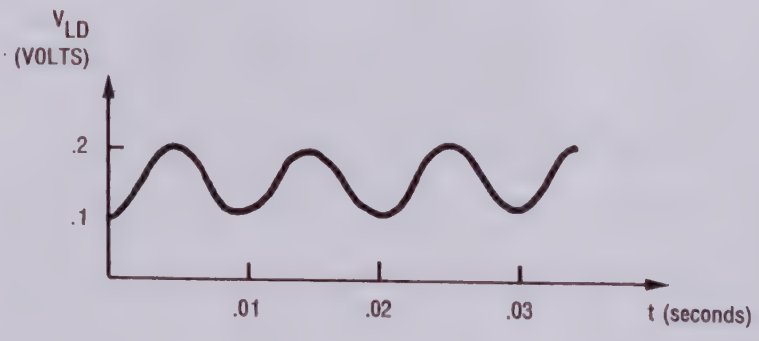

9. If the lock detector is not properly phased, every peak will not be of equal amplitude (see example below). Adjust C24 until the correct waveform above is obtained. If the correct waveform cannot be obtained, select in test a value for C12 that in conjunction with the adjustment of C24 will produce the correct waveform.

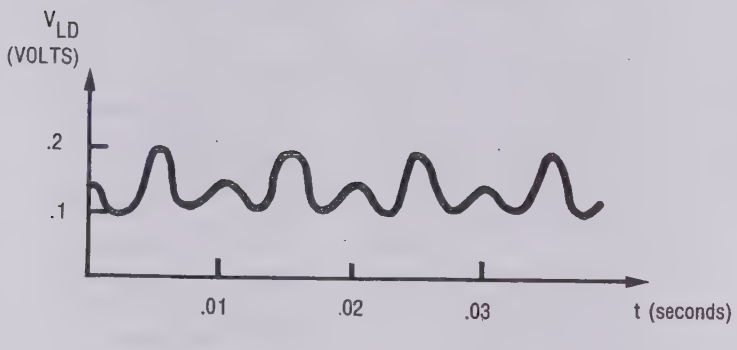

3.3.4.3 FM Deviation

1. Select Generate FM function and Gen/Mon Mtr display. Set the generate frequency to 100 MHz.
2. Connect the calibrated external modulation meter to the Antenna port on the front panel. Tune the external modulation meter to 100-MHz FM.
3. Turn on the Modulation 1 KHz Level switch and adjust for a reading of 20 kHz on the CRT generate-deviation display.
4. Adjust R12 through the hole in the RF Synthesizer cover. (First locate R12 by removing the RF Synthesizer cover.) The reading should be 20 kHz ±1 kHz, as measured by the external modulation meter.

3.3.5 FREQUENCY STANDARD

3.3.5.1 Oven Ready Light

1. Remove System Analyzer bottom cover.

NOTE

If the System Analyzer has a temperature compensated crystal oscillator (TCXO) perform alignment 3.3.5.1.1 TCXO. If the system analyzer has an oven controlled crystal oscillator (OCXO) perform alignment 3.3.5.1.2 OCXO.

3.3.5.1.1 TCXO.

1. Turn System Analyzer ON.
2. Turn R8 (see Figure 3-9) on the frequency Standard Interface board fully clockwise which will turn the oven ready light on the front panel ON.

3.3.5.1.2 OCXO.

1. Turn System Analyzer on and wait approximately 10-20 minutes until heater input current and frequency stabilize. To monitor the heater input current put a DVM across R11 and R12 (see Figure 3-9) which are in parallel. The warm-up current will be 700 to 900 mA (voltage across R11 and R12 will be 0.35 to 0.45 Vdc). The stabilized current will be 200 to 250 mA (0.1 to 0.13 Vdc).
2. Once the heater input has stabilized, adjust R8 on the frequency Standard Interface board until the oven ready light on the front panel just turns on.
3. Connect an external resistor load from the collector to Q1 to ground to increase the heater input current to 350 mA (0.18 Vdc across R11 and R12). The typical resistor value is 100 ohms, 2 watts. The resistor value required to bring the heater input current to 350 mA may change from unit to unit.
4. With the external load resistor connect, adjust R8 on frequency Standard Interface board until the oven ready light just fully turns ON.
5. Remove load resistor and make sure oven ready light is turned ON.

3.3.5.2 Oscillator Level

1. Connect a high input impedance scope probe to the junction of C15 and C17 on the frequency Standard Interface Board (see Figure 3-9).
2. Adjust R18 on the frequency Standard Interface Board for a peak-to-peak voltage between 1 and 2 volts at junction of C15 and C17.

3.3.5.3 Oscillator Frequency

1. Connect an external frequency counter, with at least a 1 part in 10^9 stability reference oscillator, to the 10 MHz STD output on the system analyzer's back panel.
2. Remove the timebase – calibration cover screw on the lower left side of the System Analyzer.
3. Turn on System Analyzer and allow to warm up. Ten minutes for a TCXO or 20 minutes for a OCXO until oven ready light comes on.
4. Using an appropriate non-metallic tuning tool, adjust the timebase oscillator for a counter reading of 10 MHz ± 1 Hz.

NOTE

If a National Bureau of Standards radio station is receivable the following procedure can be performed.

1. Remove the timebase-calibration cover screw on the lower left side of the System Analyzer.
2. Allow the Analyzer to warm up for at least 20 minutes.
3. Select Monitor AM function and Gen/Mon Mtr display. Set the monitor frequency to one of the National Bureau of Standards radio stations (5, 10, 15, or 20 MHz), and use a suitable antenna for these frequencies.
4. Adjust the timebase for a reading of 0 Hz ± 1 Hz on the CRT monitor frequency-error display.

3.3.6 DUPLEX GENERATOR

1. Remove the bottom cover of the System Analyzer and the Duplex Generator cover.
2. Select Generate FM function and Duplex Gen display. Set the DUPLEX GEN switch to ON, the Duplex monitor frequency to 145 MHz, the offset frequency to 45 MHz, and the Image/Dplx switch to Low.
3. Adjust C68 on the Duplex Generator board (Figure 3-10) for 8 to 10V, as measured at TP 1.
4. Connect the calibrated external modulation meter to the DUPLEX GEN Output port on the front panel. Tune the external modulation meter to 100-MHz FM.
5. Turn on the Modulation 1 KHz Level switch and adjust for a reading of 20 kHz on the CRT generate-deviation display.
6. Adjust R69 on the Duplex Generator board (Figure 3-10)for a reading of 20 kHz ± 1 kHz, as measured by the external modulation meter.
7. Set the Duplex offset frequency to 0 Hz Select Monitor FM function and Gen/Mon Mtr display.
8. Connect the DUPLEX GEN Output port to the Antenna port on the front panel.
9. Adjust C40 on the Duplex Generator board (Figure 3-10)for a reading of 0Hz ± 50 Hz on the CRT monitor frequency-error display.

3.3.7 WIDEBAND AMPLIFIER

NOTE

Perform extended alignment procedures 3.3.1A Peak Detector Zero and 3.3.1C DVM before making the following alignment.

1. Remove the RF input module (A17) from the system analyzer and remove the wideband amplifier cover from the RF input module. Reconnect the ribbon cable connector and the coax cable coming from the RF synthesizer module (A9) to the A17 module.
2. Select the Generate FM function, Gen/Mon Mtr display, and turn all modulation OFF. Set the Generate Frequency to 500.0000 MHz.
3. Select the Antenna Port and set the step attenuator to the 0 dB position.
4. Connect a calibrated wattmeter (HP4364) to the Antenna Port.
5. Adjust the RF variable level control on the front panel for a reading of 10.00 dBm on the external wattmeter.
6. Adjust R34 (OFFSET) on the wideband Amplifier board (see Figure 3-11) for a reading of 10.0 dBm ± 0.2 dBm on the CRT RF level display.
7. Adjust the RF variable level control on the front panel for a reading of 1.00 dBm on the external wattmeter.
8. Adjust R38 (GAIN) on the wideband Amplifier board for a reading of 1.0 dBm ± 0.2 dBm on the CRT RF level display.

NOTE

Due to the interaction between the two adjustments the procedure must be repeated a number of times.

9. Repeat steps 5-8 until no adjustment of R34 and R38 is required to obtain the 10.0 dBm and 1.0 dBm readings on the CRT RF level display.

3.3.8 WATTMETER

1. Remove System Analyzer bottom cover and wattmeter (A17A1) cover.
2. Select monitor function and Gen/Mon Mtr display.
3. Set the step attenuator on the front panel to the 10 dB position and select the RF IN/OUT port.
4. Set the Offset (R20) and Gain (R7) pots in the halfway position.
5. Connect a calibrated 1 watt 500 MHz generator, using a 600 MHz low-pass filter to filter out second harmonic, to the RF IN/OUT port.
6. Adjust the OFFSET (R20) pot on the wattmeter board (see Figure 3-12) for an input level reading of 1 watt on the CRT display.
7. Connect a calibrated 50 watt 500 MHz (again use a 600 MHz L-PF to the RF IN/OUT port).
8. Adjust the gain (R7) pot for an input level ready of 50 watts on the CRT display of 50 watts.

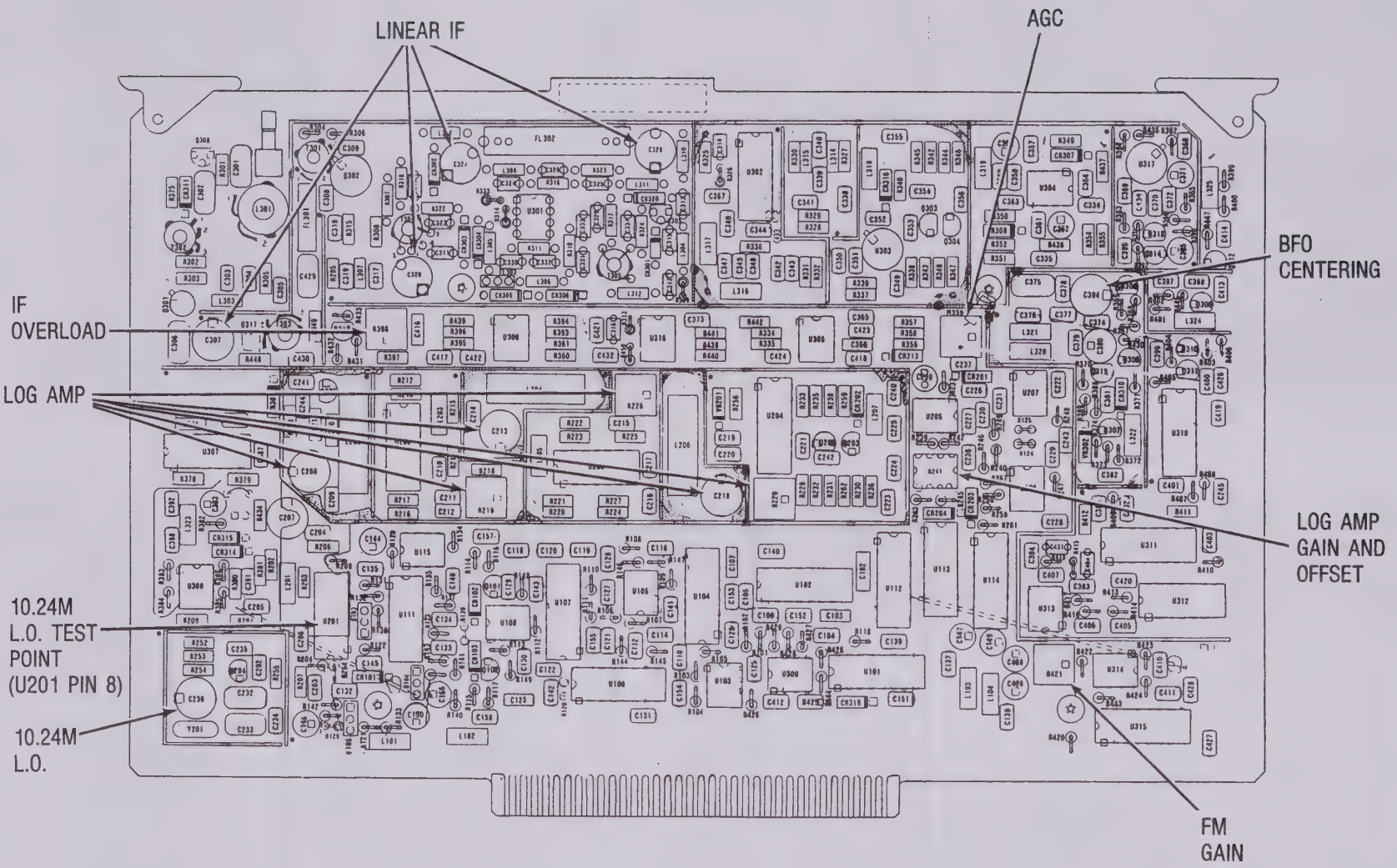

Figure 3-6. Receiver Board (A8) – Alignment Points

71642-11

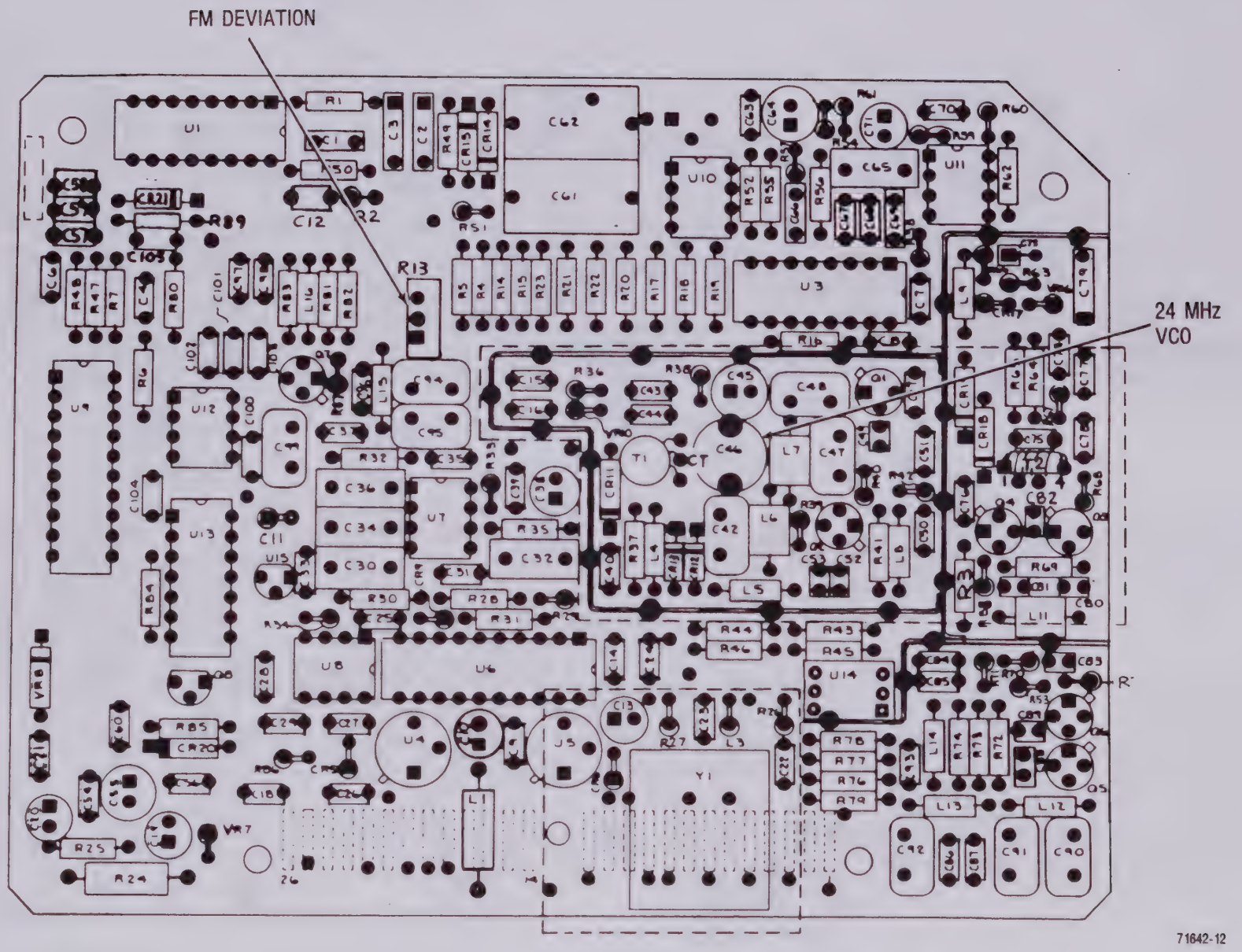

Figure 3-7. 60.5 MHz Loop Board (A9A4) Alignment Points

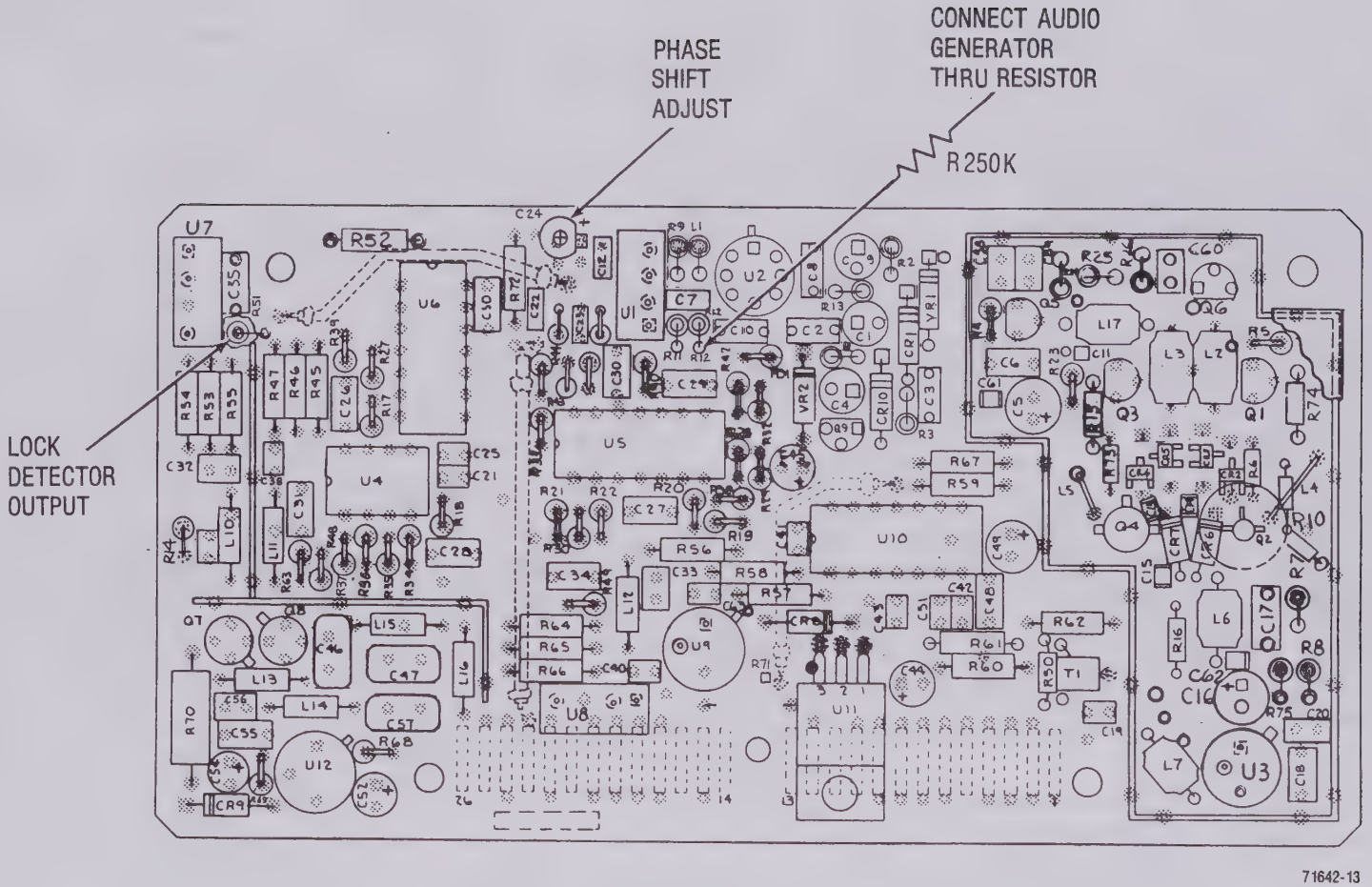

Figure 3-8. GHz Loop Board – Alignment Points

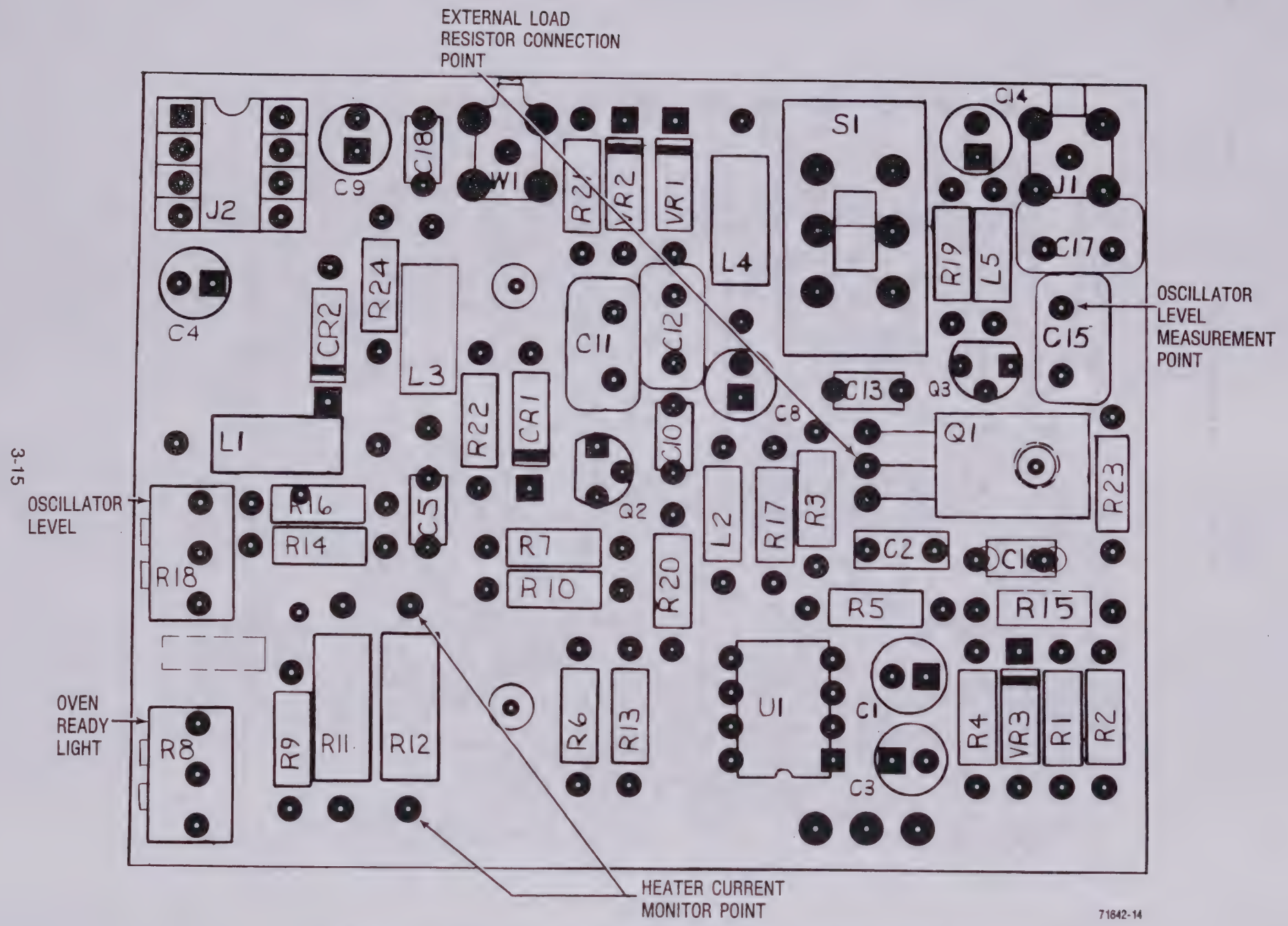

Figure 3-9. Frequency Standard Interface Board – Alignment Points

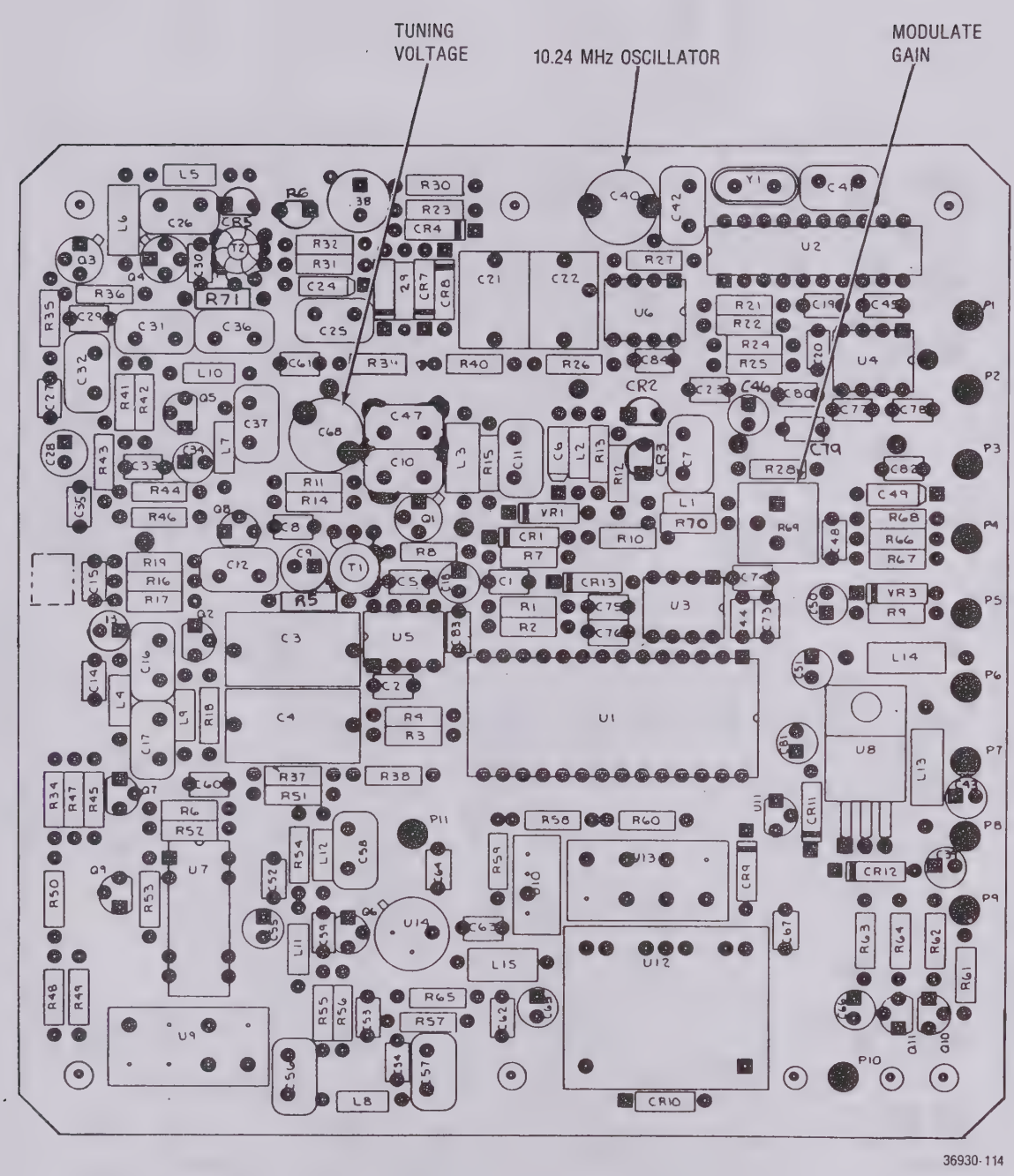

Figure 3-10. Duplex Generator Board (A17A3) – Alignment Points

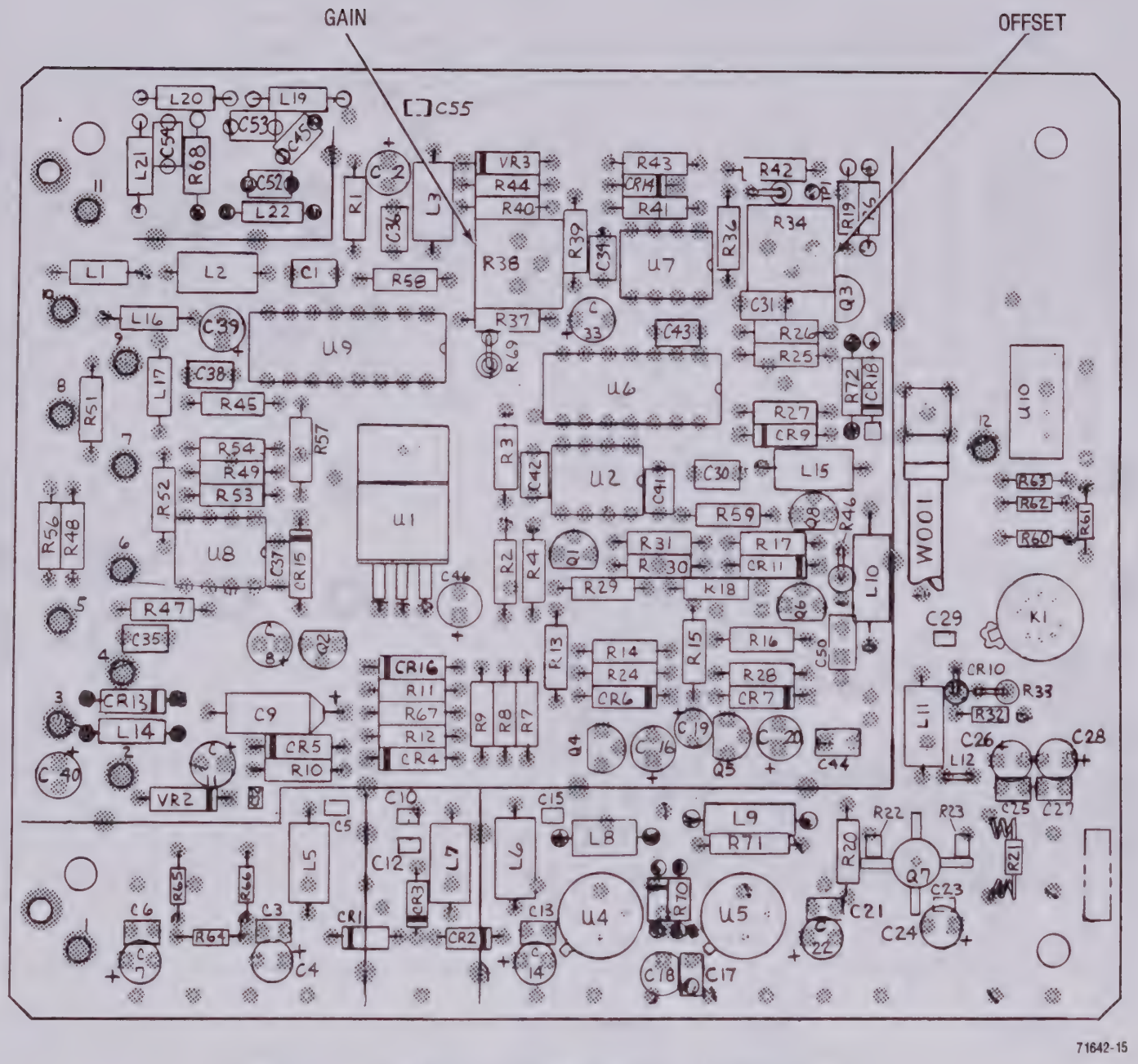

Figure 3-11. Wideband Amplifier Board – Alignment Points

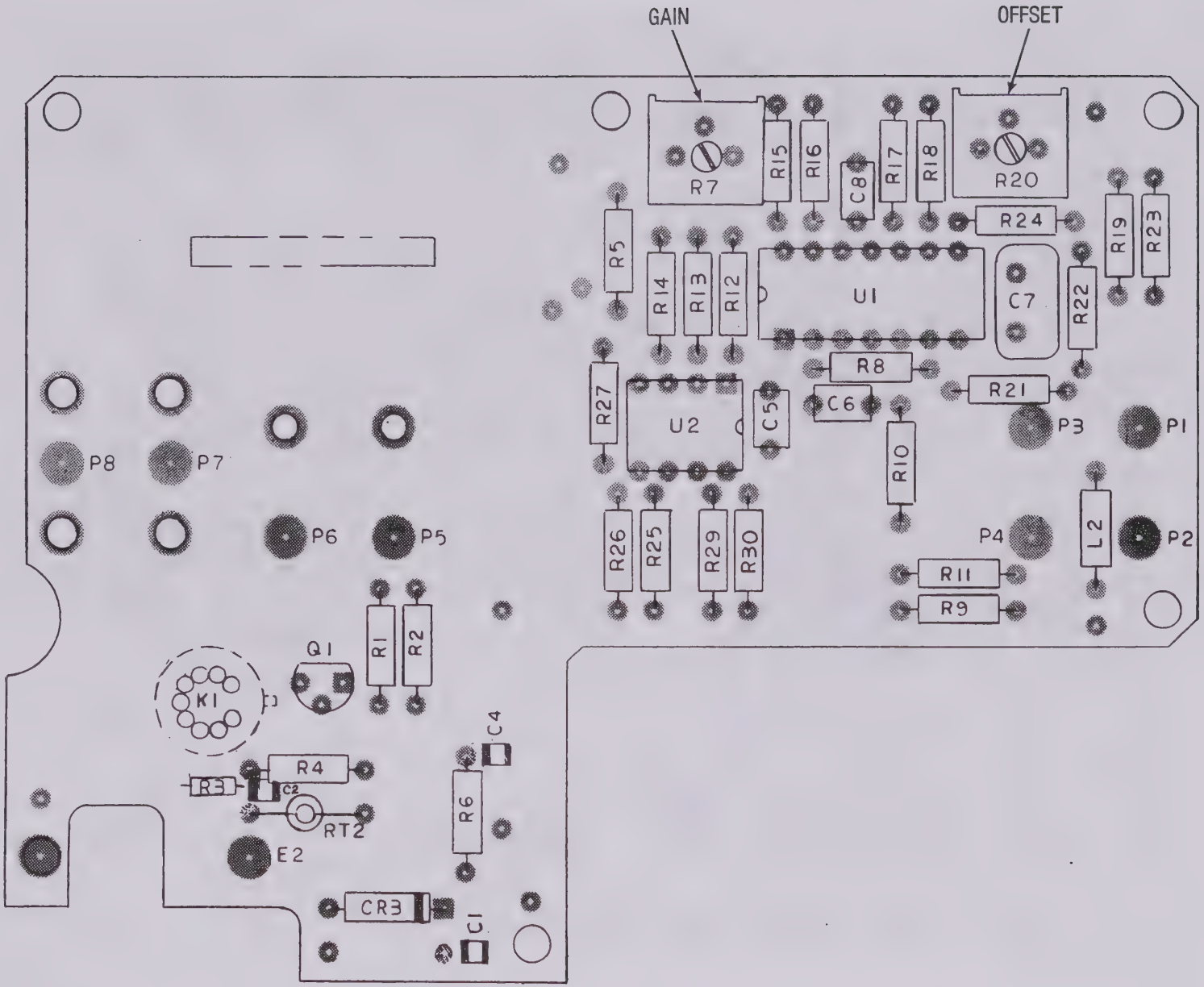

Figure 3-12. Wattmeter Board – Alignment Points

NOTE

Due to the interaction between the two adjustments the procedure must be repeated a number of times.

9. Repeat steps 5 through 9 until no adjustment of R20 and R7 is required to obtain the 1 watt and 50 watt readings on the CRT wattmeter display.

3.3.9 SCOPE COMPENSATION

1. Remove Front Panel Interface Board (A15) and place it on the appropriate extender card.
2. Turn System Analyzer ON and select DC scope display.
3. Apply a 1Vp-p square wave to the vertical scope input.
4. Adjust C11 on the Front Panel Interface board (see Figure 3-3) so that the waveform on the scope display has not overshoot or undershoot (see Figure 3-13).

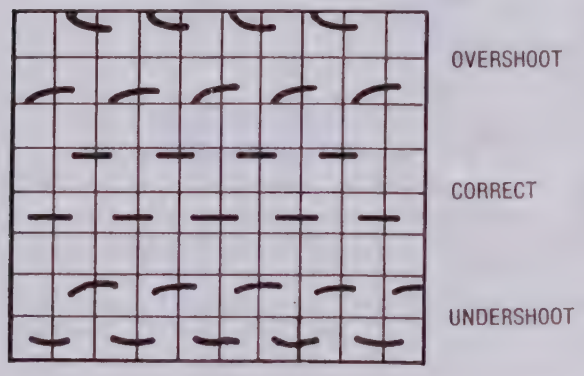

Figure 3-13. Scope Compensation

3.3.10 CATHODE VOLTAGE

CAUTION

Unless the factory alignment has been disturbed through repair or if the CRT adjustments CRT intensity bias, CRT horizontal gain, CRT vertical gain, and character generator, will not align, do not make the adjustment. Because of the presence of high voltages, +4 KV and −2 KV, on the module requiring adjustment. This adjustment will require a high voltage probe capable of measuring 2KV. Handle this monitor with extreme care when making this adjustment to avoid electrical shock.

1. Disconnect the System Analyzer from power source. Remove the High Voltage Power Supply module and place it on the appropriate extender card.
2. Connect power to the System Analyzer and turn the unit ON.
3. While monitoring the cathode voltage wire P2-2 (point 2 on High Voltage Power Supply printed wiring board). Adjust R37 (see Figure 3-14) for a cathode voltage of −2000 Vdc ± 10 Vdc.
4. When adjustment is completed disconnect power from System Analyzer and reinstall High Voltage Power Supply.

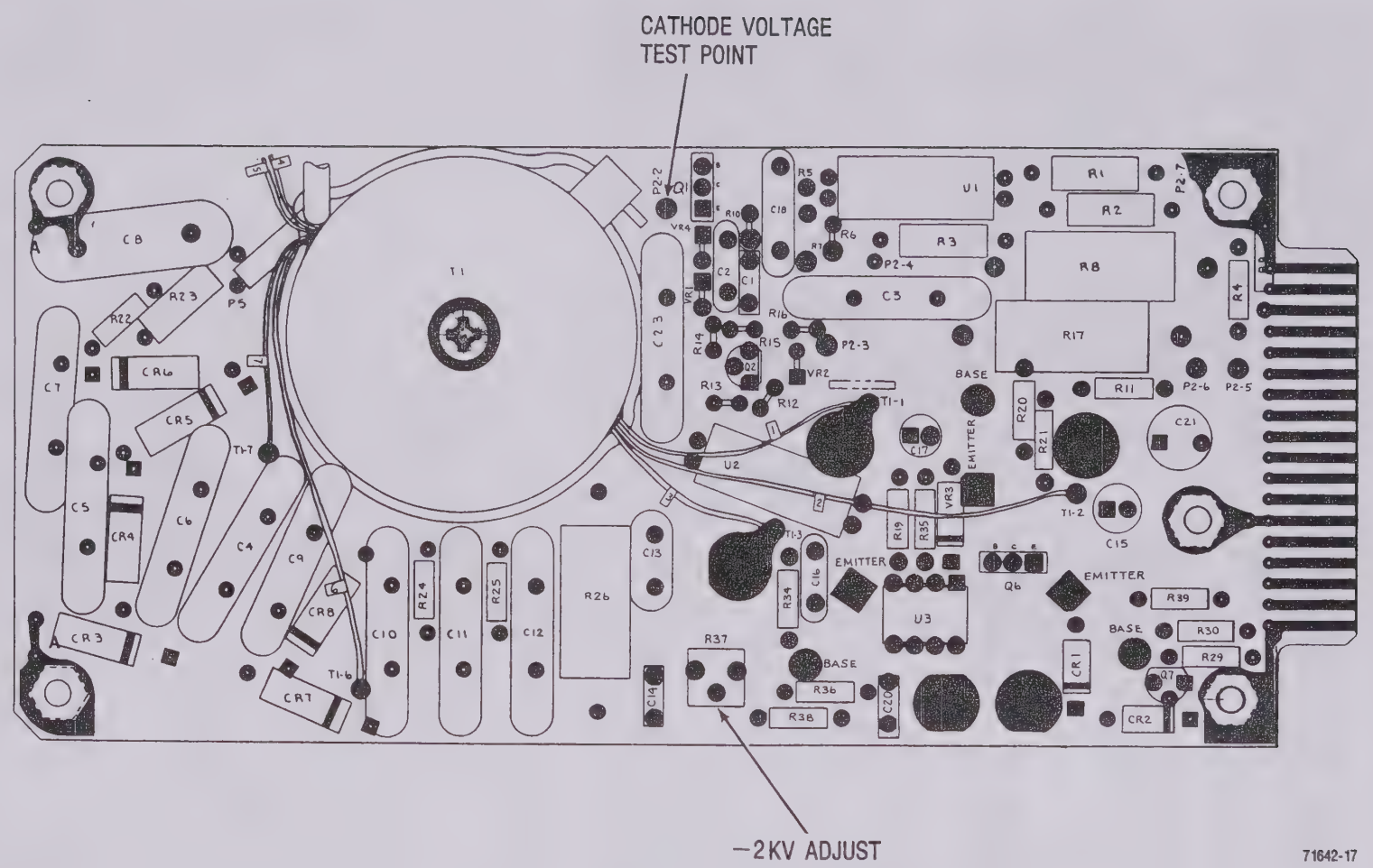

Figure 3-14. High Voltage Power Supply Board – Alignment Points

SECTION 4.
SYSTEM CHECKOUT AND TROUBLESHOOTING

4.1 INTRODUCTION

This section provides a procedure for system checkout and troubleshooting to help isolate system failures. Table 4-1 lists the necessary test equipment or its equivalent.

Table 4-1. Test Equipment for Checkout and Troubleshooting

Equipment	Part No. or Value
*RF Signal Generator	Motorola R-1201A
*RF Power Meter	Motorola S-1339A
*SINAD Meter	Motorola R-1013A
*Modulation Meter	Boonton 82AD
RF Power Source	1 watt to 100 watts

*An R2001 is suitable for use in place of these separate equipments.

4.2 SAFE HANDLING OF CMOS INTEGRATED-CIRCUIT DEVICES

Many of the integrated-circuit devices used in communications equipment are CMOS (complementary metal-oxide semiconductor) ICs. Because of their high open-circuit impedance, CMOS ICs are vulnerable to damage from static charges. Take care in handling, shipping, and servicing these ICs and the assemblies in which they are used.

Even though protection devices are provided in CMOS IC inputs, the protection is effective only against overvoltage in the range of hundreds of volts, such as that encountered in an operating system. In a system, circuit elements distribute static charges and load the CMOS circuits, decreasing the chance of damage. *However, CMOS circuits can be damaged by improper handling of the modules even in a system.*

To avoid damaging circuits, observe the following handling, shipping, and servicing precautions.

1. Before and while servicing a circuit module, particularly after moving within the service area, momentarily touch *both* hands to a bare metal, earth-grounded surface. This will discharge any static charge which may have accumulated on you.

NOTE

Wearing a "Conductive Wrist Strap" (Motorola No. RSX-4015A) will minimize static buildup during servicing.

WARNING

When wearing a "Conductive Wrist Strap," be careful near high-voltage sources. The "good ground" provided by the wrist strap also increases the danger of lethal shock from accidentally touching high-voltage sources.

2. Whenever possible, avoid touching any electrically conductive parts of the circuit module with your hands.
3. Circuit modules should not be inserted or removed with power applied to the unit.
4. When servicing a circuit module, avoid carpeted areas, dry environments, and certain types of clothing (silk, nylon, etc.) because they contribute to static buildup.
5. All electrically powered test equipment should be grounded. **Apply the ground lead** from the test equipment to the circuit module **before** connecting the **test probe.** Similarly, **disconnect the test probe before** removing the **ground lead.**
6. If you remove a circuit module from the system, lay it on a conductive surface (such as a sheet of aluminum foil) which is connected to ground through 100k of resistance.

WARNING

If the aluminum foil is connected directly to ground, be careful of possible electrical shock: don't touch both the foil and other electrical circuits at the same time.

7. When soldering, be sure the soldering iron is grounded.
8. Before connecting jumpers, replacing circuit components, or touching CMOS pins (to replace an integrated-circuit device), be sure to discharge any static buildup as described in precaution 1. Since voltage differences can exist across your body, use only one hand if you must touch pins on the CMOS device and associated board wiring.
9. When replacing a CMOS integrated-circuit device, leave the device in its metal rail container or conductive foam until you insert it into the printed circuit module.
10. Connect all low-impedance test equipment (such as pulse generators, etc.) to CMOS device inputs after you apply power to the CMOS circuitry. Similarly, disconnect such low-impedance equipment before you turn off the power.
11. Replacement modules shipped separately from the factory will be packaged in a conductive material. Any modules being transported from one area to another should be wrapped in a similar material (such as aluminum foil). NEVER USE NON-CONDUCTIVE MATERIAL for packaging these modules.

4.3 CHECKOUT AND TROUBLESHOOTING PROCEDURES

Table 4-2 lists steps to follow for both checkout and troubleshooting of the System Analyzer. For best results, follow the "Checkout Procedures" first; if you encounter problems as listed in the "Fault" column, follow the steps listed under "Troubleshooting Procedures" to correct them. Because of the complexity of the system, the table covers only the major failures and provides only a guide to the most probable failed module. The table also assumes that all tests prior to the failure point have been successfully completed, and thus the applicable circuits are okay.

Table 4-3 provides a list of the system test points and their functions. To aid in troubleshooting, test points are identified on block diagrams throughout this manual.

Table 4-2. System Checkout and Troubleshooting Procedures

Checkout Procedure	Fault	Troubleshooting Procedure
POWER ON		
1. Check that the ac-input select switch is at 120V. With the front panel's POWER switch at DC Off, connect the unit under test (UUT) to a 120-Vac line source. Verify that the AC and Oven Ready LEDs are on.	No AC indication.	1. Check the ac line cord and line fuse. 2. If system powers up normally when on, replace the AC LED.
2. Set the POWER switch to ON. Verify that after a warmup period, a display is visible on the CRT.	No Oven Ready indication.	1. Check for approximately +15 Vdc at J16 pin 1 of the A16 board. If it is not present, check the fuse on the A3 board. If the fuse is okay, replace the Battery Charger board (A3). 2. Check J16 pin 5 of A16 for +9 Vdc and J16 pin 6 for approximately +7.5 Vdc. If J16 pin 5 is okay and J16 pin 6 is 0 Vdc, replace the LED. If the +9 Vdc is not present on J16 pin 5, replace A16.
	System won't turn on.	1. Check for approximately +15 Vdc at TP3 of the Control board (A4). If it is not present, replace the Battery Charger board (A3). 2. Check for +5 Vdc at TP5 and +11.3 Vdc at TP6 of the Control board (A4). Check for +5.1 Vdc at U2 pin 16 of A4. If one of these voltages is not present, replace the Control board (A4).

Table 4-2. System Checkout and Troubleshooting Procedures (Cont)

Checkout Procedure	Fault	Troubleshooting Procedure
POWER ON (Cont)		
		3. Check for shorts to ground at TP1, TP2, TP3, TP4, TP5, TP6, and TP7 of the Output board (A5). If there is a short, remove A5 and recheck for shorts to ground on the A5 alone at all test points. If there is still a short, replace A5. If there is no short, locate the short in the system.
	System turns on, but there is no display on the CRT for any mode.	1. Remove the bottom cover of the System Analyzer. Check for approximately −4.3 Vdc at edge-connector pins 27 and 28 and for −4.69 Vdc at edge-connector pins 3 and 4 of the High-Voltage Power Supply (A1). If voltages are not present, replace A1. 2. Check for the presence of a 20-kHz square wave signal at U4 pins 11 and 14 of the Control board (A4). If signals are not present, replace A4. 3. Check for approximately +110 Vdc at TP1 and −110 Vdc at TP7 of the Output board (A5). If voltages are not present, replace A5. 4. In Gen/Mon Mtr display, check for the presence of a 110-Vp-p ramp signal at TP2, TP3, TP4, and TP5 of the Scope Amplifier board (A2). If signals are not present, replace A2. 5. If troubleshooting steps 1-4 check out okay, replace the CRT.
KEYBOARD		
1. Verify that each key has the proper effect by observing the Gen/Mon Mtr display and entering a frequency of 123.4567 MHz and a PL frequency of 890. Check for proper cursor-key operation. 2. Verify that the up and down DISPLAY, FUNCTION, and MODULATION keys work properly and their associated LEDs light up.	Only one key is inoperative. More than one key is inoperative or has the wrong effect.	Replace the defective key switch. Replace the Processor board.
NONVOLATILE MEMORY		
Select some random combination of DISPLAY, FUNCTION, and MODULATION modes. Simultaneously depress both cursor keys and, after a five-second delay, turn the system power OFF. Turn the system power back ON and verify that the same DISPLAY, FUNCTION, and MODULATION modes are present.	Any part of the nonvolatile memory fails to remember.	WARNING Lithium Battery Do not multilate or disassemble the battery cell. The lithium metal is a very active material that burns in the presence of water or high humidity. Do not put the battery in fire, attempt to charge it, heat it above 100°C, or solder directly to the cell. Do not overdischarge

Table 4-2. System Checkout and Troubleshooting Procedures (Cont)

Checkout Procedure	Fault	Troubleshooting Procedure
NONVOLATILE MEMORY (Cont)		
		the cell to a reverse voltage greater than 3 volts: the battery may burst and burn or release hazardous materials. 1. Troubleshooting Instructions: A. Turn the system POWER switch OFF and disconnect the unit from the primary power source. B. Remove the Processor board from the system and place it on a nonconductive surface. C. With a voltmeter, measure the dc voltage across the lithium battery in the lower left corner of the board. D. If the battery voltage is less than 2.4V, the cell is discharged and should be replaced. If the battery is okay, replace the entire Processor board (A14). E. If you need a new battery, obtain a new cell (P/N 60-80396A0) from Motorola. Replace the battery using the procedure in Part 2. *CAUTION* *Do not substitute another type of lithium battery. The specified battery was chosen with safety as a major consideration. Other lithium battery types may present a hazard when used in this system.* 2. Replacement Instructions: A. Turn the system POWER switch OFF and disconnect the unit from the primary power source. B. Remove the Processor board from the system and place it on a nonconductive surface. C. Cut the battery end of each of the two wires that connect the battery to the circuit board. D. Remove the battery from the hold-down clip.

Table 4-2. System Checkout and Troubleshooting Procedures (Cont)

Checkout Procedure	Fault	Troubleshooting Procedure
NONVOLATILE MEMORY (Cont)		
		E. Remove the new battery from its shipping container and put the old battery into the shipping container. Dispose of the battery as described in Part 3. F. With a soldering iron of 40 watts or lower, remove the old battery leads from the board. G. Being careful not to short the battery leads to each other or to the battery case, install the battery in the hold-down clip with the negative lead nearest the left edge of the card (with the circuit-board connector edge toward you). H. Solder the leads from the new battery into the printed wiring board at the points from which the old leads were removed. I. Trim the lead ends and put the board back into the system. 3. Disposal Instructions: A. Do not dispose of the lithium battery by putting it in the everyday trash. Lithium batteries are classified as hazardous material and must be disposed of accordingly. B. Consult state and local codes for the appropriate disposal procedure. C. Motorola will dispose of the battery if you send it in the shipping container (by the same method used to send the new battery to you) to the following address: Motorola, Inc. Return Goods Department 1313 East Algonquin Road Schaumburg, Ill 60196
MODULATION CAPABILITY		
1. Set the UUT to Generate FM function and select Gen/Mon Mtr display. On the Gen/Mon Mtr display, enter a DPL code of 111. Select Oscilloscope display and connect the Mod Out port to the vertical input port (Vert In). Set the Code Synthesizer mode to continuous (Cont) PL/DPL. On the scope, verify	No DPL (modulation) signal on the CRT.	1. Check TP1 of the Audio Synthesizer board (A10) for the DPL signal. If it is not present, replace the Audio Synthesizer board. 2. Check for the DPL signal on pin 64 of the Audio Synthesizer board. If it is not present, replace the IEEE Interface board (A13), or check for the presence of the A13 jumper card.

Table 4-2. System Checkout and Troubleshooting Procedures (Cont)

Checkout Procedure	Fault	Troubleshooting Procedure
MODULATION CAPABILITY (Cont)		
the presence of a DPL waveform whose amplitude is variable with the Code Synthesizer level control. 2. Move the MODULATION switch from CONT to OFF and verify that a short burst of 133 Hz is present before the output stops. 3. Move the MODULATION switch to BURST. Verify that a 133-Hz tone is output as long as the switch is held at BURST.		3. Check for the DPL signal at TP6 of the Audio Synthesizer board. If it is not present, replace the Audio Synthesizer board. 4. Check for the DPL signal at TP1 of the Scope Amplifier board (A2). If it is not present, replace the Scope/DVM Control board (A7). 5. If signal switching is okay to the Scope Amplifier board, proceed to the **SCOPE** Troubleshooting Procedure.
4. Select continuous (Cont) Tone A mode. Verify a Tone A output on the scope and at the speaker. 5. Select Tone Remote mode. Verify that moving the MODULATION switch from OFF to BURST generates a single Tone-Remote-Access Sequence. 6. Connect a microphone to the Mic port. Turn up the external level control (Ext Level) and verify that speaking into the mike produces a modulation signal on the scope display.	No external modulation on the CRT.	1. Check for the modulation signal at TP7 of the Audio Synthesizer board. If it is not present, replace the Audio Synthesizer board. 2. Check for the modulation signal on pin 66 of the Audio Synthesizer board. If it is not present, replace the IEEE Interface board (A13), or check for the presence of the A13 jumper card. 3. Continue troubleshooting at step 3 of "No DPL signal on the CRT."
FREQUENCY COUNTER		
1. Set the UUT to Generate CW function with an output frequency of 30 MHz at 0 dBm, as displayed on the Gen/Mon Mtr display. Connect the Antenna port to the Frequency Counter Input port (Counter In) of the UUT, and pull the RF Port Select knob to the Antenna position. Select Freq Counter display and verify a frequency reading of 30 MHz. 2. Set the UUT to Generate FM function and select Gen/Mon Mtr display. Turn the Code Synthesizer and external modulation sources OFF. Select Narrowband mode on the bandwidth switch (BW), and adjust the 1 KHz Level control for an FM-deviation	Frequency Counter does not work.	1. Check for a 1-kHz signal at TP9 of the Audio Synthesizer board (A10). If it is not present, check for the 10-MHz signal from the Frequency-Standard Interface board (A16) to the RF Synthesizer module (A9). If it is present, replace the RF Synthesizer module. If it is not present, replace the Frequency-Standard Interface board. 2. If the 1-kHz signal is present, check for the signal to be counted at pins 61 and 63 of the Processor Interface board (A11). If it is not present, replace the Front-Panel Interface board (A15). 3. If the signal is okay up to the Processor Interface board, replace the Processor Interface board.

Table 4-2. System Checkout and Troubleshooting Procedures (Cont)

Checkout Procedure	Fault	Troubleshooting Procedure
FREQUENCY COUNTER (Cont)		
reading of 5 kHz. Connect the Mod Out port to the Counter In port of the UUT. Select Freq Counter display and verify a nominal frequency reading of 1 kHz.		
DVM		
1. Maintaining the same conditions as with **FREQUENCY COUNTER** Checkout Procedure 2, select DVM display and AC mode on the display. Verify a DVM reading of 0.707 Vrms ±0.04 Vrms 2. Select DC mode and verify a dc reading of near zero volts.	DVM AC mode does not work.	1. Check for the DVM signal at pin 22 of the Front-Panel Interface board (A15). If it is not present, replace the Front-Panel Interface board. 2. Check for short bursts of the DVM AC signal at TP2 of the Scope/DVM Control board (A7). If the signal is not present at TP2, replace the Scope/DVM Control board. 3. If the signal is okay to TP2 of A7, replace the Processor Interface board (A11).
	DVM DC mode does not work.	1. Check for the dc input level attenuated by factors of 10 to less than 1 volt at pin 22 of the Front-Panel Interface board (A15). If it is not present, or if it is greater than 1 volt, replace the Front-Panel Interface board. 2. Check for the same voltage at TP2 of A7. If the signal is not present, replace A7. 3. If the signal is present at TP2, replace the Processor Interface board (A11).
SCOPE		
1. Set the UUT to Scope AC display and connect the scope's vertical input port (Vert In) to the Mod Out port. Enable the internal 1-kHz modulation source. Verify the operation of each position of the vertical-input range switch and the vertical vernier-gain control.	No vertical display.	1. Check for the input signal at TP1 of the Scope Amplifier board (A2). If it is not present, replace the Front-Panel Interface board (A15). 2. If the signal is okay at TP1, replace the Scope Amplifier board (A2).
2. With the same connection as in step 1, verify the operation of each position of the horizontal control and the horizontal timebase vernier. 3. With the horizontal control set to external mode (Ext), connect the external horizontal port (Ext Horiz) to the Mode Out port. Verify that a	No horizontal sweep.	1. Check for a voltage level between −2.0 Vdc and +2.0 Vdc at TP1 of the Scope Amplifier board (A2). If the voltage cannot be brought within range with either the vertical range attenuator or the vertical position control, replace the Front-Panel Interface board (A15). 2. If the voltage at TP1 is okay, replace the Scope Amplifier board (A2).

Table 4-2. System Checkout and Troubleshooting Procedures (Cont)

Checkout Procedure	Fault	Troubleshooting Procedure
SCOPE (Cont)		
horizontal line whole-length is variable with the horizontal vernier. 4. Connect the Vert In port to the Mod Out port on the UUT. Set the vertical and horizontal controls for a convenient display. Verify a steady sync is obtained in either Normal or Auto mode and that the point of triggering is adjustable with the Trig Level control. Remove the input signal and verify a horizontal sweep with Auto triggering and no horizontal sweep with Normal triggering.	No vertical sync.	1. Check for sync pulses at pin 12 of the Scope/DVM Control board (A7) and for a nominal SYNC PRESENT level of zero volts at pin 76. If either signal is not present, replace the Scope/DVM Control board. 2. If SYNC PULSE and the SYNC PRESENT lines are okay, replace the Scope Amplifier board (A2).
DISTORTION/SINAD METER		
1. Set the UUT for Generate FM function, Narrowband mode and Tone Memory display. On the Tone Table, set Tone A for 2000.0 Hz. 2. Select Gen/Mon Mtr display and continuous (Cont) Tone modulation. Turn the Ext Level and the 1 KHz Level controls OFF. Adjust the Code Synthesizer level control (Code Synth Lvl) for an FM deviation of 1.88 kHz, as read on the CRT display. 3. Without disturbing the Code Synth Lvl control, turn the Code Synthesizer OFF. Turn ON the 1 KHz Level control and adjust for an FM deviation of 7.5 kHz on the CRT display. 4. Connect the Mod Out port to the SINAD In port on the UUT. Verify a SINAD reading greater than 25 dB. 5. Set the Code Synthesizer to continuous mode (Cont) and verify a SINAD reading of 12 dB ± 1 dB.	Distortion/SINAD meter does not work.	1. If the DVM mode checks okay, replace the Scope/DVM Control board. 2. If the DVM mode does not check okay, go to the troubleshooting list for "DVM AC mode does not work."
SCAN MODE		
Set the UUT for Gen/Mon Mtr display. Verify that the RF Scan knob operates properly.		

Table 4-2. System Checkout and Troubleshooting Procedures (Cont)

Checkout Procedure	Fault	Troubleshooting Procedure
GENERATE MODE		
1. Set the UUT for Generate FM function at 200 MHz and select Gen/Mon Mtr display. Verify an RF-level-output display on the CRT.	No generate output.	1. Remove the RF cable between the RF Synthesizer module (A9) and the RF Input module (A17). Check for a nominal level of 0 dBm at the Synthesizer output. If there is no output, replace the RF Synthesizer module. 2. If the Synthesizer output is okay, replace the RF Input module (A17).
2. Connect the RF millivoltmeter with a 50-ohm termination to the Antenna port, and pull the RF Port Select knob on the UUT to the Antenna position. Set the RF step attenuator (Step) to 0 dB and adjust the Variable RF Level control for a displayed output level of +13 dBm. Verify that the RF millivoltmeter reads +13 dBm ±2 dBm.	No frequency modulation.	1. Check for the modulation signal at pin 30 of the RF Synthesizer module (A9). If the signal is okay, replace the RF Synthesizer module. 2. If the modulation signal is not present, proceed to the troubleshooting list under "No DPL (modulation) signal on the CRT."
3. Repeat step 2 at the center frequency of 800 MHz.		
4. Increase the RF step attenuator setting in 10-dB increments, and verify that the displayed RF level decreases in 10-dB increments.		
5. Set the Code Synthesizer MODULATION switch and the Ext Level control to OFF. Select Narrowband mode and adjust the 1 KHz Level control for a 5-kHz FM-deviation reading on the CRT display. Verify a 1-kHz tone at the speaker output.		
6. Connect the Modulation Meter to the UUT's Antenna Port and pull the RF Port Select knob to the Antenna position. Set the Modulation Meter for a deviation display of 5 kHz ±250 Hz.		
7. Select Wideband mode on the UUT and verify that the CRT displays a deviation of 20 kHz. Also verify that the Modulation Meter shows a peak deviation of 20 kHz ±1 kHz.		
8. Select Modulation display on the UUT and verify a peak-to-peak modulation display of 40 kHz ±2 kHz.		

Table 4-2. System Checkout and Troubleshooting Procedures (Cont)

Checkout Procedure	Fault	Troubleshooting Procedure
GENERATE MODE (Cont)		
9. Select Generate CW function and verify that there is no modulation on the CRT. 10. Set the UUT for Generate AM function and Gen/Mon Mtr display, and adjust for an RF output level of 0 dBm. Adjust the 1 KHz Level control for a 50% AM reading on the CRT. Verify that the Modulation Meter reads 50% ±10% AM. 11. Select Modulation display and verify a low-distortion 1-kHz sinewave. 12. Set the UUT for Generate SSB/ DSBSC function and verify a low-distortion 1-kHz sinewave on the CRT. 13. Set the UUT for Generate SWP 1-10 MHz function and Scope DC display. Verify a horizontal trace and a center-frequency display on the CRT. 14. Set the UUT for Generate SWP 0.01-1 MHz function and verify the same results as in step 13.		
POWER MONITOR MODE		
Set the UUT to POWER Monitor mode. Set the RF step attenuator at 30 dB, and select Gen/Mon Mtr display. Connect the RF power source to the RF In/Out port. Key the power source and verify a correct power reading on the CRT display. Unkey the power source.	Internal Wattmeter is wrong.	Replace RF Input Module (A17).
MONITOR MODE		
1. Set the UUT to Monitor FM function. Set the Squelch control to OFF and verify the signal-level LED (Sig Lvl) lights up and there is noise at the speaker. Turn the Squelch control fully ON and verify the Sig Lvl LED goes off and there is no noise at the speaker.	No Monitor function.	1. Apply a 10.7-MHz modulation carrier to the RF input. Check for normal receiver operation, but with reduced sensitivity. If the receiver is not working, replace the Receiver board (A8). 2. If the receiver checks okay and the Generate function is okay, replace the RF Input module (A17).

Table 4-2. System Checkout and Troubleshooting Procedures (Cont)

Checkout Procedure	Fault	Troubleshooting Procedure
MONITOR MODE (Cont)		
2. Repeat step 1 with the AM function.	No monitor frequency-error display.	Go to the troubleshooting list under "Frequency Counter does not work."
3. Repeat step 1 with the SSB/DSBSC function and enable the BFO. After the test, turn the BFO OFF.	Monitor frequency error is wrong.	1. Check for the IF signal at pin 91 of the Scope/DVM Control board (A7). If it is not present, replace the Receiver board (A8). 2. If the IF signal is present, replace the Scope/DVM Control board.
4. Select the Narrowband FM Monitor function at 300 MHz, and set the RF step attenuator to 0 dB. Connect the RF Signal Generator to the RF In/Out port and the SINAD Meter to the Demod Out port. Set the RF Signal Generator for a center frequency of 300 MHz and for 3 kHz FM at a 1-kHz rate. Adjust the RF output level from the Signal Generator for a 10-dB reading on the SINAD Meter. Verify that the Signal Generator's level is less than −103 dBm (1.5 μVrms).		
5. Using the Modulation Meter, calibrate the RF Signal Generator for 3 kHz FM at a 1-kHz rate. Set the Generator for a nominal output level of −60 dBm and connect it to the Antenna port of the UUT. Select Gen/Mon Mtr display and verify a monitor deviation reading of 3 kHz ± 150 Hz.		
6. Calibrate the RF Signal Generator for 50 kHz FM at a 1-kHz rate. Select Wideband mode on the UUT and verify a reading of 50 kHz ± 2.5 kHz on the CRT's deviation display.		
7. Calibrate the RF Signal Generator for 30% AM at a 1-kHz rate. Set the Generator for a nominal output level of −60 dBm and connect it to the Antenna port of the UUT. Select Monitor AM function and Narrowband mode. Verify a monitor-AM reading of 30% ±5%.		
8. Monitor the percent AM displayed on the CRT while increasing the RF level out of the Signal Generator. Verify that the IF-Overload Warning occurs before the displayed AM exceeds a reading of 30% ± 5%.		

Table 4-2. System Checkout and Troubleshooting Procedures (Cont)

Checkout Procedure	Fault	Troubleshooting Procedure
MONITOR MODE (Cont)		
9. Select Modulation display on the UUT and verify the presence of the received modulation signal. 10. Select Gen/Mon Mtr display and Wideband mode on the UUT. Vary the center frequency on either the UUT or the Signal Generator, and verify that the frequency-error display properly represents the difference between the UUT's center frequency and the Signal Generator's center frequency. 11. Select IF display on the UUT and verify an IF envelope on the CRT.		
SPECTRUM ANALYZER		
1. Set the UUT for Monitor function at 300 MHz, Spectrum Analyzer display, and 0-dB input attenuation. Connect the Signal Generator to the Antenna port on the UUT. Verify a spectral amplitude of −40 dBm ± 3 dB on the CRT display. Increase the RF step attenuator setting in 10-dB increments, verifying that the spectral amplitude decreases by 10 dB ± 2 dB with each step. 2. Verify the dispersion control (Dispr) works.	No spectrum-analyzer sweep. Spectrum display is wrong.	1. Check pin 67 of the Processor Interface board (A11) for a 100-Hz square wave. If it is not present, replace the Processor Interface board. 2. If there is a 100-Hz signal, replace the Scope/DVM Control board (A7). Replace the Receiver board (A8).
DUPLEX GENERATOR		
1. Select Duplex Gen display and Monitor FM function at a monitor frequency of 100 MHz. Set the offset frequency to 45 MHz. With the Image switch set on Low, verify a displayed Duplex frequency of 55 MHz. Set the Image switch to High, and verify a displayed Duplex frequency of 145 MHz.	No Duplex output.	Replace the RF Input module (A17).

Table 4-2. System Checkout and Troubleshooting Procedures (Cont)

Checkout Procedure	Fault	Troubleshooting Procedure
DUPLEX GENERATOR (Cont)		
2. Set the offset frequency on the screen for 0 to 10 MHz, and verify displayed Duplex frequencies from 100 to 110 MHz. 3. Set the UUT to Generate FM function with Duplex Gen display. With the Code Synthesizer and the external modulation sources OFF, adjust the 1 KHz Level control for an FM-deviation reading of 20 kHz on the CRT. Select Monitor function and set the offset frequency to 0 Hz. Connect the DUPLEX GEN Output port to the Antenna port, and verify an FM-deviation reading of 20 kHz ± 1 kHz on the CRT.		

Table 4-3. Test-Point Identification
(All test points are located near the top edge of the board. Count them from left to right, as you face the component-side of the board.)

Test-Point Number	Signal Name
Scope Amplifier Board (A2)	
1	VERTICAL DRIVE
2	VERTICAL DEFLECTION DRIVE
3	$\overline{\text{VERTICAL DEFLECTION DRIVE}}$
4	HORIZONTAL DEFLECTION DRIVE
5	$\overline{\text{HORIZONTAL DEFLECTION DRIVE}}$
6	HORIZONTAL DRIVE
7	CRT Z-AXIS
8	TIME BASE OUTPUT
9	FOCUS TV
10	INTENSITY TV
Low-Voltage Power Supply – Battery Charger Board (A3)	
1	FREQUENCY STANDARD SUPPLY
2	BATTERY CHARGER SUPPLY
Low-Voltage Power Supply – Control Board (A4)	
1	DC CURRENT SENSE
2	AC CURRENT SENSE
3	FREQUENCY STANDARD SUPPLY
4	ERROR VOLTAGE REFERENCE
5	V_L
6	V_S

Table 4-3. Test-Point Identification (Cont)

Test-Point Number	Signal Name
Low-Voltage Power Supply – Output Board (A5)	
1	+110V
2	+33V
3	+12V
4	−5V
5	+5V
6	−12V
7	−110V
Low-Voltage Power Supply – Switcher Board (A6)	
1	$\overline{\text{AC DRIVE}}$
2	AC DRIVE
3	$\overline{\text{DC DRIVE}}$
4	DC DRIVE
Scope/DVM Control Board (A7)	
1	VERTICAL CHARACTER SYNC
2	EXT DVM TO A/D
3	+15V
4	POSITIVE PEAK DETECTOR
5	INT DVM TO A/D
6	NEGATIVE PEAK DETECTOR
7	CARRIER + MOD LEVEL
8	CHARACTER GEN RESET
9	GND
10	GND
11	+8V
12	−8V

Table 4-3. Test-Point Identification (Cont)

Test-Point Number	Signal Name
Audio Synthesizer Board (A10)	
1	SYNTH DPL AUDIO
2	DPL CLOCK
3	UNFILTERED DPL
4	SYNTH D/A OUTPUT
5	GROUND
6	COMPOSITE MODULATION AUDIO
7	COMPOSITE EXTERNAL MOD AUDIO
8	SYNTHESIZER CLOCK 104,857.6 HZ
9	1 KHZ MODULATION SOURCE
Processor Interface Board (A11)	
1	A/D INPUT
2	DVM/FREQ COUNTER SELECT
3	FREQUENCY COUNTER INPUT
Processor (A14)	
1	CHARACTER LINE CLOCK
2	CHARACTER ROW CLOCK
3	250 KHZ
4	DOT CLOCK
5	$\overline{\text{RESET}}$
6	$\overline{\text{HALT}}$
7	Q
8	R/W
9	E
Front-Panel Interface Board (A15)	
1	ATTENUATOR BUFFER OUTPUT

SECTION 5.
SYSTEM WIRELIST AND PARTS LIST — SYSTEM MOTHERBOARD (A19)

With the exception of the Frequency-Standard Interface board (A16), the RF Input module (A17), and the Front Panel assembly (A18), all modules plug into sockets mounted on the System Motherboard (A19). Ribbon cables connect the A16 and A17 to the A19 board. The Front-Panel Left Flex and Front-Panel Right Flex connect the A18 to the A19.

The System Motherboard provides most of the interconnections between modules. These interconnections are specified by the System Motherboard wirelist (Table 5-1). Because of shielding requirements, some interconnections must be made with co-axial cables. These interconnections are specified in the system wirelist (Table 5-2).

The printed wiring board assembly and parts list for the System Motherboard are shown after these wirelists in Figure 5-1. Following that, Figure 5-2 coordinates views of the System Analyzer's back and top (cover removed) with a chassis parts list, and Figure 5-3 coordinates a view of the Analyzer's bottom (cover removed) with the system parts list.

Table 5-1. System Motherboard Wirelist (Sheet 1 of 57)

TABLE OF CONTENTS	
CONNECTOR	**SHEET**
E1-E15	2
J1	2
J2	3
J3	6
J4	8
J5	10
J6	12
J7	14
J8	18
J9	21
J10	24
J11	26
J12	31
J13	35
J14	39
J15	43
J16	47
J17	47
J18	49
J19	50
J20	50
P1	50
P2	54
S1	57
V1	57
V2	57
NE1	57
NE2	57

Table 5-1. System Motherboard Wirelist (Sheet 2 of 57)

FROM	TO	NAME
E1	J10-13,14 J12-15, J13-15, J14-31	EXT MOD IN
E2	C1-1 R1-1	FP MOD OUT
E3	C2-1 R2-1	DEMOD OUT
E4		
E6	J7-81,82	SPKR AUDIO
E8	J15-1	EXT IN
E9	J3-33,34 S1-9 NE1-1 V1-1	AC HOT
E10	J3-29,30, S1-2,6, NE2-2, V2-2	AC NEUT
E11	GND	AC GND
E12	J3-11,12	BATT CHG
E13	J6-7,8,9,10,11,12,13,14 J4-9,10 J7-97	DC IN
E14	GND	DC GND
E15	J9-39,40	10 MHZ REF
HIGH VOLTAGE SUPPLY		
J1-1	GND	GND
J1-2	GND	GND
J1-3	J2-46	HV REFERENCE
J1-4	J2-46	HV REFERENCE
J1-5	J4-17,18	$\overline{\text{HV CHOPPER DR}}$
J1-6	J4-17,18	$\overline{\text{HV CHOPPER DR}}$
J1-7	J4-19,20	HV CHOPPER DR
J1-8	J4-19,20	HV CHOPPER DR
J1-9		
J1-10		
J1-11	+12V	+12V
J1-12	+12V	+12V
J1-13		
J1-14		
J1-15		
J1-16		
J1-17	GND	GND
J1-18	GND	GND
J1-19		
J1-20		

Table 5-1. System Motherboard Wirelist (Sheet 3 of 57)

FROM	TO	NAME
J1-21	J2-21	INTENSITY TV
J1-22	J2-21	INTENSITY TV
J1-23	J2-55	ASTIGMATISM
J1-24	J2-55	ASTIGMATISM
J1-25	J2-57	GEOMETRY
J1-26	J2-57	GEOMETRY
J1-27	J2-26	INTEN SAMPLE V
J1-28	J2-26	INTEN SAMPLE V
J1-29	J2-3	CRT Z-AXIS
J1-30	J2-3	CRT Z-AXIS
J1-31	J2-54	FOCUS SAMPLE V
J1-32	J2-54	FOCUS SAMPLE V
J1-33	J2-28	FOCUS TV
J1-34	J2-28	FOCUS TV
J1-35	GND	GND
J1-36	GND	GND
SCOPE AMPLIFIER MODULE		
J2-1	GND	GND
J2-2	GND	GND
J2-3	J1-29,30	CRT Z-AXIS
J2-4		
J2-5		
J2-6		
J2-7	J7-18	SCOPE SWP CNTL 2
J2-8		
J2-9	J7-16	SCOPE SWP CNTL 1
J2-10	J7-40	HORIZ TIME BASE EN
J2-11	J7-14	SCOPE SWP CNTL 0
J2-12	J7-72	INT SCOPE HORIZ
J2-13	J7-88	SWEEP BLANKING
J2-14	J7-84	SCOPE MODE ENABLE
J2-15	J7-39	EXT HORIZ ENABLE
J2-16		

Table 5-1. System Motherboard Wirelist (Sheet 4 of 57)

FROM	TO	NAME
J2-17	J15-50	HORIZ TO SCOPE AMP
J2-18		
J2-19	J7-20	SCOPE SWP CNTL 3
J2-20	J7-12	TRIG PULSE
J2-21	J1-21,22	INTENSITY TV
J2-22	J7-76	$\overline{\text{SYNC PRESENT}}$
J2-23	J7-90	$\overline{\text{SCOPE-AXIS}}$
J2-24	P1-34	AUTO/NOR TRIG SEL
J2-25		
J2-26	J1-27,28	INTENSITY SAMPLE VOLT
J2-27		
J2-28	J1-33,34	FOCUS TV
J2-29	J7-58	−8V
J2-30	J7-58	−8V
J2-31	J7-56 P1-15	+8V
J2-32	J7-56 P1-15	+8V
J2-33	−12V	−12V
J2-34	−12V	−12V
J2-35	+12V	+12V
J2-36	+12V	+12V
J2-37	+33V	+33V
J2-38	+33V	+33V
J2-39	−5V	−5V
J2-40	−5V	−5V
J2-41	+5V	+5V

Table 5-1. System Motherboard Wirelist (Sheet 5 of 57)

FROM	TO	NAME
J2-42	+5V	+5V
J2-43	P1-11	INTENSITY LEVEL
J2-44		
J2-45	P1-25,26	HORIZ POSITION
J2-46	J1-3,4	HIGH VOLTAGE REF
J2-47		
J2-48	J7-74	VERT TO SCOPE AMP
J2-49		
J2-50	J20-2	TRACE ROTATION
J2-51		
J2-52		
J2-53	P1-16	SWEEP VERNIER VOLT
J2-54	J1-31,32	FOCUS SAMPLE VOLT
J2-55	J1-23,24	ASTIGMATISM
J2-56		
J2-57	J1-25,26	GEOMETRY
J2-58		
J2-59	P1-10	FOCUS LEVEL
J2-60		
J2-61		
J2-62		
J2-63	+110V	+110V
J2-64	+110V	+110V
J2-65		
J2-66		
J2-67	−110V	−110V

Table 5-1. System Motherboard Wirelist (Sheet 6 of 57)

FROM	TO	NAME
J2-68	−110V	
J2-69		
J2-70		
J2-71	GND	GND
J2-72	GND	GND
BATTERY CHARGER MODULE		
J3-1	GND	GND
J3-2	GND	GND
J3-3	GND	GND
J3-4	GND	GND
J3-5	+5V	+5V
J3-6	+5V	+5V
J3-7	+5V	+5V
J3-8	+5V	+5V
J3-9	J4-24, J15-94 J12,13-20	$\overline{\text{PWR ON}}$
J3-10		
J3-11	E12	BATT CHG
J3-12	E12	BATT CHG
J3-13	J4-26	AC VOLTAGE SENSE
J3-14		
J3-15	J16-1 J4-34,36	FREQ STD SUPPLY
J3-16	J16-1 J4-34,36	FREQ STD SUPPLY
J3-17	−12V	−12V
J3-18	J9-45,46	−5V TO SYNTH
J3-19		BLANK FOR ISOLATION

Table 5-1. System Motherboard Wirelist (Sheet 7 of 57)

FROM	TO	NAME
J3-20		BLANK FOR ISOLATION
J3-21		BLANK FOR ISOLATION
J3-22		BLANK FOR ISOLATION
J3-23		BLANK FOR ISOLATION
J3-24		BLANK FOR ISOLATION
J3-25		BLANK FOR ISOLATION
J3-26		BLANK FOR ISOLATION
J3-27		BLANK FOR ISOLATION
J3-28		BLANK FOR ISOLATION
J3-29	E10 S1-2,6 NE2-2 V2-2	AC NEUT
J3-30	E10 S1-2,6 NE2-2 V2-2	AC NEUT
J3-31	S1-8 V2-1 NE2-1	PRIMARY #2
J3-32	S1-8 V2-1 NE2-1	PRIMARY #2
J3-33	E9 S1-9 NE1-1 V1-1	AC HOT
J3-34	E9 S1-9 NE1-1 V1-1	AC HOT
J3-35	S1-5 NE1-2 V1-2	PRIMARY #1
J3-36	S1-5 NE1-2 V1-2	PRIMARY #1
J3-37	S1-1	220 LOW
J3-38	S1-1	220 LOW
J3-39	J6-47,48	V_c-
J3-40	J6-47,48	V_c-
J3-41	S1-3 J6-53,54	110 LOW
J3-42	S1-3 J6-53,54	110 LOW
J3-43	J6-55,56	V_c+

Table 5-1. System Motherboard Wirelist (Sheet 8 of 57)

FROM	TO	NAME
J3-44	J6-55,56	V_c+
J3-45		BLANK FOR ISOLATION
J3-46		BLANK FOR ISOLATION
J3-47		BLANK FOR ISOLATION
J3-48		BLANK FOR ISOLATION
J3-49		BLANK FOR ISOLATION
J3-50		BLANK FOR ISOLATION
POWER SUPPLY CONTROL MODULE		
J4-1	GND	GND
J4-2	GND	GND
J4-3	GND	GND
J4-4	GND	GND
J4-5	J6-5	DC CURR SENSE RTN
J4-6	J6-5	DC CURR SENSE RTN
J4-7	J6-6	DC CURR SENSE
J4-8	J6-6	DC CURR SENSE
J4-9	J6-7,8,9,10,11,12,13,14 E13 J7-97	DC IN
J4-10	J6-7,8,9,10,11,12,13,14 E13 J7-97	DC IN
J4-11	+12V	+12V
J4-12	−12V	−12V
J4-13	+5V	+5V
J4-14	+5V	+5V
J4-15	−5V	−5V
J4-16	−5V	−5V
J4-17	J1-5,6	$\overline{\text{HV CHOPPER DR}}$
J4-18	J1-5,6	$\overline{\text{HV CHOPPER DR}}$

Table 5-1. System Motherboard Wirelist (Sheet 9 of 57)

FROM	TO	NAME
J4-19	J1-7,8	HV CHOPPER DR
J4-20	J1-7,8	HV CHOPPER DR
J4-21	J6-15,16	DC BUS
J4-22	J6-15,16	DC BUS
J4-23	J15-91	$\overline{\text{PWR OFF}}$
J4-24	J15-94 J3-9 J12,13-20	$\overline{\text{PWR ON}}$
J4-25	J15-97	AC LED
J4-26	J3-13	AC VOLTAGE SENSE
J4-27	J6-32	$\overline{\text{DC DRIVE}}$
J4-28	J6-32	$\overline{\text{DC DRIVE}}$
J4-29	J6-33	DC DRIVE
J4-30	J6-33	DC DRIVE
J4-31	J6-34	$\overline{\text{RELAY ON}}$
J4-32	J6-34	$\overline{\text{RELAY ON}}$
J4-33	J6-35	$\overline{\text{AC DRIVE}}$
J4-34	J3-15,16 J16-1	FREQ STD SUPPLY
J4-35	J6-36	AC DRIVE
J4-36	J16-1 J3-15,16	FREQ STD SUPPLY
J4-37	J15-98	DC LED
J4-38	J5-34	AC CURRENT SENSE
J4-39	J5-35	$\overline{\text{AC CURRENT SENSE}}$
J4-40	GND	GND
J4-41	GND	GND
J4-42	GND	GND
J4-43		
J4-44		

Table 5.1. System Motherboard Wirelist (Sheet 10 of 57)

FROM	TO	NAME
J4-45		
J4-46		
J4-47		
J4-48		
J4-49		
J4-50		
POWER SUPPLY OUTPUT MODULE		
J5-1	GND	GND
J5-2	GND	GND
J5-3	GND	GND
J5-4	GND	GND
J5-5	+12V	+12V
J5-6	+12V	+12V
J5-7	+12V	+12V
J5-8	+5V	+5V
J5-9	+5V	+5V
J5-10	+5V	+5V
J5-11	−5V	−5V
J5-12	−5V	−5V
J5-13	−12V	−12V
J5-14	−12V	−12V
J5-15	J6-17,18,19,20	XFMR DR DC
J5-16	J6-17,18,19,20	XFMR DR DC
J5-17	J6-17,18,19,20	XFMR DR DC

Table 5.1. System Motherboard Wirelist (Sheet 11 of 57)

FROM	TO	NAME
J5-18	J6-17,18,19,20	XFMR DR DC
J5-19	J6-21,22,23,24,25,26,27	DC CT
J5-20	J6-21,22,23,24,25,26,27	DC CT
J5-21	J6-21,22,23,24,25,26,27	DC CT
J5-22	J6-21,22,23,24,25,26,27	DC CT
J5-23	J6-21,22,23,24,25,26,27	DC CT
J5-24	J6-21,22,23,24,25,26,27	DC CT
J5-25	J6-21,22,23,24,25,26,27	DC CT
J5-26	J6-28,29,30,31	$\overline{\text{XFMR DR DC}}$
J5-27	J6-28,29,30,31	$\overline{\text{XFMR DR DC}}$
J5-28	J6-28,29,30,31	$\overline{\text{XFMR DR DC}}$
J5-29	J6-28,29,30,31	$\overline{\text{XFMR DR DC}}$
J5-30	−110V	−110V
J5-31	+33V	+33V
J5-32	+33V	+33V
J5-33	+110V	+110V
J5-34	J4-38	AC CURRENT SENSE
J5-35	J4-39	$\overline{\text{AC CURRENT SENSE}}$
J5-36	GND	GND
J5-37	GND	GND
J5-38	GND	GND
J5-39		BLANK FOR ISOLATION
J5-40		BLANK FOR ISOLATION
J5-41		BLANK FOR ISOLATION
J5-42		BLANK FOR ISOLATION

Table 5.1. System Motherboard Wirelist (Sheet 12 of 57)

FROM	TO	NAME
J5-43		BLANK FOR ISOLATION
J5-44		BLANK FOR ISOLATION
J5-45		BLANK FOR ISOLATION
J5-46		BLANK FOR ISOLATION
J5-47	J6-49,50	$\overline{\text{XFMR DR AC}}$
J5-48	J6-49,50	$\overline{\text{XFMR DR AC}}$
J5-49	J6-51,52	XFMR DR AC
J5-50	J6-51,52	XFMR DR AC
POWER SUPPLY SWITCHER MODULE		
J6-1	GND	GND
J6-2	GND	GND
J6-3	GND	GND
J6-4	GND	GND
J6-5	J4-5,6	DC CURR SENSE RTN
J6-6	J4-7,8	DC CURR SENSE
J6-7	E13 J4-9,10 J7-97	DC IN
J6-8	E13 J4-9,10 J7-97	DC IN
J6-9	E13 J4-9,10 J7-97	DC IN
J6-10	E13 J4-9,10 J7-97	DC IN
J6-11	E13 J4-9,10 J7-97	DC IN
J6-12	E13 J4-9,10 J7-97	DC IN
J6-13	E13 J4-9,10 J7-97	DC IN
J6-14	E13 J4-9,10 J7-97	DC IN
J6-15	J4-21,22	DC BUS
J6-16	J4-21,22	DC BUS

Table 5.1. System Motherboard Wirelist (Sheet 13 of 57)

FROM	TO	NAME
J6-17	J5-15,16,17,18	XFMR DR DC
J6-18	J5-15,16,17,18	XFMR DR DC
J6-19	J5-15,16,17,18	XFMR DR DC
J6-20	J5-15,16,17,18	XFMR DR DC
J6-21	J5-19,20,21,22,23,24,25	DC CT
J6-22	J5-19,20,21,22,23,24,25	DC CT
J6-23	J5-19,20,21,22,23,24,25	DC CT
J6-24	J5-19,20,21,22,23,24,25	DC CT
J6-25	J5-19,20,21,22,23,24,25	DC CT
J6-26	J5-19,20,21,22,23,24,25	DC CT
J6-27	J5-19,20,21,22,23,24,25	DC CT
J6-28	J5-26,27,28,29	$\overline{\text{XFMR DR DC}}$
J6-29	J5-26,27,28,29	$\overline{\text{XFMR DR DC}}$
J6-30	J5-26,27,28,29	$\overline{\text{XFMR DR DC}}$
J6-31	J5-26,27,28,29	$\overline{\text{XFMR DR DC}}$
J6-32	J4-27,28	$\overline{\text{DC DRIVE}}$
J6-33	J4-29,30	DC DRIVE
J6-34	J4-31,32	$\overline{\text{RELAY ON}}$
J6-35	J4-33	$\overline{\text{AC DRIVE}}$
J6-36	J4-35	AC DRIVE
J6-37	GND	GND
J6-38	GND	GND
J6-39		BLANK FOR ISOLATION
J6-40		BLANK FOR ISOLATION
J6-41		BLANK FOR ISOLATION
J6-42		BLANK FOR ISOLATION
J6-43		BLANK FOR ISOLATION

Table 5.1. System Motherboard Wirelist (Sheet 14 of 57)

FROM	TO	NAME
J6-44		BLANK FOR ISOLATION
J6-45		BLANK FOR ISOLATION
J6-46		BLANK FOR ISOLATION
J6-47	J3-39,40	V_c^-
J6-48	J3-39,40	V_c^-
J6-49	J5-47,48	$\overline{\text{XFMR DR AC}}$
J6-50	J5-47,48	$\overline{\text{XFMR DR AC}}$
J6-51	J5-49,50	XFMR DR AC
J6-52	J5-49,50	XFMR DR AC
J6-53	S1-3 J3-41,42	110 LOW
J6-54	S1-3 J3-41,42	110 LOW
J6-55	J3-43,44	V_c^+
J6-56	J3-43,44	V_c^+
J6-57		BLANK FOR ISOLATION
J6-58		BLANK FOR ISOLATION
J6-59		BLANK FOR ISOLATION
J6-60		BLANK FOR ISOLATION
SCOPE/DVM CONTROL MODULE		
J7-1	GND	DVM GND
J7-2	GND	DVM GND
J7-3	J11-3	EXT DVM TO A/D
J7-4	J14-16 J15-20	VERT FROM RNG SW
J7-5	P1-37,38	TRIG LVL
J7-6	J15-22	DVM FROM RNG SW
J7-7	J11-5	INT DVM TO A/D
J7-8	J17-10	RF INPUT PWR
J7-9		
J7-10	J14-19	VERT CHAR SYNC
J7-11		
J7-12	J2-20	TRIG PULSE
J7-13	J10-3,4 J11-13 J15-62	AF ADD BUS 0
J7-14	J2-11	SCOPE SWP CNTL 0
J7-15	J10-5,6 J11-15 J15-63	AF ADD BUS 1
J7-16	J2-9	SCOPE SWP CNTL 1

Table 5.1. System Motherboard Wirelist (Sheet 15 of 57)

FROM	TO	NAME
J7-17	J10-7,8 J11-17 J15-64	AF ADD BUS 2
J7-18	J2-7	SCOPE SWP CNTL 2
J7-19	J10-9,10 J11-19 J15-65	AF ADD BUS 3
J7-20	J2-19	SCOPE SWP CNTL 3
J7-21		
J7-22	J14-22	$\overline{\text{CHAR GEN RST}}$
J7-23		
J7-24		
J7-25		
J7-26		
J7-27	J8-17	SPECT ANA VERT
J7-28		
J7-29	J10-15,16 J11-29,30 J15-66	AF DATA BUS 3
J7-30		
J7-31	J10-17,18 J11-31,32 J15-67	AF DATA BUS 2
J7-32		
J7-33	J10-19,20 J11-33,34 J15-68	AF DATA BUS 1
J7-34		
J7-35	J10-21,22 J11-35,36 J15-70	AF DATA BUS 0
J7-36		
J7-37		
J7-38	J17-9	ANT EN
J7-39	J2-15	EXT HORIZ EN
J7-40	J2-10	HORIZ TIME BASE EN
J7-41		
J7-42		

Table 5.1. System Motherboard Wirelist (Sheet 16 of 57)

FROM	TO	NAME
J7-43		
J7-44	J14-44	$\overline{\text{LINE 1}}$
J7-45	+5V	+5V
J7-46	+5V	+5V
J7-47	−5V	−5V
J7-48	−5V	−5V
J7-49	+33V	+33V
J7-50	+33V	+33V
J7-51	+12V	+12V
J7-52	+12V	+12V
J7-53	−12V	−12V
J7-54	−12V	−12V
J7-55	J17-15	EXT FWD PWR
J7-56	J2-31,32 P1-15	+8V
J7-57	J17-17	EXT RFL PWR
J7-58	J2-29,30	−8V
J7-59	J17-21	CARRIER + MOD LVL
J7-60	J12-44 J13-44 J15-24	INT SCOPE TO RNG SW
J7-61	P1-17,18	DISPERSION SWP RTN
J7-62		
J7-63	P1-21,22	DISPERSION SWP
J7-64		
J7-65	P2-3	VOL CNTL AUDIO RTN
J7-66		
J7-67		
J7-68	J10-27,28 J14-18	$\overline{\text{AF BUS EN1}}$

Table 5.1. System Motherboard Wirelist (Sheet 17 of 57)

FROM	TO	NAME
J7-69	J10-49,50	MOD CAL AUDIO
J7-70		
J7-71		
J7-72	J2-12	INT SCOPE HORIZ
J7-73		
J7-74	J2-48	VERT TO SCOPE AMP
J7-75		
J7-76	J2-22	$\overline{\text{SYNC PRESENT}}$
J7-77		
J7-78	J8-19	SIG STRENGTH VOLTAGE
J7-79	J8-67 J12-19 J13-19	DEMOD CAL AUDIO
J7-80	P2-27	HDST AUDIO
J7-81	E6	SPKR AUDIO
J7-82	E6	SPKR AUDIO
J7-83	J14-20	HORIZ CHAR SYNC
J7-84	J2-14	SCOPE MODE EN
J7-85		
J7-86		
J7-87	J14-21	CHAR GEN Z-AXIS
J7-88	J2-13	SWP BLANKING
J7-89		
J7-90	J2-23	$\overline{\text{SCOPE Z-AXIS}}$
J7-91	J8-70	700 KHZ IF
J7-92	J8-72	GND
J7-93		
J7-94		

Table 5.1. System Motherboard Wirelist (Sheet 18 of 57)

FROM	TO	NAME
J7-95	J11-67	100 HZ REF
J7-96		
J7-97	E13 J4-9,10 J6-7,8,9,10,11,12,13,14	DC IN
J7-98		
J7-99	GND	GND
J7-100	GND	GND
RECEIVER MODULE		
J8-1	GND	GND
J8-2	GND	GND
J8-3		
J8-4		
J8-5		
J8-6		
J8-7		
J8-8		
J8-9		
J8-10		
J8-11	GND	
J8-12	GND	
J8-13	GND	
J8-14	GND	
J8-15	J9-17,18 J11-8	SYNTH 10 MHz
J8-16		
J8-17	J7-27	SPECT ANA VERT
J8-18		

Table 5.1. System Motherboard Wirelist (Sheet 19 of 57)

FROM	TO	NAME
J8-19	J7-78	SIG STRENGTH VOLTAGE
J8-20		
J8-21		
J8-22		
J8-23		
J8-24		
J8-25		
J8-26		
J8-27	P2-18	BFO FREQ CNTL
J8-28		
J8-29	P2-2	SQUELCH LEVEL
J8-30		
J8-31	+5V	+5V
J8-32	+5V	+5V
J8-33	−5V	−5V
J8-34	−5V	−5V
J8-35	+33V	N.C.
J8-36	+33V	N.C.
J8-37	+12V	+12V
J8-38	+12V	+12V
J8-39	−12V	−12V
J8-40	−12V	−12V
J8-41		
J8-42		
J8-43		
J8-44		

Table 5.1. System Motherboard Wirelist (Sheet 20 of 57)

FROM	TO	NAME
J8-45	J11-41,42	SYS CNTL DATA
J8-46		
J8-47	J9-3,4 J11-49 J17-6	DATA CL
J8-48		
J8-49	J9-5,6 J11-43,44 J17-7	DATA LATCH
J8-50		
J8-51		
J8-52		
J8-53		
J8-54		
J8-55	J9-11,12	SYNTH CNTL DATA
J8-56		
J8-57	J15-38	WB SIG PRES
J8-58	J15-30	$\overline{\text{IF OVERLOAD}}$
J8-59	J15-32	SIGNAL PRESENT
J8-60	P2-17	SIG PRES LED
J8-61		
J8-62	J10-47,48 J12-22 J13-22 P2-4	VOL CNTL AUDIO
J8-63		
J8-64	R2-2	DEMOD OUT
J8-65	J11-65	IF/BFO FREQ
J8-66		
J8-67	J1-79 J12-19 J13-19	DEMOD CAL AUDIO
J8-68		
J8-69		
J8-70	J7-91	700 KHZ IF

Table 5.1. System Motherboard Wirelist (Sheet 21 of 57)

FROM	TO	NAME
J8-71	GND	GND
J8-72	GND J7-92	GND
RF SYNTHESIZER MODULE		
J9-1	GND	GND
J9-2	GND	GND
J9-3	J8-47 J11-49 J17-6	DATA CL
J9-4	J8-47 J11-49 J17-6	DATA CL
J9-5	J8-49 J11-43,44 J17-7	DATA LATCH
J9-6	J8-49 J11-43,44 J17-7	DATA LATCH
J9-7	J11-37,38	24 CNTL DATA
J9-8	J11-37,38	24 CNTL DATA
J9-9	J11-39,40	60.5 CNTL DATA
J9-10	J11-39,40	60.5 CNTL DATA
J9-11	J8-55	SYNTH CNTL DATA
J9-12	J8-55	SYNTH CNTL DATA
J9-13	J11-57	310-440 CNTL DATA
J9-14	J11-57	310-44 CNTL DATA
J9-15	J17-16	WB AMP LO/HI
J9-16	J17-16	WB AMP LO/HI
J9-17	J11-8 J8-15	SYNTH 10 MHZ
J9-18	J11-8 J8-15	SYNTH 10 MHZ
J9-19	GND	GND
J9-20	GND	GND
J9-21	GND	GND
J9-22	GND	GND

Table 5.1. System Motherboard Wirelist (Sheet 22 of 57)

FROM	TO	NAME
J9-23	GND	GND
J9-24	GND	GND
J9-25	P1-19,20	SYNTH SWEEP
J9-26	P1-19,20	SYNTH SWEEP
J9-27	GND	GND
J9-28	GND	GND
J9-29	J10-55,56	SYNTH FM
J9-30	J10-55,56	SYNTH FM
J9-31	GND	GND
J9-32	GBD	GND
J9-33	J17-13	0.01-1 AGC
J9-34	J17-13	0.01-1 AGC
J9-35	GND	GND
J9-36	GND	GND
J9-37	GND	GND
J9-38	GND	GND
J9-39	E15	10 MHZ REF
J9-40	E15	10 MHZ REF
J9-41	GND	GND
J9-42	GND	GND
J9-43	+5V	+5V
J9-44	+5V	+5V
J9-45	J3-18	−5V TO SYNTH
J9-46	J3-18	−5V TO SYNTH
J9-47	+33V	+33V
J9-48	+33V	+33V

Table 5.1. System Motherboard Wirelist (Sheet 23 of 57)

FROM	TO	NAME
J9-49	+12V	+12V
J9-50	+12V	+12V
J9-51	−12V	−12V
J9-52	−12V	−12V
J9-53	GND	GND
J9-54	GND	GND
J9-55	GND	GND
J9-56	GND	GND
J9-57	GND	GND
J9-58	GND	GND
J9-59	GND	GND
J9-60	GND	GND
J9-61	GND	GND
J9-62	GND	GND
J9-63	GND	GND
J9-64	GND	GND
J9-65	GND	GND
J9-66	GND	GND
J9-67	GND	GND
J9-68	GND	GND
J9-69	GND	GND
J9-70	GND	GND
J9-71	GND	GND
J9-72	GND	GND

Table 5.1. System Motherboard Wirelist (Sheet 24 of 57)

FROM	TO	NAME
AUDIO SYNTHESIZER MODULE		
J10-1	GND	GND
J10-2	GND	GND
J10-3	J7-13 J11-13 J15-62	AF ADD BUS 0
J10-4	J7-13 J11-13 J15-62	AF ADD BUS 0
J10-5	J7-15 J11-15 J15-63	AF ADD BUS 1
J10-6	J7-15 J11-15 J15-63	AF ADD BUS 1
J10-7	J7-17 J11-17 J15-64	AF ADD BUS 2
J10-8	J7-17 J11-17 J15-64	AF ADD BUS 2
J10-9	J7-19 J11-19 J15-65	AF ADD BUS 3
J10-10	J7-19 J11-19 J15-65	AF ADD BUS 3
J10-11	J12-13 J13-13, P2-29	MIC IN
J10-12	J12-13 J13-13, P2-29	MIC IN
J10-13	E1 J12-15 J13-15 J14-31	EXT MOD IN
J10-14	E1 J12-15 J13-15 J14-31	EXT MOD IN
J10-15	J7-29 J11-29,30 J15-66	AF DATA BUS 3
J10-16	J7-29 J11-29,30 J15-66	AF DATA BUS 3
J10-17	J7-31 J11-31,32 J15-67	AF DATA BUS 2
J10-18	J7-31 J11-31,32 J15-67	AF DATA BUS 2
J10-19	J7-33 J11-33,34 J15-68	AF DATA BUS 1
J10-20	J7-33 J11-33,34 J15-68	AF DATA BUS 1
J10-21	J7-35 J11-35,36 J15-70	AF DATA BUS 0
J10-22	J7-35 J11-35,36 J15-70	AF DATA BUS 0
J10-23	J12-34 J13-34 P2-58	EXT MOD (I)
J10-24	J12-34 J13-34 P2-58	EXT MOD (I)
J10-25	J12-40 J13-40 P2-47,48	INT MOD (I)

Table 5.1. System Motherboard Wirelist (Sheet 25 of 57)

FROM	TO	NAME
J10-26	J12-40 J13-40 P2-47,48	INT MOD (I)
J10-27	J7-68 J14-18	$\overline{\text{AF BUS EN 1}}$
J10-28	J7-68 J14-18	$\overline{\text{AF BUS EN 1}}$
J10-29	J14-29	BINARY MOD
J10-30		
J10-31	+5V	+5V
J10-32	+5V	+5V
J10-33	−5V	−5V
J10-34	−5V	−5V
J10-35	+33V	+33V
J10-36	+33V	+33V
J10-37	+12V	+12V
J10-38	+12V	+12V
J10-39	−12V	−12V
J10-40	−12V	−12V
J10-41	J11-11	SYNTH 1 KHZ
J10-42	J11-11	SYNTH 1 KHZ
J10-43	R1-2	FP MOD OUT
J10-44	R1-2	FP MOD OUT
J10-45	J12-28 J13-28 P2-55	1 KHZ SINE (I)
J10-46	J12-28 J13-28 P2-55	1 KHZ SINE (I)
J10-47	J8-62 J12-22 J13-22 P2-4	VOL CNTL AUDIO
J10-48	J8-62 J12-22 J13-22 P2-4	VOL CNTL AUDIO
J10-49	J7-69	MOD CAL AUDIO
J10-50	J7-69	MOD CAL AUDIO
J10-51	J17-19	DSBSC MOD

Table 5.1. System Motherboard Wirelist (Sheet 26 of 57)

FROM	TO	NAME
J10-52	J17-19	DSBSC MOD
J10-53		
J10-54		
J10-55	J9-29,30	SYNTH FM
J10-56	J9-29,30	SYNTH FM
J10-57		
J10-58		
J10-59	J17-18	OFFSET MOD
J10-60	J17-18	OFFSET MOD
J10-61	P1-8 J12-6 J13-6	5 VDC + AM MOD
J10-62	P1-8 J12-6 J13-6	5 VDC + AM MOD
J10-63	J12-43 J13-43	INT MOD RTN
J10-64	J12-43 J13-43	INT MOD RTN
J10-65	J12-37 J13-37	EXT MOD RTN
J10-66	J12-37 J13-37	EXT MOD RTN
J10-67	J12-31 J13-31	1 KHZ SINE RTN
J10-68	J12-31 J13-31	1 KHZ SINE RTN
J10-69		
J10-70		
J10-71	GND	GND
J10-72	GND	GND
PROCESSOR INTERFACE MODULE		
J11-1	GND	GND
J11-2	GND	GND

Table 5.1. System Motherboard Wirelist (Sheet 27 of 57)

FROM	TO	NAME
J11-3	J7-3	EXT DVM TO A/D
J11-4	J7-1,2	DVM GND
J11-5	J7-7	INT DVM TO A/D
J11-6		
J11-7		
J11-8	J9-17,18 J8-15	SYNTH 10 MHZ
J11-9		
J11-10		
J11-11	J10-41,42	SYNTH 1 KHZ
J11-12	GND	GND
J11-13	J7-13 J10-3,4 J15-62	AF ADD BUS 0
J11-14		
J11-15	J7-15 J10-5,6 J15-63	AF ADD BUS 1
J11-16	GND	GND
J11-17	J7-17 J10-7,8 J15-64	AF ADD BUS 2
J11-18		
J11-19	J7-19 J10-9,10 J15-65	AF ADD BUS 3
J11-20		
J11-21		
J11-22		
J11-23		
J11-24		
J11-25		
J11-26		
J11-27		

Table 5.1. System Motherboard Wirelist (Sheet 28 of 57)

FROM	TO	NAME
J11-28		
J11-29	J7-29 J10-15,16 J15-66	AF DATA BUS 3
J11-30	J7-29 J10-15,16 J15-66	AF DATA BUS 3
J11-31	J7-31 J10-17,18 J15-67	AF DATA BUS 2
J11-32	J7-31 J10-17,18 J15-67	AF DATA BUS 2
J11-33	J7-33 J10-19,20 J15-68	AF DATA BUS 1
J11-34	J7-33 J10-19,20 J15-68	AF DATA BUS 1
J11-35	J7-35 J10-21,22 J15-70	AF DATA BUS 0
J11-36	J7-35 J10-21,22 J15-70	AF DATA BUS 0
J11-37	J9-7,8	24 CNTL DATA
J11-38	J9-7,8	24 CNTL DATA
J11-39	J9-9,10	60.5 CNTL DATA
J11-40	J9-9,10	60.5 CNTL DATA
J11-41	J8-45	SYS CNTL DATA
J11-42	J8-45	SYS CNTL DATA
J11-43	J8-49 J9-5,6 J17-7	DATA LATCH
J11-44	J8-49 J9-5,6 J17-7	DATA LATCH
J11-45	+5V	+5V
J11-46	+5V	+5V
J11-47	−5V	−5V
J11-48	−5V	−5V
J11-49	J8-47 J9-3,4 J17-6	DATA CL
J11-50		PA 0
J11-51	+12V	+12V
J11-52	+12V	+12V

Table 5.1. System Motherboard Wirelist (Sheet 29 of 57)

FROM	TO	NAME
J11-53	−12V	−12V
J11-54	−12V	−12V
J11-55		
J11-56	J17-8	OFFSET DATA
J11-57	J9-13,14	310-440 CNTL DATA
J11-58	J12 J13 J14-58	$\overline{\text{NMI}}$
J11-59		
J11-60	J12-55 J13-55	INT FREQ CNTR
J11-61	J15-34	EXT FREQ CNTR
J11-62		
J11-63	J15-36	$\overline{\text{EXT FREQ CNTR}}$
J11-64		
J11-65	J8-65	IF/BFO FREQ
J11-66		
J11-67	J7-95	100 HZ REF
J11-68	J15-69	$\overline{\text{AF BUS EN2}}$
J11-69	J12 J13 J14-69	$\overline{\text{RESET}}$
J11-70	−70	$\overline{\text{IRQ}}$
J11-71	−71	A1
J11-72	−72	A0
J11-73	−73	A3
J11-74	−74	A2
J11-75	−75	A5
J11-76	−76	A4
J11-77	J12 J13 J14-77	A7

Table 5.1. System Motherboard Wirelist (Sheet 30 of 57)

FROM	TO	NAME
J11-78	J12 J13 J14-78	A6
J11-79	−79	A9
J11-80	−80	A8
J11-81	−81	A11
J11-82	−82	A10
J11-83	−83	A13
J11-84	−84	A12
J11-85	−85	A15
J11-86	−86	A14
J11-87	−87	$\overline{\text{I/O EN}}$
J11-88	−88	E
J11-89	−89	Q
J11-90	−90	R/W
J11-91	−91	D1
J11-92	−92	D0
J11-93	−93	D3
J11-94	−94	D2
J11-95	−95	D5
J11-96	−96	D4
J11-97	−97	D7
J11-98	J12 J13 J14-98	D6
J11-99	GND	GND
J11-100	GND	GND

Table 5.1. System Motherboard Wirelist (Sheet 31 of 57)

FROM	TO	NAME
J12-1	GND	GND
J12-2	GND	GND
J12-3	J13-3 P1-9	AM MOD + DC REF (I)
J12-4	J13-4 J17-14	AM MOD + DC REF (O)
J12-5	J14-4	OPT A ENABLE
J12-6	J10-61,62 J13-6 P1-8	5 VDC + AM MOD
J12-7	–	RESERVED FOR SECURE COM
J12-8		
J12-9	–	RESERVED FOR SECURE COM
J12-10	–	RESERVED FOR SECURE COM
J12-11	–	RESERVED FOR SECURE COM
J12-12		
J12-13	J10-11,12 J13-13 P2-29	MIC INPUT
J12-14	–	RESERVED FOR SECURE COM
J12-15	E1 J10-13,14 J13-15 J14-31	EXT MOD INPUT
J12-16		
J12-17	–	RESERVED FOR SECURE COM
J12-18		
J12-19	J7-79 J8-67 J13-19	DEMOD CAL AUDIO
J12-20	J3-9, J4-24, J13-20, J15-94	$\overline{\text{PWR ON}}$
J12-21		
J12-22	J8-62 J10-47,48 J13-22 P2-4	VOL CNTL AUDIO
J12-23	J13-23, J14-23	$\overline{\text{ROM-P7}}$
J12-24	J13-24, J14-24	$\overline{\text{ROM-P6}}$

Table 5.1. System Motherboard Wirelist (Sheet 32 of 57)

FROM	TO	NAME
J12-25	–	RESERVED FOR SECURE COM
J12-26	J13-26 J14-26	$\overline{\text{ROM-P10}}$
J12-27	–	RESERVED FOR SECURE COM
J12-28	J10-45,46 J13-28 P2-55	1 KHZ SINE (I)
J12-29	J13-29 P2-53,54	1 KHZ SINE RTN (I)
J12-30	J13-30	1 KHZ SINE RTN (O)
J12-31	J10-67,68 J13-31	1 KHZ SINE RTN
J12-32	J13-32, J14-32	$\overline{\text{ROM-P5}}$
J12-33	J13-33, J14-33	$\overline{\text{ROM-P8}}$
J12-34	J10-23,24 J13-34 P2-58	EXT MOD (I)
J12-35	J13-35 P2-56	EXT MOD RTN (I)
J12-36	J13-36	EXT MOD RTN (O)
J12-37	J10-65,66 J13-37	EXT MOD RTN
J12-38		
J12-39		
J12-40	J10-25,26 J13-40 P2-47,48	INT MOD (I)
J12-41	J13-41 P2-49,50	INT MOD RTN (I)
J12-42	J13-42	INT MOD RTN (O)
J12-43	J10-63,64 J13-43	INT MOD RTN
J12-44	J7-60 J13-44 J15-24	INT SCOPE TO RNG SW
J12-45	+5V	+5V
J12-46	+5V	+5V
J12-47	−5V	−5V
J12-48	−5V	−5V
J12-49	+33V	+33V

Table 5.1. System Motherboard Wirelist (Sheet 33 of 57)

FROM	TO	NAME
J12-50	+33V	+33V
J12-51	+12V	+12V
J12-52	+12V	+12V
J12-53	−12V	−12V
J12-54	−12V	−12V
J12-55	J11-60 J13-55	INT FREQ CNTR
J12-56	+5V	V_{pp}
J12-57	+5V	$\overline{PGM}$
J12-58	J11,J13, J14-58	$\overline{NMI}$
J12-59	J13 J14-59	$\overline{ROM\text{-}P3}$
J12-60	−60	$\overline{ROM\text{-}P1}$
J12-61	−61	$\overline{ROM\text{-}P0}$
J12-62	−62	$\overline{ROM\text{-}P14}$
J12-63	−63	$\overline{ROM\text{-}P13}$
J12-64	−64 J15-39	$\overline{FIRQ}$
J12-65	−65	$\overline{ROM\text{-}P12}$
J12-66	J13-66 J14-66	$\overline{XRAM}$
J12-67	J13 J14-67	$\overline{ROM\text{-}P11}$
J12-68	−68	$\overline{ROM\text{-}P9}$
J12-69	J11 J13 J14-69	$\overline{RESET}$
J12-70	−70	$\overline{IRQ}$
J12-71	−71	A1
J12-72	−72	A0
J12-73	−73	A3
J12-74	J11 J13 J14-74	A2

Table 5.1. System Motherboard Wirelist (Sheet 34 of 57)

FROM	TO	NAME
J12-75	J11 J13 J14-75	A5
J12-76	−76	A4
J12-77	−77	A7
J12-78	−78	A6
J12-79	−79	A9
J12-80	−80	A8
J12-81	−81	A11
J12-82	−82	A10
J12-83	−83	A13
J12-84	−84	A12
J12-85	−85	A15
J12-86	−86	A14
J12-87	−87	$\overline{\text{I/O EN}}$
J12-88	−88	E
J12-89	−89	Q
J12-90	−90	R/$\overline{\text{W}}$
J12-91	−91	D1
J12-92	−92	D0
J12-93	−93	D3
J12-94	−94	D2
J12-95	−95	D5
J12-96	−96	D4
J12-97	−97	D7
J12-98	J11 J13 J14-98	D6

Table 5.1. System Motherboard Wirelist (Sheet 35 of 57)

FROM	TO	NAME
J12-99	GND	GND
J12-100	GND	GND
OPTION B MODULE		
J13-1	GND	GND
J13-2	GND	GND
J13-3	J12-3 P1-9	AM MOD + DC REF (I)
J13-4	J12-4 J17-14	AM MOD + DC REF (O)
J13-5	J14-12	OPT B ENABLE
J13-6	J10-61,62 J12-6 P1-8	5 VDC + AM MOD
J13-7	–	RESERVED FOR SECURE COM
J13-8		
J13-9	–	RESERVED FOR SECURE COM
J13-10	–	RESERVED FOR SECURE COM
J13-11	–	RESERVERED FOR SECURE COM
J13-12		
J13-13	J10-11,12 J12-13 P2-29	MIC INPUT
J13-14	–	RESERVED FOR SECURE COM
J13-15	E1 J10-13,14 J12-15, J14-31	EXT MOD INPUT
J13-16		
J13-17	–	RESERVED FOR SECURE COM
J13-18		
J13-19	J7-79 J8-67 J12-19	DEMOD CAL AUDIO
J13-20	J3-9, J4-24, J12-20, J15-94	$\overline{\text{PWR ON}}$
J13-21		

Table 5.1. System Motherboard Wirelist (Sheet 36 of 57)

FROM	TO	NAME
J13-22	J8-62 J10-47,48 J12-22 P2-4	VOL CNTL AUDIO
J13-23	J12-23, J14-23	$\overline{\text{ROM-P7}}$
J13-24	J12-24, J14-24	$\overline{\text{ROM-P6}}$
J13-25	–	RESERVED FOR SECURE COM
J13-26	J12-26 J14-26	$\overline{\text{ROM-P10}}$
J13-27	–	RESERVED FOR SECURE COM
J13-28	J10-45,46 J12-28 P2-55	1 KHZ SINE (I)
J13-29	J12-29 P2-53,54	1 KHZ SINE RTN (I)
J13-30	J12-30	1 KHZ SINE RTN (O)
J13-31	J10-67,68 J12-31	1 KHZ SINE RTN
J13-32	J12-32, J14-32	$\overline{\text{ROM-P5}}$
J13-33	J12-33, J14-33	$\overline{\text{ROM-P8}}$
J13-34	J10-23,24 J12-34 P2-58	EXT MOD (I)
J13-35	J12-35 P2-56	EXT MOD RTN (I)
J13-36	J12-36	EXT MOD RTN (O)
J13-37	J10-65,66 J12-37	EXT MOD RTN
J13-38		
J13-39		
J13-40	J10-25,26 J12-40 P2-47,48	INT MOD (I)
J13-41	J12-41 P2-49,50	INT MOD RTN (I)
J13-42	J12-42	INT MOD RTN (O)
J13-43	J10-63,64 J12-43	INT MOD RTN
J13-44	J7-60 J12-44 J15-24	INT SCOPE TO RNG SW
J13-45	+5V	+5V
J13-46	+5V	+5V

Table 5.1. System Motherboard Wirelist (Sheet 37 of 57)

FROM	TO	NAME
J13-47	−5V	−5V
J13-48	−5V	−5V
J13-49	+33V	+33V
J13-50	+33V	+33V
J13-51	+12V	+12V
J13-52	+12V	+12V
J13-53	−12V	−12V
J13-54	−12V	−12V
J13-55	J11-60 J12-55	INT FREQ CNTR
J13-56	+5V	V_{pp}
J13-57	+5V	$\overline{PGM}$
J13-58	J11 J12 J14-58	$\overline{NMI}$
J13-59	J12 J14-59	$\overline{ROM\text{-}P3}$
J13-60	−60	$\overline{ROM\text{-}P1}$
J13-61	−61	$\overline{ROM\text{-}P0}$
J13-62	−62	$\overline{ROM\text{-}P14}$
J13-63	−63	$\overline{ROM\text{-}P13}$
J13-64	−64 J15-39	$\overline{FIRQ}$
J13-65	−65	$\overline{ROM\text{-}P12}$
J13-66	J12-66 J14-66	$\overline{XRAM}$
J13-67	−67	$\overline{ROM\text{-}P11}$
J13-68	−68	$\overline{ROM\text{-}P9}$
J13-69	J11 J12 J14-69	$\overline{RESET}$
J13-70	J11 J12 J14-70	$\overline{IRQ}$

Table 5.1. System Motherboard Wirelist (Sheet 38 of 57)

FROM	TO	NAME
J13-71	J11 J12 J14-71	A1
J13-72	−72	A0
J13-73	−73	A3
J13-74	−74	A2
J13-75	−75	A5
J13-76	−76	A4
J13-77	−77	A7
J13-78	−78	A6
J13-79	−79	A9
J13-80	−80	A8
J13-81	−81	A11
J13-82	−82	A10
J13-83	−83	A13
J13-84	−84	A12
J13-85	−85	A15
J13-86	−86	A14
J13-87	−87	$\overline{\text{I/O EN}}$
J13-88	−88	E
J13-89	−89	Q
J13-90	−90	R/$\overline{\text{W}}$
J13-91	−91	D1
J13-92	−92	D0
J13-93	−93	D3
J13-94	−94	D2
J13-95	J11 J12 J14-95	D5

Table 5.1. System Motherboard Wirelist (Sheet 39 of 57)

FROM	TO	NAME
J13-96	J11 J12 J14-96	D4
J13-97	−97	D7
J13-98	−98	D6
J13-99	GND	GND
J13-100	GND	GND
PROCESSOR MODULE		
J14-1	GND	GND
J14-2	GND	GND
J14-3	J15-84	COLUMN 0
J14-4	J15-83	COLUMN 1
J14-5	J15-89	COLUMN 2
J14-6	J15-88	COLUMN 3
J14-7	J15-92	ROW 0
J14-8	J15-85	ROW 1
J14-9	J15-86	ROW 2
J14-10	J15-87	ROW 3
J14-11		CB2
J14-12	J13-5	OPT B DET
J14-13	J15-90	KEY ROW 4
J14-14	J12-5	OPT A DET
J14-15	J15-40	OPTO CCW
J14-16	J7-4, J15-20	VERT FROM RNG SW
J14-17		$\overline{\text{ROM-P15}}$
J14-18	J7-68 J10-27,28	$\overline{\text{AF BUS EN I}}$

Table 5.1. System Motherboard Wirelist (Sheet 40 of 57)

FROM	TO	NAME
J14-19	J7-10	VERT CHAR SYNC
J14-20	J7-83	HORIZ CHAR SYNC
J14-21	J7-87	CHAR GEN Z-AXIS
J14-22	J7-22	$\overline{\text{CHAR GEN RST}}$
J14-23	J12-23, J13-23	$\overline{\text{ROM-P7}}$
J14-24	J12-24, J13-24	$\overline{\text{ROM-P6}}$
J14-25		
J14-26	J12-26 J13-26	$\overline{\text{ROM-P10}}$
J14-27		CB1
J14-28		CA2
J14-29	J10-29	BINARY MOD
J14-30		
J14-31	E1, J10-13,14 J12-15, J13-15	EXT MOD INPUT
J14-32	J12-32, J13-32	$\overline{\text{ROM-P5}}$
J14-33	J12-33, J13-33	$\overline{\text{ROM-P8}}$
J14-34		
J14-35		
J14-36		
J14-37		
J14-38		
J14-39		
J14-40		
J14-41		
J14-42		
J14-43		

Table 5.1. System Motherboard Wirelist (Sheet 41 of 57)

FROM	TO	NAME
J14-44	J7-44	$\overline{\text{LINE 1}}$
J14-45	+5V	+5V
J14-46	+5V	+5V
J14-47	−5V	−5V
J14-48	−5V	−5V
J14-49		
J14-50		
J14-51		
J14-52		
J14-53		
J14-54		
J14-55	+5V	$\overline{\text{CL CTL}}$
J14-56	+5V	V_{pp}
J14-57	+5V	$\overline{\text{PGM}}$
J14-58	J11, J12, J13-58	$\overline{\text{NMI}}$
J14-59	J12 J13-59	$\overline{\text{ROM-P3}}$
J14-60	−60	$\overline{\text{ROM-P1}}$
J14-61	−61	$\overline{\text{ROM-P0}}$
J14-62	−62	$\overline{\text{ROM-P14}}$
J14-63	−63	$\overline{\text{ROM-P13}}$
J14-64	J15-39 J12-64 J13-64	$\overline{\text{FIRQ}}$
J14-65	J12 J13-65	$\overline{\text{ROM-P12}}$
J14-66	J12-66 J13-66	$\overline{\text{XRAM}}$
J14-67	J12 J13-67	$\overline{\text{ROM-P11}}$
J14-68	J12 J13-68	$\overline{\text{ROM-P9}}$

Table 5.1. System Motherboard Wirelist (Sheet 42 of 57)

FROM	TO	NAME
J14-69	J11 J12 J13-69	$\overline{\text{RESET}}$
J14-70	−70	$\overline{\text{IRQ}}$
J14-71	−71	A1
J14-72	−72	A0
J14-73	−73	A3
J14-74	−74	A2
J14-75	−75	A5
J14-76	−76	A4
J14-77	−77	A7
J14-78	−78	A6
J14-79	−79	A9
J14-80	−80	A8
J14-81	−81	A11
J14-82	−82	A10
J14-83	−83	A13
J14-84	−84	A12
J14-85	−85	A15
J14-86	−86	A14
J14-87	−87	$\overline{\text{I/O EN}}$
J14-88	−88	E
J14-89	−89	Q
J14-90	−90	R/W
J14-91	−91	D1
J14-92	−92	D0
J14-93	J11-93, J12-93, J13-93	D3

Table 5.1. System Motherboard Wirelist (Sheet 43 of 57)

FROM	TO	NAME
J14-94	J11 J12 J13-94	D2
J14-95	−95	D5
J14-96	−96	D4
J14-97	−97	D7
J14-98	−98	D6
J14-99	GND	GND
J14-100	GND	GND
FRONT PANEL INTERFACE MODULE		
J15-1	E8	EXT INPUT
J15-2	GND	GND
J15-3		
J15-4	P1-39,40	VERT POS
J15-5	P1-41,42	VERT GAIN
J15-6	P1-43,44	VERT GAIN RTN
J15-7	J18-7	RF ATTEN 130 DB
J15-8	J18-8	RF ATTEN 120 DB
J15-9	J18-6	RF ATTEN 110 DB
J15-10	J18-9	RF ATTEN 100 DB
J15-11	J18-5	RF ATTEN 90 DB
J15-12	J18-10	RF ATTEN 80 DB
J15-13	J18-4	RF ATTEN 70 DB
J15-14	J18-11	RF ATTEN 60 DB
J15-15	J18-3	RF ATTEN 50 DB
J15-16	J18-12	RF ATTEN 40 DB

Table 5.1. System Motherboard Wirelist (Sheet 44 of 57)

FROM	TO	NAME
J15-17	J18-2	RF ATTEN 30 DB
J15-18	J18-13	RF ATTEN 20 DB
J15-19	J18-1	RF ATTEN 10 DB
J15-20	J7-4 J14-16	VERT FROM RNG SW
J15-21	J18-14	RF ATTEN 0 DB
J15-22	J7-6	DVM FROM RNG SW
J15-23		
J15-24	J7-60 J12, J13-44	INT SCOPE TO RNG
J15-25	P1-49,50	10V/DIV RNG SEL
J15-26	P1-51,52	1V/DIV RNG SEL
J15-27	P1-53,54	0.1V/DIV RNG SEL
J15-28	P1-57,58	0.01V/DIV RNG SEL
J15-29	J17-4	OFFSET ON/OFF
J15-30	J8-58	$\overline{\text{IF OVERLOAD}}$
J15-31	P2-5	WB/NB
J15-32	J8-59	SIGNAL PRESENT
J15-33	P1-5	$\overline{\text{ANT SEL}}$
J15-34	J11-61	EXT FREQ CNTR
J15-35		SPARE BIT
J15-36	J11-63	$\overline{\text{EXT FREQ CNTR}}$
J15-37	J17-20	RF OVER TEMP
J15-38	J8-57	WB SIGN PRES
J15-39	J14-64 J13-64, J12-64	$\overline{\text{FIRQ}}$
J15-40	J14-15	OPTO CCW
J15-41		

Table 5.1. System Motherboard Wirelist (Sheet 45 of 57)

FROM	TO	NAME
J15-42	P1-47	OPTICAL ENC B
J15-43		
J15-44	P1-45	OPTICAL ENC A
J15-45	+5V	+5V
J15-46	+5V	+5V
J15-47		
J15-48		
J15-49	P1-59,60	HORIZ INPUT
J15-50	J2-17	HORIZ TO SCOPE AMP
J15-51	+12V	+12V
J15-52	+12V	+12V
J15-53	−12V	−12V
J15-54	−12V	−12V
J15-55	P2-7	EXT HORIZ SEL
J15-56	P2-8	100 MS/DIV SWP SEL
J15-57	P2-9	10 MS/DIV SWP SEL
J15-58	P2-10	1 MS/DIV SWP SEL
J15-59	P2-11	100 µS/DIV SWP SEL
J15-60	P2-12	10 µS/DIV SWP SEL
J15-61	P2-13	1 µS/DIV SWP SEL
J15-62	J7-13 J10-3,4 J11-13	AF ADD BUS 0
J15-63	J7-15 J10-5,6 J11-15	AF ADD BUS 1
J15-64	J7-17 J10-7,8 J11-17	AF ADD BUS 2
J15-65	J7-19 J10-9,10 J11-19	AF ADD BUS 3
J15-66	J7-29 J10-15,16 J11-29,30	AF DATA BUS 3

Table 5.1. System Motherboard Wirelist (Sheet 46 of 57)

FROM	TO	NAME
J15-67	J7-31 J10-17,18 J11-31,32	AF DATA BUS 2
J15-68	J7-33 J10-19,20 J11-33,34	AF DATA BUS 1
J15-69	J11-68	$\overline{\text{AF BUS EN 2}}$
J15-70	J7-35 J10-21,22 J11-35,36	AF DATA BUS 0
J15-71		+8V OUT
J15-72		−8V OUT
J15-73	P2-23	IMAGE HI/LO
J15-74		ATTN X 0.01
J15-75		ATTN X 0.001
J15-76	J17-5	OFFSET ATTEN EN
J15-77		DC SELECT
J15-78	J17-22	MON + DSB/GEN
J15-79		ATTN X 0.1
J15-80		EXT INPUT SEL
J15-81	P2-21	MON/GEN
J15-82		ATTN X 1.0
J15-83	J14-4	COLUMN 1
J15-84	J14-3	COLUMN 0
J15-85	J14-8	ROW 1
J15-86	J14-9	ROW 2
J15-87	J14-10	ROW 3
J15-88	J14-6	COLUMN 3
J15-89	J14-5	COLUMN 2
J15-90	J14-13	KEY ROW 4
J15-91	J4-23	$\overline{\text{PWR OFF}}$

Table 5.1. System Motherboard Wirelist (Sheet 47 of 57)

FROM	TO	NAME
J15-92	J14-7	ROW 0
J15-93	J16-6	OVEN LED CATH
J15-94	J4-24 J3-9 J12-20 J13-20	$\overline{\text{PWR ON}}$
J15-95	GND	DC LED CATH
J15-96	J16-5	OVEN LED ANODE
J15-97	J4-25	AC LED
J15-98	J4-37	DC LED
J15-99	GND	GND
J15-100	GND	GND
FREQUENCY STANDARD MODULE		
J16-1	J3-15,16 J4-34,36	FREQ STD SUPPLY
J16-2	GND	GND
J16-3		
J16-4		
J16-5	J15-96	OVEN LED ANODE
J16-6	J15-93	OVEN LED CATHODE
J16-7	NC	
J16-8	+12V	+12V
RF INPUT/OUTPUT MODULE		
J17-1	+5V	+5V
J17-2	−5V	−5V
J17-3	+33V	+33V
J17-4	J15-29	OFFSET ON/OFF
J17-5	J15-76	OFFSET ATTEN EN

Table 5.1. System Motherboard Wirelist (Sheet 48 of 57)

FROM	TO	NAME
J17-6	J8-47 J9-3,4 J11-49	DATA CL
J17-7	J8-49 J9-5,6 J11-43,44	DATA LATCH
J17-8	J11-56	OFFSET DATA
J17-9	J7-38	ANT EN
J17-10	J7-8	RF INPUT PWR
J17-11	GND	GND
J17-12	GND	GND
J17-13	J9-33,34	.01-1 AGC
J17-14	J12-4 J13-4	AM MOD + DC REF (0)
J17-15	J7-55	EXT FWD PWR
J17-16	J9-15,16	WB AMP LO/HI
J17-17	J7-57	EXT RFL PWR
J17-18	J10-59,60	OFFSET MOD
J17-19	J10-51,52	DSBSC MOD
J17-20	J15-37	RF OVER TEMP
J17-21	J7-59	CARRIER + MOD LVL
J17-22	J15-78	MON + DSB/GEN
J17-23	+12V	+12V
J17-24	−12V	−12V
J17-25		
J17-26		
J17-27		
J17-28		
J17-29		

Table 5.1. System Motherboard Wirelist (Sheet 49 of 57)

FROM	TO	NAME
J17-30		
J17-31		
J17-32		
J17-33		
J17-34		
J17-35		
J17-36		
J17-37		
J17-38		
J17-39	GND	
J17-40		
J17-41		
J17-42		
J17-43		
J17-44		
J17-45		
J17-46		
J17-47		
48		
J17-49		
J17-50		
J18-1	J15-19	RF ATTEN 10 DB
J18-2	J15-17	RF ATTEN 30 DB
J18-3	J15-15	RF ATTEN 50 DB
J18-4	J15-13	RF ATTEN 70 DB
J18-5	J13-11	RF ATTEN 90 DB

Table 5.1. System Motherboard Wirelist (Sheet 50 of 57)

FROM	TO	NAME
J18-6	J15-9	RF ATTEN 110 DB
J18-7	J15-7	RF ATTEN 130 DB
J18-8	J15-8	RF ATTEN 120 DB
J18-9	J15-10	RF ATTEN 100 DB
J18-10	J15-12	RF ATTEN 80 DB
J18-11	J15-14	RF ATTEN 60 DB
J18-12	J15-16	RF ATTEN 40 DB
J18-13	J15-18	RF ATTEN 20 DB
J18-14	J15-21	RF ATTEN 0 DB
J18-15		
J18-16		
FAN		
J19-1	+12V	FAN HI
J19-2	GND	FAN LO
ROTATION COIL		
J20-1	GND	GND
J20-2	J2-50	TRACE ROTATION
FRONT PANEL		
P1-1	+33V	+33V
P1-2		
P1-3	GND	GND
P1-4		
P1-5	J15-33	$\overline{\text{ANT SEL}}$
P1-6		
P1-7	GND	GND

Table 5.1. System Motherboard Wirelist (Sheet 51 of 57)

FROM	TO	NAME
P1-8	J10-61,62 J12-6 J13-6	5 VDC + AM MOD
P1-9	J12-3 J13-3	AM MOD + DC REF (I)
P1-10	J2-59	FOCUS LVL
P1-11	J2-43	INTENSITY LVL
P1-12	−5V	−5V
P1-13	+5V	+5V
P1-14		
P1-15	J2-31,32 J7-56	+8V
P1-16	J2-53	SWP VERNIER VOLT
P1-17	J7-61	DISPERSION SWP RTN
P1-18	J7-61	DISPERSION SWP RTN
P1-19	J9-25,26	SYNTH SWP
P1-20	J9-25,26	SYNTH SWP
P1-21	J7-63	DISPERSION SWP
P1-22	J7-63	DISPERSION SWP
P1-23	−5V	−5V
P1-24	−5V	−5V
P1-25	J2-45	HORIZ POS
P1-26	J2-45	HORIZ POS
P1-27		
P1-28		
P1-29	+5V	+5V
P1-30	+5V	+5V
P1-31	GND	GND
P1-32	GND	GND

Table 5.1. System Motherboard Wirelist (Sheet 52 of 57)

FROM	TO	NAME
P1-33		
P1-34	J2-24	AUTO/NOR TRIG
P1-35	−5V	−5V
P1-36	−5V	−5V
P1-37	J7-5	TRIG LVL
P1-38	J7-5	TRIG LVL
P1-39	J15-4	VERT POS
P1-40	J15-4	VERT POS
P1-41	J15-5	VERT GAIN
P1-42	J15-5	VERT GAIN
P1-43	J15-6	VERT GAIN RTN
P1-44	J15-6	VERT GAIN RTN
P1-45	J15-44	OPTICAL ENC A
P1-46		
P1-47	J15-42	OPTICAL ENC B
P1-48		
P1-49	J15-25	10V/DIV RNG SEL
P1-50	J15-25	10V/DIV RNG SEL
P1-51	J15-26	1V/DIV RNG SEL
P1-52	J15-26	1V/DIV RNG SEL
P1-53	J15-27	0.1V/DIV RNG SEL

Table 5.1. System Motherboard Wirelist (Sheet 53 of 57)

FROM	TO	NAME
P1-54	J15-27	0.IV/DIV RNG SEL
P1-55	GND	GND
P1-56	GND	GND
P1-57	J15-28	0.01V/DIV RNG SEL
P1-58	J15-28	0.01V/DIV RNG SEL
P1-59	J15-48	HORIZ INPUT
P1-60	J15-49	HORIZ INPUT

Table 5.1. System Motherboard Wirelist (Sheet 54 of 57)

FROM	TO	NAME
FRONT PANEL		
P2-1	+12V	+12V
P2-2	J8-29	SQUELCH LVL
P2-3	J7-65	VOL CNTL AUDIO RTN
P2-4	J8-62 J10-47,48 J12-22 J13-22	VOL CNTL AUDIO
P2-5	J15-31	WB/NB
P2-6		
P2-7	J15-55	EXT HORIZ SEL
P2-8	J15-56	100 MS/DIV SWP SEL
P2-9	J15-57	10 MS/DIV SWP SEL
P2-10	J15-58	1 MS/DIV SWP SEL
P2-11	J15-59	100 µS/DIV SWP SEL
P2-12	J15-60	10 µS/DIV SWP SEL
P2-13	J15-61	1 µS/DIV SWP SEL
P2-14		
P2-15	+5V	+5V
P2-16	GND	GND
P2-17	J8-60	SIG PRES LED
P2-18	J8-27	BFO FREQ CNTL
P2-19	GND	GND
P2-20	GND	GND
P2-21	J15-81	MON/GEN
P2-22		
P2-23	J15-73	IMAGE HI/LO
P2-24		

Table 5.1. System Motherboard Wirelist (Sheet 55 of 57)

FROM	TO	NAME
P2-25		
P2-26		
P2-27	J7-80	HDST AUDIO
P2-28		
P2-29	J10-11,12 J12-13 J13-13	MIC IN
P2-30		
P2-31		
P2-32		
P2-33		
P2-34		
P2-35		
P2-36		
P2-37		
P2-38		
P2-39		
P2-40		
P2-41		
P2-42		
P2-43		
P2-44		
P2-45		
P2-46		
P2-47	J10-25,26 J12-40 J13-40	INT MOD (I)

Table 5.1. System Motherboard Wirelist (Sheet 56 of 57)

FROM	TO	NAME
P2-48	J10-25,26 J12-40 J13-40	INT MOD (I)
P2-49	J12-41 J13-41	INT MOD RTN (I)
P2-50	J12-41 J13-41	INT MOD RTN (I)
P2-51	GND	GND
P2-52	GND	GND
P2-53	J12-29 J13-29	1 KHZ SINE RTN (I)
P2-54	J12-29 J13-29	1 KHZ SINE RTN (I)
P2-55	J10-45,46 J12-28 J13-28	1 KHZ SINE (I)
P2-56	J12-35 J13-35	EXT MOD RTN (I)
P2-57	+5V	+5V
P2-58	J10-23,24 J12-34 J13-34	EXT MOD (I)
P2-59	GND	GND
P2-60	GND	GND

Table 5.1. System Motherboard Wirelist (Sheet 57 of 57)

FROM	TO	NAME
CAPACITORS		
C1-1	R1-1 E2	FP MOD OUT
C1-2	GND	
C2-1	R2-1 E3	DEMOD OUT
C2-2	GND	
110/220V SWITCH		
S1-1	J3-37,38	220 LOW
S1-2	E10 J3-29,30 NE2-2 V2-2	AC NEUT
S1-3	J3-41,42 J6-53,54	110 LOW
S1-4	S1-7	
S1-5	J3-35,36 NE1-2 V1-2	PRIMARY #1
S1-6	E10 J3-29,30 NE2-2 V2-2	AC NEUT
S1-7	S1-4	
S1-8	J3-31,32 NE2-1 V2-1	PRIMARY #2
S1-9	E9 J3-33,34 NE1-1 V1-1	AC HOT
VARISTORS		
V1-1	E9 J3-33,34 NE1-1 S1-9	AC HOT
V1-2	J3-35,36 NE1-2 S1-5	PRIMARY #1
V2-1	J3-31,32 NE2-1 S1-8	PRIMARY #2
V2-2	E10 J3-29,30 NE2-2 S1-2,6	AC NEUT
NEON BULBS		
NE1-1	E9 J3-33,34 S1-9 V1-1	AC HOT
NE1-2	J3-35,36 S1-5 V1-2	PRIMARY #1
NE2-1	J3-31,32 S1-8 V2-1	PRIMARY #2
NE2-2	E10 J3-29,30 S1-2,6 V2-2	AC NEUT
RESISTORS		
R1-1	E2 C1-1	FP MOD OUT
R1-2	J10-43,44	
R2-1	E3 C2-1	DEMOD OUT
R2-2	J8-64	DEMOD OUT

Table 5-2a. System Wirelist– High-Voltage Power Supply (A1)

1	2	3	4	5	6	7	8	9
WIRE NO.	COLOR SIZE AWG	WIRE RUNS FROM	NOTE OR VIEW	TO	NOTE OR VIEW	FUNCTION ROUTING REMARKS	APPROX LENGTH (INCHES)	USE FIND NO.
	A1 EDGE CARD	A1 P1 - 1		A19 J1 - 1		GND		
	A1 EDGE CARD	A1 P1 - 2		A19 J1 - 2		GND		
	A1 EDGE CARD	A1 P1 - 3		A19 J1 - 3		HV REFERENCE		
	A1 EDGE CARD	A1 P1 - 4		A19 J1 - 4		HV REFERENCE		
	A1 EDGE CARD	A1 P1 - 5		A19 J1 - 5		$\overline{\text{HV CHOPPER DR}}$		
	A1 EDGE CARD	A1 P1 - 6		A19 J1 - 6		$\overline{\text{HV CHOPPER DR}}$		
	A1 EDGE CARD	A1 P1 - 7		A19 J1 - 7		HV CHOPPER DR		
	A1 EDGE CARD	A1 P1 - 8		A19 J1 - 8		HV CHOPPER DR		
	A1 EDGE CARD	A1 P1 - 9		A19 J1 - 9		NC		
	A1 EDGE CARD	A1 P1 - 10		A19 J1 - 10		NC		
	A1 EDGE CARD	A1 P1 - 11		A19 J1 - 11		+ 12V		
	A1 EDGE CARD	A1 P1 - 12		A19 J1 - 12		+ 12V		
	A1 EDGE CARD	A1 P1 - 13		A19 J1 - 13		NC		
	A1 EDGE CARD	A1 P1 - 14		A19 J1 - 14		NC		
	A1 EDGE CARD	A1 P1 - 15		A19 J1 - 15		NC		
	A1 EDGE CARD	A1 P1 - 16		A19 J1 - 16		NC		
	A1 EDGE CARD	A1 P1 - 17		A19 J1 - 17		GND		
	A1 EDGE CARD	A1 P1 - 18		A19 J1 - 18		GND		
	A1 EDGE CARD	A1 P1 - 19		A19 J1 - 19		NC		
	A1 EDGE CARD	A1 P1 - 20		A19 J1 - 20		NC		
	A1 EDGE CARD	A1 P1 - 21		A19 J1 - 21		INTENSITY TV		
	A1 EDGE CARD	A1 P1 - 22		A19 J1 - 22		INTENSITY TV		
	A1 EDGE CARD	A1 P1 - 23		A19 J1 - 23		ASTIGMATISM		
	A1 EDGE CARD	A1 P1 - 24		A19 J1 - 24		ASTIGMATISM		
	A1 EDGE CARD	A1 P1 - 25		A19 J1 - 25		GEOMETRY		
	A1 EDGE CARD	A1 P1 - 26		A19 J1 - 26		GEOMETRY		
	A1 EDGE CARD	A1 P1 - 27		A19 J1 - 27		INTEN. SAMPLE V		
	A1 EDGE CARD	A1 P1 - 28		A19 J1 - 28		INTEN. SAMPLE V		
	A1 EDGE CARD	A1 P1 - 29		A19 J1 - 29		CRT Z-AXIS		
	A1 EDGE CARD	A1 P1 - 30		A19 J1 - 30		CRT Z-AXIS		
	A1 EDGE CARD	A1 P1 - 31		A19 J1 - 31		FOCUS SAMPLE V		
	A1 EDGE CARD	A1 P1 - 32		A19 J1 - 32		FOCUS SAMPLE V		
	A1 EDGE CARD	A1 P1 - 33		A19 J1 - 33		FOCUS TV		
	A1 EDGE CARD	A1 P1 - 34		A19 J1 - 34		FOCUS TV		
	A1 EDGE CARD	A1 P1 - 35		A19 J1 - 35		GND		
	A1 EDGE CARD	A1 P1 - 36		A19 J1 - 36		GND		
500	WHT HI VOLTTEF	A1A2 P2 - 1		A1A1 T1 - 4		HEATER	10.50	4
501	WHT HI VOLTTEF	A1A2 P2 - 2		A1A1 P2 - 2		CATHODE	10.50	4
502	WHT HI VOLTTEF	A1A2 P2 - 3		A1A1 P2 - 3		GRID	11.00	4
503	WHT HI VOLTTEF	A1A2 P2 - 4		A1A1 P2 - 4		FOCUS	11.50	4
504	WHT TEF 24	A1A2 P2 - 5		A1A1 P2 - 5		GEOM	12.50	5
505	WHT TEF 24	A1A2 P2 - 6		A1A1 P2 - 6		ASTIG	13.00	5
506	WHT TEF 24	A1A2 P2 - 7		A1A1 P2 - 7		ACCELERATOR	13.00	5
507	WHT TEF 22	A1A2 P2 - 8		A1A2 E - 8		$\overline{\text{VERT DEFL PLATE}}$	1.00	2
508	WHT TEF 22	A1A2 P2 - 9		A1A2 E - 9		VERT DEFL PLATE	1.00	2
509	WHT TEF 22	A1A2 P2 - 10		A1A2 E - 10		$\overline{\text{HORIZ DEFL PLATE}}$	1.00	2
510	WHT TEF 22	A1A2 P2 - 11		A1A2 E - 11		HORIZ DEFL PLATE	1.00	2

Table 5-2a. System Wirelist – High-Voltage Power Supply (A1) (Cont)

1	2	3	4	5	6	7	8	9
WIRE NO.	COLOR SIZE AWG	WIRE RUNS FROM	NOTE OR VIEW	TO	NOTE OR VIEW	FUNCTION ROUTING REMARKS	APPROX LENGTH (INCHES)	USE FIND NO.
		A1A2 P2 - 12		NC				
		A1A2 P2 - 13		NC				
511	WHT HI VOLTTEF	A1A2 P2 - 14		A1A1 T1 - 5		HEATER	10.50	4
512	WHT TEF 24	A1A2 P2 - 1		A1A2 P2 - 2		JUMPER	1.50	5
	(CRT DEFL PLUG)	NC		P3 - 1		(PIN NOT USED)		
513	WHT TEF 22	A1A2 - 2		P3 - 2		VERT DEFL PLATE	11.00	2
514	WHT TEF 22	A1A2 - 3		P3 - 3		VERT DEFL PLATE	12.00	2
515	WHT TEF 22	A1A2 - 4		P3 - 4		HORIZ DEFL PLATE	11.75	2
516	WHT TEF 22	A1A2 - 5		P3 - 5		HORIZ DEFL PLATE	13.00	2
517	WHT TEF 16	A1A2 - 7		GND LUG		GND	4.00	3
	HIGH VOLT 22	A1A1 P5 - 1		CRT ANODE		HIGH VOLTAGE +4 KV	16.00	

Table 5-2b. System Wirelist–Scope Amplifier Board (A2)

1	2	3	4	5	6	7	8	9
WIRE NO.	COLOR SIZE AWG	WIRE RUNS FROM	NOTE OR VIEW	TO	NOTE OR VIEW	FUNCTION ROUTING REMARKS	APPROX LENGTH (INCHES)	USE FIND NO.
	A2 EDGE CARD	A2 P1 - 1		A19 J2 - 1		GND		
	A2 EDGE CARD	A2 P1 - 2		A19 J2 - 2		GND		
	A2 EDGE CARD	A2 P1 - 3		A19 J2 - 3		CRT Z-AXIS		
	A2 EDGE CARD	A2 P1 - 4		A19 J2 - 4		NC		
	A2 EDGE CARD	A2 P1 - 5		A19 J2 - 5		NC		
	A2 EDGE CARD	A2 P1 - 6		A19 J2 - 6		NC		
	A2 EDGE CARD	A2 P1 - 7		A19 J2 - 7		SCOPE SWP CNTL 2		
	A2 EDGE CARD	A2 P1 - 8		A19 J2 - 8		NC		
	A2 EDGE CARD	A2 P1 - 9		A19 J2 - 9		SCOPE SWP CNTL 1		
	A2 EDGE CARD	A2 P1 - 10		A19 J2 - 10		HORIZ TIME BASE EN		
	A2 EDGE CARD	A2 P1 - 11		A19 J2 - 11		SCOPE SWP CNTL 0		
	A2 EDGE CARD	A2 P1 - 12		A19 J2 - 12		INT SCOPE HORIZ		
	A2 EDGE CARD	A2 P1 - 13		A19 J2 - 13		SWEEP BLANKING		
	A2 EDGE CARD	A2 P1 - 14		A19 J2 - 14		SCOPE MODE ENABLE		
	A2 EDGE CARD	A2 P1 - 15		A19 J2 - 15		EXT HORIZ ENABLE		
	A2 EDGE CARD	A2 P1 - 16		A19 J2 - 16		NC		
	A2 EDGE CARD	A2 P1 - 17		A19 J2 - 17		HORIZ TO SCOPE AMP		
	A2 EDGE CARD	A2 P1 - 18		A19 J2 - 18		NC		
	A2 EDGE CARD	A2 P1 - 19		A19 J2 - 19		SCOPE SWP CNTL 3		
	A2 EDGE CARD	A2 P1 - 20		A19 J2 - 20		TRIG PULSE		
	A2 EDGE CARD	A2 P1 - 21		A19 J2 - 21		INTENSITY TV		
	A2 EDGE CARD	A2 P1 - 22		A19 J2 - 22		SYNC PRESENT		
	A2 EDGE CARD	A2 P1 - 23		A19 J2 - 23		SCOPE - AXIS		
	A2 EDGE CARD	A2 P1 - 24		A19 J2 - 24		AUTO/NORM TRIG-SEL		
	A2 EDGE CARD	A2 P1 - 25		A19 J2 - 25		NC		

Table 5-2b. System Wirelist–Scope Amplifier Board (A2) (Cont)

1	2	3	4	5	6	7	8	9
WIRE NO.	COLOR / SIZE AWG	WIRE RUNS FROM	NOTE OR VIEW	WIRE RUNS TO	NOTE OR VIEW	FUNCTION ROUTING REMARKS	APPROX LENGTH (INCHES)	USE FIND NO.
	A2 EDGE CARD	A2 P1 - 26		A19 J2 - 26		INTENSITY SAMPLE VOLT		
	A2 EDGE CARD	A2 P1 - 27		A19 J2 - 27		NC		
	A2 EDGE CARD	A2 P1 - 28		A19 J2 - 28		FOCUS TV		
	A2 EDGE CARD	A2 P1 - 29		A19 J2 - 29		−8V		
	A2 EDGE CARD	A2 P1 - 30		A19 J2 - 30		−8V		
	A2 EDGE CARD	A2 P1 - 31		A19 J2 - 31		+8V		
	A2 EDGE CARD	A2 P1 - 32		A19 J2 - 32		+8V		
	A2 EDGE CARD	A2 P1 - 33		A19 J2 - 33		−12V		
	A2 EDGE CARD	A2 P1 - 34		A19 J2 - 34		−12V		
	A2 EDGE CARD	A2 P1 - 35		A19 J2 - 35		+12V		
	A2 EDGE CARD	A2 P1 - 36		A19 J2 - 36		+12V		
	A2 EDGE CARD	A2 P1 - 37		A19 J2 - 37		+33V		
	A2 EDGE CARD	A2 P1 - 38		A19 J2 - 38		+33V		
	A2 EDGE CARD	A2 P1 - 39		A19 J2 - 39		−5V		
	A2 EDGE CARD	A2 P1 - 40		A19 J2 - 40		−5V		
	A2 EDGE CARD	A2 P1 - 41		A19 J2 - 41		+5V		
	A2 EDGE CARD	A2 P1 - 42		A19 J2 - 42		+5V		
	A2 EDGE CARD	A2 P1 - 43		A19 J2 - 43		INTENSITY LEVEL		
	A2 EDGE CARD	A2 P1 - 44		A19 J2 - 44		NC		
	A2 EDGE CARD	A2 P1 - 45		A19 J2 - 45		HORIZ POSITION		
	A2 EDGE CARD	A2 P1 - 46		A19 J2 - 46		HIGH VOLTAGE REF		
	A2 EDGE CARD	A2 P1 - 47		A19 J2 - 47		NC		
	A2 EDGE CARD	A2 P1 - 48		A19 J2 - 48		VERT TO SCOPE		
	A2 EDGE CARD	A2 P1 - 49		A19 J2 - 49		NC		
	A2 EDGE CARD	A2 P1 - 50		A19 J2 - 50		TRACE ROTATION		
	A2 EDGE CARD	A2 P1 - 51		A19 J2 - 51		NC		
	A2 EDGE CARD	A2 P1 - 52		A19 J2 - 52		NC		
	A2 EDGE CARD	A2 P1 - 53		A19 J2 - 53		SWEEP VERNIER VOLT		
	A2 EDGE CARD	A2 P1 - 54		A19 J2 - 54		FOCUS SAMPLE VOLT		
	A2 EDGE CARD	A2 P1 - 55		A19 J2 - 55		ASTIGMATISM		
	A2 EDGE CARD	A2 P1 - 56		A19 J2 - 56		NC		
	A2 EDGE CARD	A2 P1 - 57		A19 J2 - 57		GEOMETRY		
	A2 EDGE CARD	A2 P1 - 58		A19 J2 - 58		NC		
	A2 EDGE CARD	A2 P1 - 59		A19 J2 - 59		FOCUS LEVEL		
	A2 EDGE CARD	A2 P1 - 60		A19 J2 - 60		NC		
	A2 EDGE CARD	A2 P1 - 61		A19 J2 - 61		NC		
	A2 EDGE CARD	A2 P1 - 62		A19 J2 - 62		NC		
	A2 EDGE CARD	A2 P1 - 63		A19 J2 - 63		+110V		
	A2 EDGE CARD	A2 P1 - 64		A19 J2 - 64		+110V		
	A2 EDGE CARD	A2 P1 - 65		A19 J2 - 65		NC		
	A2 EDGE CARD	A2 P1 - 66		A19 J2 - 66		NC		
	A2 EDGE CARD	A2 P1 - 67		A19 J2 - 67		−110V		
	A2 EDGE CARD	A2 P1 - 68		A19 J2 - 68		−110V		
	A2 EDGE CARD	A2 P1 - 69		A19 J2 - 69		NC		
	A2 EDGE CARD	A2 P1 - 70		A2 J2 - 70		NC		
	A2 EDGE CARD	A2 P1 - 71		A2 J2 - 71		GND		
	A2 EDGE CARD	A2 P1 - 72		A2 J2 - 72		GND		

Table 5-2b. System Wirelist–Scope Amplifier Board (A2) (Cont)

1	2	3	4	5	6	7	8	9
WIRE NO.	COLOR SIZE AWG	WIRE RUNS FROM	NOTE OR VIEW	TO	NOTE OR VIEW	FUNCTION ROUTING REMARKS	APPROX LENGTH (INCHES)	USE FIND NO.
	A2 CRT DEFLECTION	A2 J3 - 1		A1 P3 - 1		NC		
	A2 CRT DEFLECTION	A2 J3 - 2		A1 P3 - 2		$\overline{\text{VERT DEFL PLATE}}$		
	A2 CRT DEFLECTION	A2 J3 - 3		A1 P3 - 3		VERT DEFL PLATE		
	A2 CRT DEFLECTION	A2 J3 - 4		A1 P3 - 4		$\overline{\text{HORIZ DEFL PLATE}}$		
	A2 CRT DEFLECTION	A2 J3 - 5		A1 P3 - 5		HORIZ DEFL PLATE		

Table 5-2c. System Wirelist – Low-Voltage Power Supply Battery Charger Board (A3)

1	2	3	4	5	6	7	8	9
WIRE NO.	COLOR SIZE AWG	WIRE RUNS FROM	NOTE OR VIEW	TO	NOTE OR VIEW	FUNCTION ROUTING REMARKS	APPROX LENGTH (INCHES)	USE FIND NO.
	A3 EDGE CARD	A3 P1 - 1		A19 J3 - 1		GND		
	A3 EDGE CARD	A3 P1 - 2		A19 J3 - 2		GND		
	A3 EDGE CARD	A3 P1 - 3		A19 J3 - 3		GND		
	A3 EDGE CARD	A3 P1 - 4		A19 J3 - 4		GND		
	A3 EDGE CARD	A3 P1 - 5		A19 J3 - 5		+5V		
	A3 EDGE CARD	A3 P1 - 6		A19 J3 - 6		+5V		
	A3 EDGE CARD	A3 P1 - 7		A19 J3 - 7		+5V		
	A3 EDGE CARD	A3 P1 - 8		A19 J3 - 8		+5V		
	A3 EDGE CARD	A3 P1 - 9		A19 J3 - 9		$\overline{\text{POWER ON}}$		
	A3 EDGE CARD	A3 P1 - 10		A19 J3 - 10		NC		
	A3 EDGE CARD	A3 P1 - 11		A19 J3 - 11		BATT CHG		
	A3 EDGE CARD	A3 P1 - 12		A19 J3 - 12		BATT CHG		
	A3 EDGE CARD	A3 P1 - 13		A19 J3 - 13		AC VOLTAGE SENSE		
	A3 EDGE CARD	A3 P1 - 14		A19 J3 - 14		NC		
	A3 EDGE CARD	A3 P1 - 15		A19 J3 - 15		FREQ STD SUPPLY		
	A3 EDGE CARD	A3 P1 - 16		A19 J3 - 16		FREQ STD SUPPLY		
	A3 EDGE CARD	A3 P1 - 17		A19 J3 - 17		−12V		
	A3 EDGE CARD	A3 P1 - 18		A19 J3 - 18		−5V TO SYNTH		
	A3 EDGE CARD	A3 P1 - 19		A19 J3 - 19		BLANK FOR ISOLATION		
	A3 EDGE CARD	A3 P1 - 20		A19 J3 - 20		BLANK FOR ISOLATION		
	A3 EDGE CARD	A3 P1 - 21		A19 J3 - 21		BLANK FOR ISOLATION		
	A3 EDGE CARD	A3 P1 - 22		A19 J3 - 22		BLANK FOR ISOLATION		
	A3 EDGE CARD	A3 P1 - 23		A19 J3 - 23		BLANK FOR ISOLATION		
	A3 EDGE CARD	A3 P1 - 24		A19 J3 - 24		BLANK FOR ISOLATION		
	A3 EDGE CARD	A3 P1 - 25		A19 J3 - 25		BLANK FOR ISOLATION		
	A3 EDGE CARD	A3 P1 - 26		A19 J3 - 26		BLANK FOR ISOLATION		
	A3 EDGE CARD	A3 P1 - 27		A19 J3 - 27		BLANK FOR ISOLATION		
	A3 EDGE CARD	A3 P1 - 28		A19 J3 - 28		BLANK FOR ISOLATION		
	A3 EDGE CARD	A3 P1 - 29		A19 J3 - 29		AC NEUT		
	A3 EDGE CARD	A3 P1 - 30		A19 J3 - 30		AC NEUT		

Table 5-2c. System Wirelist – Low-Voltage Power Supply
Battery Charger Board (A3) (Cont)

1	2	3	4	5	6	7	8	9
WIRE NO.	COLOR SIZE AWG	WIRE RUNS FROM	NOTE OR VIEW	TO	NOTE OR VIEW	FUNCTION ROUTING REMARKS	APPROX LENGTH (INCHES)	USE FIND NO.
	A3 EDGE CARD	A3 P1 - 31		A19 J3 - 31		PRIMARY #2		
	A3 EDGE CARD	A3 P1 - 32		A19 J3 - 32		PRIMARY #2		
	A3 EDGE CARD	A3 P1 - 33		A19 J3 - 33		AC HOT		
	A3 EDGE CARD	A3 P1 - 34		A19 J3 - 34		AC HOT		
	A3 EDGE CARD	A3 P1 - 35		A19 J3 - 35		PRIMARY #1		
	A3 EDGE CARD	A3 P1 - 36		A19 J3 - 36		PRIMARY #1		
	A3 EDGE CARD	A3 P1 - 37		A19 J3 - 37		220 LOW		
	A3 EDGE CARD	A3 P1 - 38		A19 J3 - 38		220 LOW		
	A3 EDGE CARD	A3 P1 - 39		A19 J3 - 39		V_c-		
	A3 EDGE CARD	A3 P1 - 40		A19 J3 - 40		V_c-		
	A3 EDGE CARD	A3 P1 - 41		A19 J3 - 41		110 LOW		
	A3 EDGE CARD	A3 P1 - 42		A19 J3 - 42		110 LOW		
	A3 EDGE CARD	A2 P1 - 43		A19 J3 - 43		V_c+		
	A3 EDGE CARD	A3 P1 - 44		A19 J3 - 44		V_c+		
	A3 EDGE CARD	A3 P1 - 45		A19 J3 - 45		BLANK FOR ISOLATION		
	A3 EDGE CARD	A3 P1 - 46		A19 J3 - 46		BLANK FOR ISOLATION		
	A3 EDGE CARD	A3 P1 - 47		A19 J3 - 47		BLANK FOR ISOLATION		
	A3 EDGE CARD	A3 P1 - 48		A19 J3 - 48		BLANK FOR ISOLATION		
	A3 EDGE CARD	A3 P1 - 49		A19 J3 - 49		BLANK FOR ISOLATION		
	A3 EDGE CARD	A3 P1 - 50		A19 J3 - 50		BLANK FOR ISOLATION		
519	WHT TEF 24	A3 E1		VR3	2	+5V	2.50	14

Table 5-2d. System Wirelist – Low-Voltage Power Supply
Control Board (A4)

1	2	3	4	5	6	7	8	9
WIRE NO.	COLOR SIZE AWG	WIRE RUNS FROM	NOTE OR VIEW	TO	NOTE OR VIEW	FUNCTION ROUTING REMARKS	APPROX LENGTH (INCHES)	USE FIND NO.
	A4 EDGE CARD	A4 P1 - 1		A19 J4 - 1		GND		
	A4 EDGE CARD	A4 P1 - 2		A19 J4 - 2		GND		
	A4 EDGE CARD	A4 P1 - 3		A19 J4 - 3		GND		
	A4 EDGE CARD	A4 P1 - 4		A19 J4 - 4		GND		
	A4 EDGE CARD	A4 P1 - 5		A19 J4 - 5		DC CURR SENSE RTN		
	A4 EDGE CARD	A4 P1 - 6		A19 J4 - 6		DC CURR SENSE RTN		
	A4 EDGE CARD	A4 P1 - 7		A19 J4 - 7		DC CURR SENSE		
	A4 EDGE CARD	A4 P1 - 8		A19 J4 - 8		DC CURR SENSE		
	A4 EDGE CARD	A4 P1 - 9		A19 J4 - 9		DC IN		
	A4 EDGE CARD	A4 P1 - 10		A19 J4 - 10		DC IN		
	A4 EDGE CARD	A4 P1 - 11		A19 J4 - 11		+12V		
	A4 EDGE CARD	A4 P1 - 12		A19 J4 - 12		−12V		
	A4 EDGE CARD	A4 P1 - 13		A19 J4 - 13		+5V		
	A4 EDGE CARD	A4 P1 - 14		A19 J4 - 14		+5V		

Table 5-2d. System Wirelist – Low-Voltage Power Supply Control Board (A4) (Cont)

1	2	3	4	5	6	7	8	9
WIRE NO.	COLOR / SIZE AWG	WIRE RUNS FROM	NOTE OR VIEW	TO	NOTE OR VIEW	FUNCTION ROUTING REMARKS	APPROX LENGTH (INCHES)	USE FIND NO.
	A4 EDGE CARD	A4 P1 - 15		A19 J4 - 15		−5V		
	A4 EDGE CARD	A4 P1 - 16		A19 J4 - 16		−5V		
	A4 EDGE CARD	A4 P1 - 17		A19 J4 - 17		$\overline{\text{HV CHOPPER DR}}$		
	A4 EDGE CARD	A4 P1 - 18		A19 J4 - 18		$\overline{\text{HV CHOPPER DR}}$		
	A4 EDGE CARD	A4 P1 - 19		A19 J4 - 19		HV CHOPPER DR		
	A4 EDGE CARD	A4 P1 - 20		A19 J4 - 20		HV CHOPPER DR		
	A4 EDGE CARD	A4 P1 - 21		A19 J4 - 21		DC BUS		
	A4 EDGE CARD	A4 P1 - 22		A19 J4 - 22		DC BUS		
	A4 EDGE CARD	A4 P1 - 23		A19 J4 - 23		$\overline{\text{PWR OFF}}$		
	A4 EDGE CARD	A4 P1 - 24		A19 J4 - 24		$\overline{\text{PWR ON}}$		
	A4 EDGE CARD	A4 P1 - 25		A19 J4 - 25		AC LED		
	A4 EDGE CARD	A4 P1 - 26		A19 J4 - 26		AC VOLTAGE SENSE		
	A4 EDGE CARD	A4 P1 - 27		A19 J4 - 27		$\overline{\text{DC DRIVE}}$		
	A4 EDGE CARD	A4 P1 - 28		A19 J4 - 28		$\overline{\text{DC DRIVE}}$		
	A4 EDGE CARD	A4 P1 - 29		A19 J4 - 29		DC DRIVE		
	A4 EDGE CARD	A4 P1 - 30		A19 J4 - 30		DC DRIVE		
	A4 EDGE CARD	A4 P1 - 31		A19 J4 - 31		$\overline{\text{RELAY ON}}$		
	A4 EDGE CARD	A4 P1 - 32		A19 J4 - 32		$\overline{\text{RELAY ON}}$		
	A4 EDGE CARD	A4 P1 - 33		A19 J4 - 33		$\overline{\text{AC DRIVE}}$		
	A4 EDGE CARD	A4 P1 - 34		A19 J4 - 34		FREQ STD SUPPLY		
	A4 EDGE CARD	A4 P1 - 35		A19 J4 - 35		AC DRIVE		
	A4 EDGE CARD	A4 P1 - 36		A19 J4 - 36		FREQ STD SUPPLY		
	A4 EDGE CARD	A4 P1 - 37		A19 J4 - 37		DC LED		
	A4 EDGE CARD	A4 P1 - 38		A19 J4 - 38		AC CURRENT SENSE		
	A4 EDGE CARD	A4 P1 - 39		A19 J4 - 39		$\overline{\text{AC CURRENT SENSE}}$		
	A4 EDGE CARD	A4 P1 - 40		A19 J4 - 40		GND		
	A4 EDGE CARD	A4 P1 - 41		A19 J4 - 41		GND		
	A4 EDGE CARD	A4 P1 - 42		A19 J4 - 42		GND		
	A4 EDGE CARD	A4 P1 - 43		A19 J4 - 43		NC		
	A4 EDGE CARD	A4 P1 - 44		A19 J4 - 44		NC		
	A4 EDGE CARD	A4 P1 - 45		A19 J4 - 45		NC		
	A4 EDGE CARD	A4 P1 - 46		A19 J4 - 46		NC		
	A4 EDGE CARD	A4 P1 - 47		A19 J4 - 47		NC		
	A4 EDGE CARD	A4 P1 - 48		A19 J4 - 48		NC		
	A4 EDGE CARD	A4 P1 - 49		A19 J4 - 49		NC		
	A4 EDGE CARD	A4 P1 - 50		A19 J4 - 50		NC		

Table 5-2e. System Wirelist – Low-Voltage Power Supply Output Board (A5)

1	2	3	4	5	6	7	8	9
WIRE NO.	COLOR SIZE AWG	WIRE RUNS FROM	NOTE OR VIEW	TO	NOTE OR VIEW	FUNCTION ROUTING REMARKS	APPROX LENGTH (INCHES)	USE FIND NO.
	A5 EDGE CARD	A5 P1 - 1		A19 J5 - 1		GND		
	A5 EDGE CARD	A5 P1 - 2		A19 J5 - 2		GND		
	A5 EDGE CARD	A5 P1 - 3		A19 J5 - 3		GND		
	A5 EDGE CARD	A5 P1 - 4		A19 J5 - 4		GND		
	A5 EDGE CARD	A5 P1 - 5		A19 J5 - 5		+12V		
	A5 EDGE CARD	A5 P1 - 6		A19 J5 - 6		+12V		
	A5 EDGE CARD	A5 P1 - 7		A19 J5 - 7		+12V		
	A5 EDGE CARD	A5 P1 - 8		A19 J5 - 8		+5V		
	A5 EDGE CARD	A5 P1 - 9		A19 J5 - 9		+5V		
	A5 EDGE CARD	A5 P1 - 10		A19 J5 - 10		+5V		
	A5 EDGE CARD	A5 P1 - 11		A19 J5 - 11		−5V		
	A5 EDGE CARD	A5 P1 - 12		A19 J5 - 12		−5V		
	A5 EDGE CARD	A5 P1 - 13		A19 J5 - 13		−12V		
	A5 EDGE CARD	A5 P1 - 14		A19 J5 - 14		−12V		
	A5 EDGE CARD	A5 P1 - 15		A19 J5 - 15		XFMR DR DC		
	A5 EDGE CARD	A5 P1 - 16		A19 J5 - 16		XFMR DR DC		
	A5 EDGE CARD	A5 P1 - 17		A19 J5 - 17		XFMR DR DC		
	A5 EDGE CARD	A5 P1 - 18		A19 J5 - 18		XFMR DR DC		
	A5 EDGE CARD	A5 P1 - 19		A19 J5 - 19		DC CT		
	A5 EDGE CARD	A5 P1 - 20		A19 J5 - 20		DC CT		
	A5 EDGE CARD	A5 P1 - 21		A19 J5 - 21		DC CT		
	A5 EDGE CARD	A5 P1 - 22		A19 J5 - 22		DC CT		
	A5 EDGE CARD	A5 P1 - 23		A19 J5 - 23		DC CT		
	A5 EDGE CARD	A5 P1 - 24		A19 J5 - 24		DC CT		
	A5 EDGE CARD	A5 P1 - 25		A19 J5 - 25		DC CT		
	A5 EDGE CARD	A5 P1 - 26		A19 J5 - 26		$\overline{\text{XFMR DR DC}}$		
	A5 EDGE CARD	A5 P1 - 27		A19 J5 - 27		$\overline{\text{XFMR DR DC}}$		
	A5 EDGE CARD	A5 P1 - 28		A19 J5 - 28		$\overline{\text{XFMR DR DC}}$		
	A5 EDGE CARD	A5 P1 - 29		A19 J5 - 29		$\overline{\text{XFMR DR DC}}$		
	A5 EDGE CARD	A5 P1 - 30		A19 J5 - 30		−110V		
	A5 EDGE CARD	A5 P1 - 31		A19 J5 - 31		+33V		
	A5 EDGE CARD	A5 P1 - 32		A19 J5 - 32		+33V		
	A5 EDGE CARD	A5 P1 - 33		A19 J5 - 33		+110V		
	A5 EDGE CARD	A5 P1 - 34		A19 J5 - 34		AC CURRENT SENSE		
	A5 EDGE CARD	A5 P1 - 35		A19 J5 - 35		$\overline{\text{AC CURRENT SENSE}}$		
	A5 EDGE CARD	A5 P1 - 36		A19 J5 - 36		GND		
	A5 EDGE CARD	A5 P1 - 37		A19 J5 - 37		GND		
	A5 EDGE CARD	A5 P1 - 38		A19 J5 - 38		GND		
	A5 EDGE CARD	A5 P1 - 39		A19 J5 - 39		BLANK FOR ISOLATION		
	A5 EDGE CARD	A5 P1 - 40		A19 J5 - 40		BLANK FOR ISOLATION		
	A5 EDGE CARD	A5 P1 - 41		A19 J5 - 41		BLANK FOR ISOLATION		
	A5 EDGE CARD	A5 P1 - 42		A19 J5 - 42		BLANK FOR ISOLATION		
	A5 EDGE CARD	A5 P1 - 43		A19 J5 - 43		BLANK FOR ISOLATION		
	A5 EDGE CARD	A5 P1 - 44		A19 J5 - 44		BLANK FOR ISOLATION		
	A5 EDGE CARD	A5 P1 - 45		A19 J5 - 45		BLANK FOR ISOLATION		
	A5 EDGE CARD	A5 P1 - 46		A19 J5 - 46		BLANK FOR ISOLATION		
	A5 EDGE CARD	A5 P1 - 47		A19 J5 - 47		$\overline{\text{XFMR DR AC}}$		

Table 5-2e. System Wirelist – Low-Voltage Power Supply Output Board (A5) (Cont)

1	2	3	4	5	6	7	8	9
WIRE NO.	COLOR SIZE AWG	WIRE RUNS FROM	NOTE OR VIEW	TO	NOTE OR VIEW	FUNCTION ROUTING REMARKS	APPROX LENGTH (INCHES)	USE FIND NO.
	A5 EDGE CARD	A5 P1 - 48		A19 J5 - 48		$\overline{\text{XFMR DR AC}}$		
	A5 EDGE CARD	A5 P1 - 49		A19 J5 - 49		XFMR DR AC		
	A5 EDGE CARD	A5 P1 - 50		A19 J5 - 50		XFMR DR AC		

Table 5-2f. System Wirelist – Low-Voltage Power Supply Switcher Board (A6)

1	2	3	4	5	6	7	8	9
WIRE NO.	COLOR SIZE AWG	WIRE RUNS FROM	NOTE OR VIEW	TO	NOTE OR VIEW	FUNCTION ROUTING REMARKS	APPROX LENGTH (INCHES)	USE FIND NO.
	A6 EDGE CARD	A6 P1 - 1		A19 J6 - 1		GND		
	A6 EDGE CARD	A6 P1 - 2		A19 J6 - 2		GND		
	A6 EDGE CARD	A6 P1 - 3		A19 J6 - 3		GND		
	A6 EDGE CARD	A6 P1 - 4		A19 J6 - 4		GND		
	A6 EDGE CARD	A6 P1 - 5		A19 J6 - 5		DC CURR SENSE RTN		
	A6 EDGE CARD	A6 P1 - 6		A19 J6 - 6		DC CURR SENSE		
	A6 EDGE CARD	A6 P1 - 7		A19 J6 - 7		DC IN		
	A6 EDGE CARD	A6 P1 - 8		A19 J6 - 8		DC IN		
	A6 EDGE CARD	A6 P1 - 9		A19 J6 - 9		DC IN		
	A6 EDGE CARD	A6 P1 - 10		A19 J6 - 10		DC IN		
	A6 EDGE CARD	A6 P1 - 11		A19 J6 - 11		DC IN		
	A6 EDGE CARD	A6 P1 - 12		A19 J6 - 12		DC IN		
	A6 EDGE CARD	A6 P1 - 13		A19 J6 - 13		DC IN		
	A6 EDGE CARD	A6 P1 - 14		A19 J6 - 14		DC IN		
	A6 EDGE CARD	A6 P1 - 15		A19 J6 - 15		DC BUS		
	A6 EDGE CARD	A6 P1 - 16		A19 J6 - 16		DC BUS		
	A6 EDGE CARD	A6 P1 - 17		A19 J6 - 17		XFMR DR DC		
	A6 EDGE CARD	A6 P1 - 18		A19 J6 - 18		XFMR DR DC		
	A6 EDGE CARD	A6 P1 - 19		A19 J6 - 19		XFMR DR DC		
	A6 EDGE CARD	A6 P1 - 20		A19 J6 - 20		XFMR DR DC		
	A6 EDGE CARD	A6 P1 - 21		A19 J6 - 21		DC CT		
	A6 EDGE CARD	A6 P1 - 22		A19 J6 - 22		DC CT		
	A6 EDGE CARD	A6 P1 - 23		A19 J6 - 23		DC CT		
	A6 EDGE CARD	A6 P1 - 24		A19 J6 - 24		DC CT		
	A6 EDGE CARD	A6 P1 - 25		A19 J6 - 25		DC CT		
	A6 EDGE CARD	A6 P1 - 26		A19 J6 - 26		DC CT		
	A6 EDGE CARD	A6 P1 - 27		A19 J6 - 27		DC CT		
	A6 EDGE CARD	A6 P1 - 28		A19 J6 - 28		$\overline{\text{XFMR DR DC}}$		
	A6 EDGE CARD	A6 P1 - 29		A19 J6 - 29		$\overline{\text{XFMR DR DC}}$		
	A6 EDGE CARD	A6 P1 - 30		A19 J6 - 30		$\overline{\text{XFMR DR DC}}$		
	A6 EDGE CARD	A6 P1 - 31		A19 J6 - 31		$\overline{\text{XFMR DR DC}}$		
	A6 EDGE CARD	A6 P1 - 32		A19 J6 - 32		$\overline{\text{DC DRIVE}}$		

Table 5-2f. System Wirelist – Low-Voltage Power Supply Switcher Board (A6) (Cont)

1	2	3	4	5	6	7	8	9
WIRE NO.	COLOR SIZE AWG	WIRE RUNS FROM	NOTE OR VIEW	TO	NOTE OR VIEW	FUNCTION ROUTING REMARKS	APPROX LENGTH (INCHES)	USE FIND NO.
	A6 EDGE CARD	A6 P1 - 33		A19 J6 - 33		DC DRIVE		
	A6 EDGE CARD	A6 P1 - 34		A19 J6 - 34		$\overline{\text{RELAY ON}}$		
	A6 EDGE CARD	A6 P1 - 35		A19 J6 - 35		$\overline{\text{AC DRIVE}}$		
	A6 EDGE CARD	A6 P1 - 36		A19 J6 - 36		AC DRIVE		
	A6 EDGE CARD	A6 P1 - 37		A19 J6 - 37		GND		
	A6 EDGE CARD	A6 P1 - 38		A19 J6 - 38		GND		
	A6 EDGE CARD	A6 P1 - 39		A19 J6 - 39		BLANK FOR ISOLATION		
	A6 EDGE CARD	A6 P1 - 40		A19 J6 - 40		BLANK FOR ISOLATION		
	A6 EDGE CARD	A6 P1 - 41		A19 J6 - 41		BLANK FOR ISOLATION		
	A6 EDGE CARD	A6 P1 - 42		A19 J6 - 42		BLANK FOR ISOLATION		
	A6 EDGE CARD	A6 P1 - 43		A19 J6 - 43		BLANK FOR ISOLATION		
	A6 EDGE CARD	A6 P1 - 44		A19 J6 - 44		BLANK FOR ISOLATION		
	A6 EDGE CARD	A6 P1 - 45		A19 J6 - 45		BLANK FOR ISOLATION		
	A6 EDGE CARD	A6 P1 - 46		A19 J6 - 46		BLANK FOR ISOLATION		
	A6 EDGE CARD	A6 P1 - 47		A19 J6 - 47		V_c-		
	A6 EDGE CARD	A6 P1 - 48		A19 J6 - 48		V_c-		
	A6 EDGE CARD	A6 P1 - 49		A19 J6 - 49		$\overline{\text{XFMR DR AC}}$		
	A6 EDGE CARD	A6 P1 - 50		A19 J6 - 50		$\overline{\text{XFMR DR AC}}$		
	A6 EDGE CARD	A6 P1 - 51		A19 J6 - 51		XFMR DR AC		
	A6 EDGE CARD	A6 P1 - 52		A19 J6 - 52		XFMR DR AC		
	A6 EDGE CARD	A6 P1 - 53		A19 J6 - 53		110 LOW		
	A6 EDGE CARD	A6 P1 - 54		A19 J6 - 54		110 LOW		
	A6 EDGE CARD	A6 P1 - 55		A19 J6 - 55		V_c+		
	A6 EDGE CARD	A6 P1 - 56		A19 J6 - 56		V_c+		
	A6 EDGE CARD	A6 P1 - 57		A19 J6 - 57		BLANK FOR ISOLATION		
	A6 EDGE CARD	A6 P1 - 58		A19 J6 - 58		BLANK FOR ISOLATION		
	A6 EDGE CARD	A6 P1 - 59		A19 J6 - 59		BLANK FOR ISOLATION		
	A6 EDGE CARD	A6 P1 - 60		A19 J6 - 60		BLANK FOR ISOLATION		

Table 5-2g. System Wirelist – Scope/DVM Control Board (A7)

1	2	3	4	5	6	7	8	9
WIRE NO.	COLOR SIZE AWG	WIRE RUNS FROM	NOTE OR VIEW	TO	NOTE OR VIEW	FUNCTION ROUTING REMARKS	APPROX LENGTH (INCHES)	USE FIND NO.
	A7 EDGE CARD	A7 P1 - 1		A19 J7 - 1		DVM GND		
	A7 EDGE CARD	A7 P1 - 2		A19 J7 - 2		DVM GND		
	A7 EDGE CARD	A7 P1 - 3		A19 J7 - 3		EXT DVM TO A/D		
	A7 EDGE CARD	A7 P1 - 4		A19 J7 - 4		VERT FROM RNG SW		
	A7 EDGE CARD	A7 P1 - 5		A19 J7 - 5		TRIG LVL		
	A7 EDGE CARD	A7 P1 - 6		A19 J7 - 6		DVM FROM RNG SW		
	A7 EDGE CARD	A7 P1 - 7		A19 J7 - 7		INT DVM TO A/D		

Table 5-2g. System Wirelist – Scope/DVM Control Board (A7) (Cont)

1	2	3	4	5	6	7	8	9
WIRE NO.	COLOR · SIZE AWG	WIRE RUNS FROM	NOTE OR VIEW	TO	NOTE OR VIEW	FUNCTION ROUTING REMARKS	APPROX LENGTH (INCHES)	USE FIND NO.
	A7 EDGE CARD	A7 P1 - 8		A19 J7 - 8		RF INPUT POWER		
	A7 EDGE CARD	A7 P1 - 9		A19 J7 - 9		NC		
	A7 EDGE CARD	A7 P1 - 10		A19 J7 - 10		VERT CHAR SYNC		
	A7 EDGE CARD	A7 P1 - 11		A19 J7 - 11		NC		
	A7 EDGE CARD	A7 P1 - 12		A19 J7 - 12		TRIG PULSE		
	A7 EDGE CARD	A7 P1 - 13		A19 J7 - 13		AF ADD BUS 0		
	A7 EDGE CARD	A7 P1 - 14		A19 J7 - 14		SCOPE SWP CNTL 0		
	A7 EDGE CARD	A7 P1 - 15		A19 J7 - 15		AF ADD BUS 1		
	A7 EDGE CARD	A7 P1 - 16		A19 J7 - 16		SCOPE SWP CNTL 1		
	A7 EDGE CARD	A7 P1 - 17		A19 J7 - 17		AF ADD BUS 2		
	A7 EDGE CARD	A7 P1 - 18		A19 J7 - 18		SCOPE SWP CNTL 2		
	A7 EDGE CARD	A7 P1 - 19		A19 J7 - 19		AF ADD BUS 3		
	A7 EDGE CARD	A7 P1 - 20		A19 J7 - 20		SCOPE SWP CNTL 3		
	A7 EDGE CARD	A7 P1 - 21		A19 J7 - 21		NC		
	A7 EDGE CARD	A7 P1 - 22		A19 J7 - 22		$\overline{\text{CHAR GEN RST}}$		
	A7 EDGE CARD	A7 P1 - 23		A19 J7 - 23		NC		
	A7 EDGE CARD	A7 P1 - 24		A19 J7 - 24		NC		
	A7 EDGE CARD	A7 P1 - 25		A19 J7 - 25		NC		
	A7 EDGE CARD	A7 P1 - 26		A19 J7 - 26		NC		
	A7 EDGE CARD	A7 P1 - 27		A19 J7 - 27		SPECT ANA VERT		
	A7 EDGE CARD	A7 P1 - 28		A19 J7 - 28		NC		
	A7 EDGE CARD	A7 P1 - 29		A19 J7 - 29		AF DATA BUS 3		
	A7 EDGE CARD	A7 P1 - 30		A19 J7 - 30		NC		
	A7 EDGE CARD	A7 P1 - 31		A19 J7 - 31		AF DATA BUS 2		
	A7 EDGE CARD	A7 P1 - 32		A19 J7 - 32		NC		
	A7 EDGE CARD	A7 P1 - 33		A19 J7 - 33		AF DATA BUS 1		
	A7 EDGE CARD	A7 P1 - 34		A19 J7 - 34		NC		
	A7 EDGE CARD	A7 P1 - 35		A19 J7 - 35		AF DATA BUS 0		
	A7 EDGE CARD	A7 P1 - 36		A19 J7 - 36		NC		
	A7 EDGE CARD	A7 P1 - 37		A19 J7 - 37		NC		
	A7 EDGE CARD	A7 P1 - 38		A19 J7 - 38		ANT EN		
	A7 EDGE CARD	A7 P1 - 39		A19 J7 - 39		EXT HORIZ EN		
	A7 EDGE CARD	A7 P1 - 40		A19 J7 - 40		HORIZ TIME BASE EN		
	A7 EDGE CARD	A7 P1 - 41		A19 J7 - 41		NC		
	A7 EDGE CARD	A7 P1 - 42		A19 J7 - 42		NC		
	A7 EDGE CARD	A7 P1 - 43		A19 J7 - 43		NC		
	A7 EDGE CARD	A7 P1 - 44		A19 J7 - 44		$\overline{\text{LINE 1}}$		
	A7 EDGE CARD	A7 P1 - 45		A19 J7 - 45		+5V		
	A7 EDGE CARD	A7 P1 - 46		A19 J7 - 46		+5V		
	A7 EDGE CARD	A7 P1 - 47		A19 J7 - 47		−5V		
	A7 EDGE CARD	A7 P1 - 48		A19 J7 - 48		−5V		
	A7 EDGE CARD	A7 P1 - 49		A19 J7 - 49		+33V		
	A7 EDGE CARD	A7 P1 - 50		A19 J7 - 50		+33V		
	A7 EDGE CARD	A7 P1 - 51		A19 J7 - 51		+12V		
	A7 EDGE CARD	A7 P1 - 52		A19 J7 - 52		+12V		
	A7 EDGE CARD	A7 P1 - 53		A19 J7 - 53		−12V		
	A7 EDGE CARD	A7 P1 - 54		A19 J7 - 54		−12V		

Table 5-2g. System Wirelist – Scope/DVM Control Board (A7) (Cont)

1	2	3	4	5	6	7	8	9
WIRE NO.	COLOR SIZE AWG	WIRE RUNS FROM	NOTE OR VIEW	TO	NOTE OR VIEW	FUNCTION ROUTING REMARKS	APPROX LENGTH (INCHES)	USE FIND NO.
	A7 EDGE CARD	A7 P1 - 55		A19 J7 - 55		EXT FWD PWR		
	A7 EDGE CARD	A7 P1 - 56		A19 J7 - 56		+8V		
	A7 EDGE CARD	A7 P1 - 57		A19 J7 - 57		EXT RFL PWR		
	A7 EDGE CARD	A7 P1 - 58		A19 J7 - 58		−8V		
	A7 EDGE CARD	A7 P1 - 59		A19 J7 - 59		CARRIER + MOD LVL		
	A7 EDGE CARD	A7 P1 - 60		A19 J7 - 60		INT SCOPE TO RNG SW		
	A7 EDGE CARD	A7 P1 - 61		A19 J7 - 61		DISPERSION SWP RTN		
	A7 EDGE CARD	A7 P1 - 62		A19 J7 - 62		NC		
	A7 EDGE CARD	A7 P1 - 63		A19 J7 - 63		DISPERSION SWP		
	A7 EDGE CARD	A7 P1 - 64		A19 J7 - 64		NC		
	A7 EDGE CARD	A7 P1 - 65		A19 J7 - 65		VOL CNTL AUDIO RTN		
	A7 EDGE CARD	A7 P1 - 66		A19 J7 - 66		NC		
	A7 EDGE CARD	A7 P1 - 67		A19 J7 - 67		NC		
	A7 EDGE CARD	A7 P1 - 68		A19 J7 - 68		$\overline{\text{AF BUS EN 1}}$		
	A7 EDGE CARD	A7 P1 - 69		A19 J7 - 69		MOD CAL AUDIO		
	A7 EDGE CARD	A7 P1 - 70		A19 J7 - 70		NC		
	A7 EDGE CARD	A7 P1 - 71		A19 J7 - 71		NC		
	A7 EDGE CARD	A7 P1 - 72		A19 J7 - 72		INT SCOPE HORIZ		
	A7 EDGE CARD	A7 P1 - 73		A19 J7 - 73		NC		
	A7 EDGE CARD	A7 P1 - 74		A19 J7 - 74		VERT TO SCOPE AMP		
	A7 EDGE CARD	A7 P1 - 75		A19 J7 - 75		NC		
	A7 EDGE CARD	A7 P1 - 76		A19 J7 - 76		$\overline{\text{SYNC PRESENT}}$		
	A7 EDGE CARD	A7 P1 - 77		A19 J7 - 77		NC		
	A7 EDGE CARD	A7 P1 - 78		A19 J7 - 78		SIG STRENGTH VOLTAGE		
	A7 EDGE CARD	A7 P1 - 79		A19 J7 - 79		DEMOD CAL AUDIO		
	A7 EDGE CARD	A7 P1 - 80		A19 J7 - 80		HDST AUDIO		
	A7 EDGE CARD	A7 P1 - 81		A19 J7 - 81		SPKR AUDIO		
	A7 EDGE CARD	A7 P1 - 82		A19 J7 - 82		SPKR AUDIO		
	A7 EDGE CARD	A7 P1 - 83		A19 J7 - 83		HORIZ CHAR SYNC		
	A7 EDGE CARD	A7 P1 - 84		A19 J7 - 84		SCOPE MODE EN		
	A7 EDGE CARD	A7 P1 - 85		A19 J7 - 85		NC		
	A7 EDGE CARD	A7 P1 - 86		A19 J7 - 86		NC		
	A7 EDGE CARD	A7 P1 - 87		A19 J7 - 87		CHAR GEN Z - AXIS		
	A7 EDGE CARD	A7 P1 - 88		A19 J7 - 88		SWP BLANKING		
	A7 EDGE CARD	A7 P1 - 89		A19 J7 - 89		NC		
	A7 EDGE CARD	A7 P1 - 90		A19 J7 - 90		$\overline{\text{SCOPE Z - AXIS}}$		
	A7 EDGE CARD	A7 P1 - 91		A19 J7 - 91		700 KHZ IF		
	A7 EDGE CARD	A7 P1 - 92		A19 J7 - 92		GND		
	A7 EDGE CARD	A7 P1 - 93		A19 J7 - 93		NC		
	A7 EDGE CARD	A7 P1 - 94		A19 J7 - 94		NC		
	A7 EDGE CARD	A7 P1 - 95		A19 J7 - 95		100 HZ REF		
	A7 EDGE CARD	A7 P1 - 96		A19 J7 - 96		NC		
	A7 EDGE CARD	A7 P1 - 97		A19 J7 - 97		DC IN		
	A7 EDGE CARD	A7 P1 - 98		A19 J7 - 98		NC		
	A7 EDGE CARD	A7 P1 - 99		A19 J7 - 99		GND		
	A7 EDGE CARD	A7 P1 - 100		A19 J7 - 100		GND		
625	WHT TEF 24	A7 U1 - 1		A7 U3 - 8		JUMPER	2.125	
626	WHT TEF 24	A7 U13 - 10		A7 R41		JUMPER	2.75	

Table 5-2h. System Wirelist – Receiver Board (A8)

1	2	3	4	5	6	7	8	9
WIRE NO.	COLOR SIZE AWG	WIRE RUNS FROM	NOTE OR VIEW	TO	NOTE OR VIEW	FUNCTION ROUTING REMARKS	APPROX LENGTH (INCHES)	USE FIND NO.
	A8 EDGE CARD	A8 P1 - 1		A19 J8 - 1		GND		
	A8 EDGE CARD	A8 P1 - 2		A19 J8 - 2		GND		
	A8 EDGE CARD	A8 P1 - 3		A19 J8 - 3		NC		
	A8 EDGE CARD	A8 P1 - 4		A19 J8 - 4		NC		
	A8 EDGE CARD	A8 P1 - 5		A19 J8 - 5		NC		
	A8 EDGE CARD	A8 P1 - 6		A19 J8 - 6		NC		
	A8 EDGE CARD	A8 P1 - 7		A19 J8 - 7		NC		
	A8 EDGE CARD	A8 P1 - 8		A19 J8 - 8		NC		
	A8 EDGE CARD	A8 P1 - 9		A19 J8 - 9		NC		
	A8 EDGE CARD	A8 P1 - 10		A19 J8 - 10		NC		
	A8 EDGE CARD	A8 P1 - 11		A19 J8 - 11		GND		
	A8 EDGE CARD	A8 P1 - 12		A19 J8 - 12		GND		
	A8 EDGE CARD	A8 P1 - 13		A19 J8 - 13		GND		
	A8 EDGE CARD	A8 P1 - 14		A19 J8 - 14		GND		
	A8 EDGE CARD	A8 P1 - 15		A19 J8 - 15		SYNTH 10 MHZ		
	A8 EDGE CARD	A8 P1 - 16		A19 J8 - 16		NC		
	A8 EDGE CARD	A8 P1 - 17		A19 J8 - 17		SPECT ANA VERT		
	A8 EDGE CARD	A8 P1 - 18		A19 J8 - 18		NC		
	A8 EDGE CARD	A8 P1 - 19		A19 J8 - 19		SIG STRENGTH VOLTAGE		
	A8 EDGE CARD	A8 P1 - 20		A19 J8 - 20		NC		
	A8 EDGE CARD	A8 P1 - 21		A19 J8 - 21		NC		
	A8 EDGE CARD	A8 P1 - 22		A19 J8 - 22		NC		
	A8 EDGE CARD	A8 P1 - 23		A19 J8 - 23		NC		
	A8 EDGE CARD	A8 P1 - 24		A19 J8 - 24		NC		
	A8 EDGE CARD	A8 P1 - 25		A19 J8 - 25		NC		
	A8 EDGE CARD	A8 P1 - 26		A19 J8 - 26		NC		
	A8 EDGE CARD	A8 P1 - 27		A19 J8 - 27		BFO FREQ CNTL		
	A8 EDGE CARD	A8 P1 - 28		A19 J8 - 28		NC		
	A8 EDGE CARD	A8 P1 - 29		A19 J8 - 29		SQUELCH LEVEL		
	A8 EDGE CARD	A8 P1 - 30		A19 J8 - 30		NC		
	A8 EDGE CARD	A8 P1 - 31		A19 J8 - 31		+5V		
	A8 EDGE CARD	A8 P1 - 32		A19 J8 - 32		+5V		
	A8 EDGE CARD	A8 P1 - 33		A19 J8 - 33		−5V		
	A8 EDGE CARD	A8 P1 - 34		A19 J8 - 34		−5V		
	A8 EDGE CARD	A8 P1 - 35		A19 J8 - 35		NC		
	A8 EDGE CARD	A8 P1 - 36		A19 J8 - 36		NC		
	A8 EDGE CARD	A8 P1 - 37		A19 J8 - 37		+ 12V		
	A8 EDGE CARD	A8 P1 - 38		A19 J8 - 38		+ 12V		
	A8 EDGE CARD	A8 P1 - 39		A19 J8 - 39		− 12V		
	A8 EDGE CARD	A8 P1 - 40		A19 J8 - 40		− 12V		
	A8 EDGE CARD	A8 P1 - 41		A19 J8 - 41		NC		
	A8 EDGE CARD	A8 P1 - 42		A19 J8 - 42		NC		
	A8 EDGE CARD	A8 P1 - 43		A19 J8 - 43		NC		
	A8 EDGE CARD	A8 P1 - 44		A19 J8 - 44		NC		
	A8 EDGE CARD	A8 P1 - 45		A19 J8 - 45		SYS CNTL DATA		
	A8 EDGE CARD	A8 P1 - 46		A19 J8 - 46		NC		
	A8 EDGE CARD	A8 P1 - 47		A19 J8 - 47		DATA CLOCK		

Table 5-2h. System Wirelist – Receiver Board (A8) (Cont)

1	2	3	4	5	6	7	8	9
WIRE NO.	COLOR SIZE AWG	WIRE RUNS FROM	NOTE OR VIEW	TO	NOTE OR VIEW	FUNCTION ROUTING REMARKS	APPROX LENGTH (INCHES)	USE FIND NO.
	A8 EDGE CARD	A8 P1 - 48		A19 J8 - 48		NC		
	A8 EDGE CARD	A8 P1 - 49		A19 J8 - 49		DATA LATCH		
	A8 EDGE CARD	A8 P1 - 50		A19 J8 - 50		NC		
	A8 EDGE CARD	A8 P1 - 51		A19 J8 - 51		NC		
	A8 EDGE CARD	A8 P1 - 52		A19 J8 - 52		NC		
	A8 EDGE CARD	A8 P1 - 53		A19 J8 - 53		NC		
	A8 EDGE CARD	A8 P1 - 54		A19 J8 - 54		NC		
	A8 EDGE CARD	A8 P1 - 55		A19 J8 - 55		SYNTH CNTL DATA		
	A8 EDGE CARD	A8 P1 - 56		A19 J8 - 56		NC		
	A8 EDGE CARD	A8 P1 - 57		A19 J8 - 57		WB SIG PRES		
	A8 EDGE CARD	A8 P1 - 58		A19 J8 - 58		$\overline{\text{IF OVERLOAD}}$		
	A8 EDGE CARD	A8 P1 - 59		A19 J8 - 59		SIGNAL PRESENT		
	A8 EDGE CARD	A8 P1 - 60		A19 J8 - 60		SIG PRES LED		
	A8 EDGE CARD	A8 P1 - 61		A19 J8 - 61		NC		
	A8 EDGE CARD	A8 P1 - 62		A19 J8 - 62		VOL CONTL AUDIO		
	A8 EDGE CARD	A8 P1 - 63		A19 J8 - 63		NC		
	A8 EDGE CARD	A8 P1 - 64		A19 J8 - 64		DEMOD OUT		
	A8 EDGE CARD	A8 P1 - 65		A19 J8 - 65		IF/BFO FREQ		
	A8 EDGE CARD	A8 P1 - 66		A19 J8 - 66		NC		
	A8 EDGE CARD	A8 P1 - 67		A19 J8 - 67		DEMOD CAL AUDIO		
	A8 EDGE CARD	A8 P1 - 68		A19 J8 - 68		NC		
	A8 EDGE CARD	A8 P1 - 69		A19 J8 - 69		NC		
	A8 EDGE CARD	A8 P1 - 70		A19 J8 - 70		700 KHZ IF		
	A8 EDGE CARD	A8 P1 - 71		A19 J8 - 71		GND		
	A8 EDGE CARD	A8 P1 - 72		A19 J8 - 72		GND		
	COAX 30 - P22340E001	A8 J1		A17 J5		10.7 MHZ IF	14.00	W002
612	BARE BUS 26	A8 C389		A8 C389		JUMPER OUT C389	0.625	
613	WHT BUS 24	A8 Q104 - E		A8 R308			2.20	
614	WHT BUS 24	A8 U113 - 11		A8 U315 - 8			2.75	
615	WHT BUS 24	A8 U308 - 4		A8 R379			1.90	

Table 5-2i. System Wirelist–RF Synthesizer Module (A9)

1	2	3	4	5	6	7	8	9
WIRE NO.	COLOR SIZE AWG	WIRE RUNS FROM	NOTE OR VIEW	TO	NOTE OR VIEW	FUNCTION ROUTING REMARKS	APPROX LENGTH (INCHES)	USE FIND NO.
	A9 EDGE CARD	A9 P1 - 1		A19 J9 - 1		GND		
	A9 EDGE CARD	A9 P1 - 2		A19 J9 - 2		GND		
	A9 EDGE CARD	A9 P1 - 3		A19 J9 - 3		DATA CLOCK		
	A9 EDGE CARD	A9 P1 - 4		A19 J9 - 4		DATA CLOCK		
	A9 EDGE CARD	A9 P1 - 5		A19 J9 - 5		DATA LATCH		
	A9 EDGE CARD	A9 P1 - 6		A19 J9 - 6		DATA LATCH		

Table 5-2i. System Wirelist - RF Synthesizer Module (A9) (Cont)

1	2	3	4	5	6	7	8	9
WIRE NO.	COLOR SIZE AWG	WIRE RUNS FROM	NOTE OR VIEW	TO	NOTE OR VIEW	FUNCTION ROUTING REMARKS	APPROX LENGTH (INCHES)	USE FIND NO.
	A9 EDGE CARD	A9 P1 - 7		A19 J9 - 7		24 CNTL DATA		
	A9 EDGE CARD	A9 P1 - 8		A19 J9 - 8		24 CNTL DATA		
	A9 EDGE CARD	A9 P1 - 9		A19 J9 - 9		60.5 CNTL DATA		
	A9 EDGE CARD	A9 P1 - 10		A19 J9 - 10		60.5 CNTL DATA		
	A9 EDGE CARD	A9 P1 - 11		A19 J9 - 11		SYNTH CNTL DATA		
	A9 EDGE CARD	A9 P1 - 12		A19 J9 - 12		SYNTH CNTL DATA		
	A9 EDGE CARD	A9 P1 - 13		A19 J9 - 13		310 - 440 CNTL DATA		
	A9 EDGE CARD	A9 P1 - 14		A19 J9 - 14		310 - 440 CNTL DATA		
	A9 EDGE CARD	A9 P1 - 15		A19 J9 - 15		WB AMP LO/HI		
	A9 EDGE CARD	A9 P1 - 16		A19 J9 - 16		WB AMP LO/HI		
	A9 EDGE CARD	A9 P1 - 17		A19 J9 - 17		SYNTH 10 MHZ		
	A9 EDGE CARD	A9 P1 - 18		A19 J9 - 18		SYNTH 10 MHZ		
	A9 EDGE CARD	A9 P1 - 19		A19 J9 - 19		GND		
	A9 EDGE CARD	A9 P1 - 20		A19 J9 - 20		GND		
	A9 EDGE CARD	A9 P1 - 21		A19 J9 - 21		GND		
	A9 EDGE CARD	A9 P1 - 22		A19 J9 - 22		GND		
	A9 EDGE CARD	A9 P1 - 23		A19 J9 - 23		GND		
	A9 EDGE CARD	A9 P1 - 24		A19 J9 - 24		GND		
	A9 EDGE CARD	A9 P1 - 25		A19 J9 - 25		SYNTH SWEEP		
	A9 EDGE CARD	A9 P1 - 26		A19 J9 - 26		SYNTH SWEEP		
	A9 EDGE CARD	A9 P1 - 27		A19 J9 - 27		GND		
	A9 EDGE CARD	A9 P1 - 28		A19 J9 - 28		GND		
	A9 EDGE CARD	A9 P1 - 29		A19 J9 - 29		SYNTH FM		
	A9 EDGE CARD	A9 P1 - 30		A19 J9 - 30		SYNTH FM		
	A9 EDGE CARD	A9 P1 - 31		A19 J9 - 31		GND		
	A9 EDGE CARD	A9 P1 - 32		A19 J9 - 32		GND		
	A9 EDGE CARD	A9 P1 - 33		A19 J9 - 33		0.01 - 1 AGC		
	A9 EDGE CARD	A9 P1 - 34		A19 J9 - 34		0.01 - 1 AGC		
	A9 EDGE CARD	A9 P1 - 35		A19 J9 - 35		GND		
	A9 EDGE CARD	A9 P1 - 36		A19 J9 - 36		GND		
	A9 EDGE CARD	A9 P1 - 37		A19 J9 - 37		GND		
	A9 EDGE CARD	A9 P1 - 38		A19 J9 - 38		GND		
	A9 EDGE CARD	A9 P1 - 39		A19 J9 - 39		10 MHZ REF		
	A9 EDGE CARD	A9 P1 - 40		A19 J9 - 40		10 MHZ REF		
	A9 EDGE CARD	A9 P1 - 41		A19 J9 - 41		GND		
	A9 EDGE CARD	A9 P1 - 42		A19 J9 - 42		GND		
	A9 EDGE CARD	A9 P1 - 43		A19 J9 - 43		+5V		
	A9 EDGE CARD	A9 P1 - 44		A19 J9 - 44		+5V		
	A9 EDGE CARD	A9 P1 - 45		A19 J9 - 45		−5V TO SYNTH		
	A9 EDGE CARD	A9 P1 - 46		A19 J9 - 46		−5V TO SYNTH		
	A9 EDGE CARD	A9 P1 - 47		A19 J9 - 47		+33V		
	A9 EDGE CARD	A9 P1 - 48		A19 J9 - 48		+33V		
	A9 EDGE CARD	A9 P1 - 49		A19 J9 - 49		+12V		
	A9 EDGE CARD	A9 P1 - 50		A19 J9 - 50		+12V		
	A9 EDGE CARD	A9 P1 - 51		A19 J9 - 51		−12V		
	A9 EDGE CARD	A9 P1 - 52		A19 J9 - 52		−12V		
	A9 EDGE CARD	A9 P1 - 53		A19 J9 - 53		GND		

Table 5-2i. System Wirelist - RF Synthesizer Module (A9) (Cont)

1	2	3	4	5	6	7	8	9
WIRE NO.	COLOR SIZE AWG	WIRE RUNS FROM	NOTE OR VIEW	TO	NOTE OR VIEW	FUNCTION ROUTING REMARKS	APPROX LENGTH (INCHES)	USE FIND NO.
	A9 EDGE CARD	A9 P1 - 54		A19 J9 - 54		GND		
	A9 EDGE CARD	A9 P1 - 55		A19 J9 - 55		GND		
	A9 EDGE CARD	A9 P1 - 56		A19 J9 - 56		GND		
	A9 EDGE CARD	A9 P1 - 57		A19 J9 - 57		GND		
	A9 EDGE CARD	A9 P1 - 58		A19 J9 - 58		GND		
	A9 EDGE CARD	A9 P1 - 59		A19 J9 - 59		GND		
	A9 EDGE CARD	A9 P1 - 60		A19 J9 - 60		GND		
	A9 EDGE CARD	A9 P1 - 61		A19 J9 - 61		GND		
	A9 EDGE CARD	A9 P1 - 62		A19 J9 - 62		GND		
	A9 EDGE CARD	A9 P1 - 63		A19 J9 - 63		GND		
	A9 EDGE CARD	A9 P1 - 64		A19 J9 - 64		GND		
	A9 EDGE CARD	A9 P1 - 65		A19 J9 - 65		GND		
	A9 EDGE CARD	A9 P1 - 66		A19 J9 - 66		GND		
	A9 EDGE CARD	A9 P1 - 67		A19 J9 - 67		GND		
	A9 EDGE CARD	A9 P1 - 68		A19 J9 - 68		GND		
	A9 EDGE CARD	A9 P1 - 69		A19 J9 - 69		GND		
	A9 EDGE CARD	A9 P1 - 70		A19 J9 - 70		GND		
	A9 EDGE CARD	A9 P1 - 71		A19 J9 - 71		GND		
	A9 EDGE CARD	A9 P1 - 72		A19 J9 - 72		GND		
W3	COAX ASSEMBLY	A9 J1		A17 J4		SYNTH RF		W003

Table 5-2j. System Wirelist – Audio Synthesizer Board (A10)

1	2	3	4	5	6	7	8	9
WIRE NO.	COLOR SIZE AWG	WIRE RUNS FROM	NOTE OR VIEW	TO	NOTE OR VIEW	FUNCTION ROUTING REMARKS	APPROX LENGTH (INCHES)	USE FIND NO.
	A10 EDGE CARD	A10 P1 - 1		A19 J10 - 1		GND		
	A10 EDGE CARD	A10 P1 - 2		A19 J10 - 2		GND		
	A10 EDGE CARD	A10 P1 - 3		A19 J10 - 3		AF ADD BUS 0		
	A10 EDGE CARD	A10 P1 - 4		A19 J10 - 4		AF ADD BUS 0		
	A10 EDGE CARD	A10 P1 - 5		A19 J10 - 5		AF ADD BUS 1		
	A10 EDGE CARD	A10 P1 - 6		A19 J10 - 6		AF ADD BUS 1		
	A10 EDGE CARD	A10 P1 - 7		A19 J10 - 7		AF ADD BUS 2		
	A10 EDGE CARD	A10 P1 - 8		A19 J10 - 8		AF ADD BUS 2		
	A10 EDGE CARD	A10 P1 - 9		A19 J10 - 9		AF ADD BUS 3		
	A10 EDGE CARD	A10 P1 - 10		A19 J10 - 10		AF ADD BUS 3		
	A10 EDGE CARD	A10 P1 - 11		A19 J10 - 11		MIC INPUT		
	A10 EDGE CARD	A10 P1 - 12		A19 J10 - 12		MIC INPUT		
	A10 EDGE CARD	A10 P1 - 13		A19 J10 - 13		EXT MOD IN		
	A10 EDGE CARD	A10 P1 - 14		A19 J10 - 14		EXT MOD IN		
	A10 EDGE CARD	A10 P1 - 15		A19 J10 - 15		AF DATA BUS 3		
	A10 EDGE CARD	A10 P1 - 16		A19 J10 - 16		AF DATA BUS 3		

Table 5-2j. System Wirelist – Audio Synthesizer Board (A10) (Cont)

1	2	3	4	5	6	7	8	9
WIRE NO.	COLOR SIZE AWG	WIRE RUNS FROM	NOTE OR VIEW	TO	NOTE OR VIEW	FUNCTION ROUTING REMARKS	APPROX LENGTH (INCHES)	USE FIND NO.
	A10 EDGE CARD	A10 P1 - 17		A19 J10 - 17		AF DATA BUS 2		
	A10 EDGE CARD	A10 P1 - 18		A19 J10 - 18		AF DATA BUS 2		
	A10 EDGE CARD	A10 P1 - 19		A19 J10 - 19		AF DATA BUS 1		
	A10 EDGE CARD	A10 P1 - 20		A19 J10 - 20		AF DATA BUS 1		
	A10 EDGE CARD	A10 P1 - 21		A19 J10 - 21		AF DATA BUS 0		
	A10 EDGE CARD	A10 P1 - 22		A19 J10 - 22		AF DATA BUS 0		
	A10 EDGE CARD	A10 P1 - 23		A19 J10 - 23		EXT MOD (I)		
	A10 EDGE CARD	A10 P1 - 24		A19 J10 - 24		EXT MOD (I)		
	A10 EDGE CARD	A10 P1 - 25		A19 J10 - 25		INT MOD (I)		
	A10 EDGE CARD	A10 P1 - 26		A19 J10 - 26		INT MOD (I)		
	A10 EDGE CARD	A10 P1 - 27		A19 J10 - 27		$\overline{\text{AF BUS EN 1}}$		
	A10 EDGE CARD	A10 P1 - 28		A19 J10 - 28		$\overline{\text{AF BUS EN 1}}$		
	A10 EDGE CARD	A10 P1 - 29		A19 J10 - 29		BINARY MOD		
	A10 EDGE CARD	A10 P1 - 30		A19 J10 - 30		NC		
	A10 EDGE CARD	A10 P1 - 31		A19 J10 - 31		+5V		
	A10 EDGE CARD	A10 P1 - 32		A19 J10 - 32		+5V		
	A10 EDGE CARD	A10 P1 - 33		A19 J10 - 33		−5V		
	A10 EDGE CARD	A10 P1 - 34		A19 J10 - 34		−5V		
	A10 EDGE CARD	A10 P1 - 35		A19 J10 - 35		+33V		
	A10 EDGE CARD	A10 P1 - 36		A19 J10 - 36		+33V		
	A10 EDGE CARD	A10 P1 - 37		A19 J10 - 37		+12V		
	A10 EDGE CARD	A10 P1 - 38		A19 J10 - 38		+12V		
	A10 EDGE CARD	A10 P1 - 39		A19 J10 - 39		−12V		
	A10 EDGE CARD	A10 P1 - 40		A19 J10 - 40		−12V		
	A10 EDGE CARD	A10 P1 - 41		A19 J10 - 41		SYNTH 1 KHZ		
	A10 EDGE CARD	A10 P1 - 42		A19 J10 - 42		SYNTH 1 KHZ		
	A10 EDGE CARD	A10 P1 - 43		A19 J10 - 43		FP MOD OUT		
	A10 EDGE CARD	A10 P1 - 44		A19 J10 - 44		FP MOD OUT		
	A10 EDGE CARD	A10 P1 - 45		A19 J10 - 45		1 KHZ SINE (I)		
	A10 EDGE CARD	A10 P1 - 46		A19 J10 - 46		1 KHZ SINE (I)		
	A10 EDGE CARD	A10 P1 - 47		A19 J10 - 47		VOL CNTL AUDIO		
	A10 EDGE CARD	A10 P1 - 48		A19 J10 - 48		VOL CNTL AUDIO		
	A10 EDGE CARD	A10 P1 - 49		A19 J10 - 49		MOD CAL AUDIO		
	A10 EDGE CARD	A10 P1 - 50		A19 J10 - 50		MOD CAL AUDIO		
	A10 EDGE CARD	A10 P1 - 51		A19 J10 - 51		DSBSC MOD		
	A10 EDGE CARD	A10 P1 - 52		A19 J10 - 52		DSBSC MOD		
	A10 EDGE CARD	A10 P1 - 53		A19 J10 - 53		NC		
	A10 EDGE CARD	A10 P1 - 54		A19 J10 - 54		NC		
	A10 EDGE CARD	A10 P1 - 55		A19 J10 - 55		SYNTH FM		
	A10 EDGE CARD	A10 P1 - 56		A19 J10 - 56		SYNTH FM		
	A10 EDGE CARD	A10 P1 - 57		A19 J10 - 57		NC		
	A10 EDGE CARD	A10 P1 - 58		A19 J10 - 58		NC		
	A10 EDGE CARD	A10 P1 - 59		A19 J10 - 59		OFFSET MOD		
	A10 EDGE CARD	A10 P1 - 60		A19 J10 - 60		OFFSET MOD		
	A10 EDGE CARD	A10 P1 - 61		A19 J10 - 61		5 VDC + AM MOD		
	A10 EDGE CARD	A10 P1 - 62		A19 J10 - 62		5 VDC + AM MOD		
	A10 EDGE CARD	A10 P1 - 63		A19 J10 - 63		INT MOD RTN		

Table 5-2j. System Wirelist – Audio Synthesizer Board (A10) (Cont)

1	2	3	4	5	6	7	8	9
WIRE NO.	COLOR SIZE AWG	WIRE RUNS FROM	NOTE OR VIEW	TO	NOTE OR VIEW	FUNCTION ROUTING REMARKS	APPROX LENGTH (INCHES)	USE FIND NO.
	A10 EDGE CARD	A10 P1 - 64		A19 J10 - 64		INT MOD RTN		
	A10 EDGE CARD	A10 P1 - 65		A19 J10 - 65		EXT MOD RTN		
	A10 EDGE CARD	A10 P1 - 66		A19 J10 - 66		EXT MOD RTN		
	A10 EDGE CARD	A10 P1 - 67		A19 J10 - 67		1 KHZ SINE RTN		
	A10 EDGE CARD	A10 P1 - 68		A19 J10 - 68		1 KHZ SINE RTN		
	A10 EDGE CARD	A10 P1 - 69		A19 J10 - 69		NC		
	A10 EDGE CARD	A10 P1 - 70		A19 J10 - 70		NC		
	A10 EDGE CARD	A10 P1 - 71		A19 J10 - 71		GND		
	A10 EDGE CARD	A10 P1 - 72		A19 J10 - 72		GND		

Table 5-2k. System Wirelist – Processor Interface Board (A11)

1	2	3	4	5	6	7	8	9
WIRE NO.	COLOR SIZE AWG	WIRE RUNS FROM	NOTE OR VIEW	TO	NOTE OR VIEW	FUNCTION ROUTING REMARKS	APPROX LENGTH (INCHES)	USE FIND NO.
	A11 EDGE CARD	A11 P1 - 1		A19 J11 - 1		GND		
	A11 EDGE CARD	A11 P1 - 2		A19 J11 - 2		GND		
	A11 EDGE CARD	A11 P1 - 3		A19 J11 - 3		EXT DVM TO A/D		
	A11 EDGE CARD	A11 P1 - 4		A19 J11 - 4		DVM GND		
	A11 EDGE CARD	A11 P1 - 5		A19 J11 - 5		INT DVM TO A/D		
	A11 EDGE CARD	A11 P1 - 6		A19 J11 - 6		NC		
	A11 EDGE CARD	A11 P1 - 7		A19 J11 - 7		NC		
	A11 EDGE CARD	A11 P1 - 8		A19 J11 - 8		SYNTH 10 MHZ		
	A11 EDGE CARD	A11 P1 - 9		A19 J11 - 9		NC		
	A11 EDGE CARD	A11 P1 - 10		A19 J11 - 10		NC		
	A11 EDGE CARD	A11 P1 - 11		A19 J11 - 11		SYNTH 1 KHZ		
	A11 EDGE CARD	A11 P1 - 12		A19 J11 - 12		GND		
	A11 EDGE CARD	A11 P1 - 13		A19 J11 - 13		AF ADD BUS 0		
	A11 EDGE CARD	A11 P1 - 14		A19 J11 - 14		NC		
	A11 EDGE CARD	A11 P1 - 15		A19 J11 - 15		AF ADD BUS 1		
	A11 EDGE CARD	A11 P1 - 16		A19 J11 - 16		GND		
	A11 EDGE CARD	A11 P1 - 17		A19 J11 - 17		AF ADD BUS 2		
	A11 EDGE CARD	A11 P1 - 18		A19 J11 - 18		NC		
	A11 EDGE CARD	A11 P1 - 19		A19 J11 - 19		AF ADD BUS 3		
	A11 EDGE CARD	A11 P1 - 20		A19 J11 - 20		NC		
	A11 EDGE CARD	A11 P1 - 21		A19 J11 - 21		NC		
	A11 EDGE CARD	A11 P1 - 22		A19 J11 - 22		NC		
	A11 EDGE CARD	A11 P1 - 23		A19 J11 - 23		NC		
	A11 EDGE CARD	A11 P1 - 24		A19 J11 - 24		NC		
	A11 EDGE CARD	A11 P1 - 25		A19 J11 - 25		NC		
	A11 EDGE CARD	A11 P1 - 26		A19 J11 - 26		NC		

Table 5-2k. System Wirelist – Processor Interface Board (A11) (Cont)

1	2	3	4	5	6	7	8	9
WIRE NO.	COLOR SIZE AWG	WIRE RUNS FROM	NOTE OR VIEW	TO	NOTE OR VIEW	FUNCTION ROUTING REMARKS	APPROX LENGTH (INCHES)	USE FIND NO.
	A11 EDGE CARD	A11 P1 - 27		A19 J11 - 27		NC		
	A11 EDGE CARD	A11 P1 - 28		A19 J11 - 28		NC		
	A11 EDGE CARD	A11 P1 - 29		A19 J11 - 29		AF DATA BUS 3		
	A11 EDGE CARD	A11 P1 - 30		A19 J11 - 30		AF DATA BUS 3		
	A11 EDGE CARD	A11 P1 - 31		A19 J11 - 31		AF DATA BUS 2		
	A11 EDGE CARD	A11 P1 - 32		A19 J11 - 32		AF DATA BUS 2		
	A11 EDGE CARD	A11 P1 - 33		A19 J11 - 33		AF DATA BUS 1		
	A11 EDGE CARD	A11 P1 - 34		A19 J11 - 34		AF DATA BUS 1		
	A11 EDGE CARD	A11 P1 - 35		A19 J11 - 35		AF DATA BUS 0		
	A11 EDGE CARD	A11 P1 - 36		A19 J11 - 36		AF DATA BUS 0		
	A11 EDGE CARD	A11 P1 - 37		A19 J11 - 37		24 CNTL DATA		
	A11 EDGE CARD	A11 P1 - 38		A19 J11 - 38		24 CNTL DATA		
	A11 EDGE CARD	A11 P1 - 39		A19 J11 - 39		60.5 CNTL DATA		
	A11 EDGE CARD	A11 P1 - 40		A19 J11 - 40		60.5 CNTL DATA		
	A11 EDGE CARD	A11 P1 - 41		A19 J11 - 41		SYS CNTL DATA		
	A11 EDGE CARD	A11 P1 - 42		A19 J11 - 42		SYS CNTL DATA		
	A11 EDGE CARD	A11 P1 - 43		A19 J11 - 43		DATA LATCH		
	A11 EDGE CARD	A11 P1 - 44		A19 J11 - 44		DATA LATCH		
	A11 EDGE CARD	A11 P1 - 45		A19 J11 - 45		+5V		
	A11 EDGE CARD	A11 P1 - 46		A19 J11 - 46		+5V		
	A11 EDGE CARD	A11 P1 - 47		A19 J11 - 47		−5V		
	A11 EDGE CARD	A11 P1 - 48		A19 J11 - 48		−5V		
	A11 EDGE CARD	A11 P1 - 49		A19 J11 - 49		DATA CLOCK		
	A11 EDGE CARD	A11 P1 - 50		A19 J11 - 50		PA 0		
	A11 EDGE CARD	A11 P1 - 51		A19 J11 - 51		+12V		
	A11 EDGE CARD	A11 P1 - 52		A19 J11 - 52		+12V		
	A11 EDGE CARD	A11 P1 - 53		A19 J11 - 53		−12V		
	A11 EDGE CARD	A11 P1 - 54		A19 J11 - 54		−12V		
	A11 EDGE CARD	A11 P1 - 55		A19 J11 - 55		NC		
	A11 EDGE CARD	A11 P1 - 56		A19 J11 - 56		OFFSET DATA		
	A11 EDGE CARD	A11 P1 - 57		A19 J11 - 57		310 - 440 CNTL DATA		
	A11 EDGE CARD	A11 P1 - 58		A19 J11 - 58		$\overline{\text{NMI}}$		
	A11 EDGE CARD	A11 P1 - 59		A19 J11 - 59		NC		
	A11 EDGE CARD	A11 P1 - 60		A19 J11 - 60		INT FREQ CNTR		
	A11 EDGE CARD	A11 P1 - 61		A19 J11 - 61		EXT FREQ CNTR		
	A11 EDGE CARD	A11 P1 - 62		A19 J11 - 62		NC		
	A11 EDGE CARD	A11 P1 - 63		A19 J11 - 63		$\overline{\text{EXT FREQ CNTR}}$		
	A11 EDGE CARD	A11 P1 - 64		A19 J11 - 64		NC		
	A11 EDGE CARD	A11 P1 - 65		A19 J11 - 65		IF/BFO FREQ		
	A11 EDGE CARD	A11 P1 - 66		A19 J11 - 66		NC		
	A11 EDGE CARD	A11 P1 - 67		A19 J11 - 67		100 HZ REF		
	A11 EDGE CARD	A11 P1 - 68		A19 J11 - 68		$\overline{\text{AF BUS EN 2}}$		
	A11 EDGE CARD	A11 P1 - 69		A19 J11 - 69		$\overline{\text{RESET}}$		
	A11 EDGE CARD	A11 P1 - 70		A19 J11 - 70		$\overline{\text{IRQ}}$		
	A11 EDGE CARD	A11 P1 - 71		A19 J11 - 71		A1		
	A11 EDGE CARD	A11 P1 - 72		A19 J11 - 72		A0		
	A11 EDGE CARD	A11 P1 - 73		A19 J11 - 73		A3		

Table 5-2k. System Wirelist – Processor Interface Board (A11) (Cont)

1	2	3	4	5	6	7	8	9
WIRE NO.	COLOR SIZE AWG	WIRE RUNS FROM	NOTE OR VIEW	TO	NOTE OR VIEW	FUNCTION ROUTING REMARKS	APPROX LENGTH (INCHES)	USE FIND NO.
	A11 EDGE CARD	A11 P1 - 74		A19 J11 - 74		A2		
	A11 EDGE CARD	A11 P1 - 75		A19 J11 - 75		A5		
	A11 EDGE CARD	A11 P1 - 76		A19 J11 - 76		A4		
	A11 EDGE CARD	A11 P1 - 77		A19 J11 - 77		A7		
	A11 EDGE CARD	A11 P1 - 78		A19 J11 - 78		A6		
	A11 EDGE CARD	A11 P1 - 79		A19 J11 - 79		A9		
	A11 EDGE CARD	A11 P1 - 80		A19 J11 - 80		A8		
	A11 EDGE CARD	A11 P1 - 81		A19 J11 - 81		A11		
	A11 EDGE CARD	A11 P1 - 82		A19 J11 - 82		A10		
	A11 EDGE CARD	A11 P1 - 83		A19 J11 - 83		A13		
	A11 EDGE CARD	A11 P1 - 84		A19 J11 - 84		A12		
	A11 EDGE CARD	A11 P1 - 85		A19 J11 - 85		A15		
	A11 EDGE CARD	A11 P1 - 86		A19 J11 - 86		A14		
	A11 EDGE CARD	A11 P1 - 87		A19 J11 - 87		$\overline{\text{I/O EN}}$		
	A11 EDGE CARD	A11 P1 - 88		A19 J11 - 88		E		
	A11 EDGE CARD	A11 P1 - 89		A19 J11 - 89		Q		
	A11 EDGE CARD	A11 P1 - 90		A19 J11 - 90		R/$\overline{\text{W}}$		
	A11 EDGE CARD	A11 P1 - 91		A19 J11 - 91		D1		
	A11 EDGE CARD	A11 P1 - 92		A19 J11 - 92		D0		
	A11 EDGE CARD	A11 P1 - 93		A19 J11 - 93		D3		
	A11 EDGE CARD	A11 P1 - 94		A19 J11 - 94		D2		
	A11 EDGE CARD	A11 P1 - 95		A19 J11 - 95		D5		
	A11 EDGE CARD	A11 P1 - 96		A19 J11 - 96		D4		
	A11 EDGE CARD	A11 P1 - 97		A19 J11 - 97		D7		
	A11 EDGE CARD	A11 P1 - 98		A19 J11 - 98		D6		
	A11 EDGE CARD	A11 P1 - 99		A19 J11 - 99		GND		
	A11 EDGE CARD	A11 P1 - 100		A19 J11 - 100		GND		

Table 5 – 2l. System Wirelist – Cellular Radio Option Board (A12)

1	2	3	4	5	6	7	8	9
WIRE NO.	COLOR SIZE AWG	WIRE RUNS FROM	NOTE OR VIEW	TO	NOTE OR VIEW	FUNCTION ROUTING REMARKS	APPROX LENGTH (INCHES)	USE FIND NO.
	A12 EDGE CARD	A12 P1 - 1		A19 J12 - 1		GND		
	A12 EDGE CARD	A12 P1 - 2		A19 J12 - 2		GND		
	A12 EDGE CARD	A12 P1 - 3		A19 J12 - 3		AM MOD + DC REF (I)		
	A12 EDGE CARD	A12 P1 - 4		A19 J12 - 4		AM MOD + DC REF (O)		
	A12 EDGE CARD	A12 P1 - 5		A19 J12 - 5		OPT A ENABLE		
	A12 EDGE CARD	A12 P1 - 6		A19 J12 - 6		5 VDC + AM MOD		
	A12 EDGE CARD	A12 P1 - 7		A19 J12 - 7		NC		
	A12 EDGE CARD	A12 P1 - 8		A19 J12 - 8		NC		

Table 5 – 2l. System Wirelist – Cellular Radio Option Board (A12) (Cont)

1	2	3	4	5	6	7	8	9
WIRE NO.	COLOR SIZE AWG	WIRE RUNS FROM	NOTE OR VIEW	TO	NOTE OR VIEW	FUNCTION ROUTING REMARKS	APPROX LENGTH (INCHES)	USE FIND NO.
	A12 EDGE CARD	A12 P1 - 9		A19 J12 - 9		NC		
	A12 EDGE CARD	A12 P1 - 10		A19 J12 - 10		NC		
	A12 EDGE CARD	A12 P1 - 11		A19 J12 - 11		NC		
	A12 EDGE CARD	A12 P1 - 12		A19 J12 - 12		NC		
	A12 EDGE CARD	A12 P1 - 13		A19 J12 - 13		MIC INPUT		
	A12 EDGE CARD	A12 P1 - 14		A19 J12 - 14		NC		
	A12 EDGE CARD	A12 P1 - 15		A19 J12 - 15		EXT MOD INPUT		
	A12 EDGE CARD	A12 P1 - 16		A19 J12 - 16		NC		
	A12 EDGE CARD	A12 P1 - 17		A19 J12 - 17		NC		
	A12 EDGE CARD	A12 P1 - 18		A19 J12 - 18		NC		
	A12 EDGE CARD	A12 P1 - 19		A19 J12 - 19		DEMOD CAL AUDIO		
	A12 EDGE CARD	A12 P1 - 20		A19 J12 - 20		POWER ON		
	A12 EDGE CARD	A12 P1 - 21		A19 J12 - 21		NC		
	A12 EDGE CARD	A12 P1 - 22		A19 J12 - 22		VOL CNTL AUDIO		
	A12 EDGE CARD	A12 P1 - 23		A19 J12 - 23		$\overline{\text{ROM-P7}}$		
	A12 EDGE CARD	A12 P1 - 24		A19 J12 - 24		$\overline{\text{ROM-P6}}$		
	A12 EDGE CARD	A12 P1 - 25		A19 J12 - 25		NC		
	A12 EDGE CARD	A12 P1 - 26		A19 J12 - 26		$\overline{\text{ROM-P10}}$		
	A12 EDGE CARD	A12 P1 - 27		A19 J12 - 27		NC		
	A12 EDGE CARD	A12 P1 - 28		A19 J12 - 28		1 KHZ SINE (I)		
	A12 EDGE CARD	A12 P1 - 29		A19 J12 - 29		1 KHZ SINE RTN (I)		
	A12 EDGE CARD	A12 P1 - 30		A19 J12 - 30		1 KHZ SINE RTN (O)		
	A12 EDGE CARD	A12 P1 - 31		A19 J12 - 31		1 KHZ SINE RTN		
	A12 EDGE CARD	A12 P1 - 32		A19 J12 - 32		$\overline{\text{ROM-P5}}$		
	A12 EDGE CARD	A12 P1 - 33		A19 J12 - 33		$\overline{\text{ROM-P8}}$		
	A12 EDGE CARD	A12 P1 - 34		A19 J12 - 34		EXT MOD (I)		
	A12 EDGE CARD	A12 P1 - 35		A19 J12 - 35		EXT MOD RTN (I)		
	A12 EDGE CARD	A12 P1 - 36		A19 J12 - 36		EXT MOD RTN (O)		
	A12 EDGE CARD	A12 P1 - 37		A19 J12 - 37		EXT MOD RTN		
	A12 EDGE CARD	A12 P1 - 38		A19 J12 - 38		NC		
	A12 EDGE CARD	A12 P1 - 39		A19 J12 - 39		NC		
	A12 EDGE CARD	A12 P1 - 40		A19 J12 - 40		INT MOD (I)		
	A12 EDGE CARD	A12 P1 - 41		A19 J12 - 41		INT MOD RTN (I)		
	A12 EDGE CARD	A12 P1 - 42		A19 J12 - 42		INT MOD RTN (O)		
	A12 EDGE CARD	A12 P1 - 43		A19 J12 - 43		INT MOD RTN		
	A12 EDGE CARD	A12 P1 - 44		A19 J12 - 44		INT SCOPE TO RNG SW		
	A12 EDGE CARD	A12 P1 - 45		A19 J12 - 45		+5V		
	A12 EDGE CARD	A12 P1 - 46		A19 J12 - 46		+5V		
	A12 EDGE CARD	A12 P1 - 47		A19 J12 - 47		−5V		
	A12 EDGE CARD	A12 P1 - 48		A19 J12 - 48		−5V		
	A12 EDGE CARD	A12 P1 - 49		A19 J12 - 49		+33V		
	A12 EDGE CARD	A12 P1 - 50		A19 J12 - 50		+33V		
	A12 EDGE CARD	A12 P1 - 51		A19 J12 - 51		+12V		
	A12 EDGE CARD	A12 P1 - 52		A19 J12 - 52		+12V		
	A12 EDGE CARD	A12 P1 - 53		A19 J12 - 53		−12V		
	A12 EDGE CARD	A12 P1 - 54		A19 J12 - 54		−12V		
	A12 EDGE CARD	A12 P1 - 55		A19 J12 - 55		INT FREQ CNTR		

Table 5 – 21. System Wirelist – Cellular Radio Option Board (A12) (Cont)

1	2	3	4	5	6	7	8	9
WIRE NO.	COLOR SIZE AWG	WIRE RUNS FROM	NOTE OR VIEW	TO	NOTE OR VIEW	FUNCTION ROUTING REMARKS	APPROX LENGTH (INCHES)	USE FIND NO.
	A12 EDGE CARD	A12 P1 – 56		A19 J12 – 56		V_{pp}		
	A12 EDGE CARD	A12 P1 – 57		A19 J12 – 57		$\overline{PGM}$		
	A12 EDGE CARD	A12 P1 – 58		A19 J12 – 58		$\overline{NMI}$		
	A12 EDGE CARD	A12 P1 – 59		A19 J12 – 59		$\overline{ROM\text{-}P3}$		
	A12 EDGE CARD	A12 P1 – 60		A19 J12 – 60		$\overline{ROM\text{-}P1}$		
	A12 EDGE CARD	A12 P1 – 61		A19 J12 – 61		$\overline{ROM\text{-}P0}$		
	A12 EDGE CARD	A12 P1 – 62		A19 J12 – 62		$\overline{ROM\text{-}P14}$		
	A12 EDGE CARD	A12 P1 – 63		A19 J12 – 63		$\overline{ROM\text{-}P15}$		
	A12 EDGE CARD	A12 P1 – 64		A19 J12 – 64		$\overline{FIRQ}$		
	A12 EDGE CARD	A12 P1 – 65		A19 J12 – 65		$\overline{ROM\text{-}P12}$		
	A12 EDGE CARD	A12 P1 – 66		A19 J12 – 66		$\overline{XRAM}$		
	A12 EDGE CARD	A12 P1 – 67		A19 J12 – 67		$\overline{ROM\text{-}P11}$		
	A12 EDGE CARD	A12 P1 – 68		A19 J12 – 68		$\overline{ROM\text{-}P9}$		
	A12 EDGE CARD	A12 P1 – 69		A19 J12 – 69		$\overline{RESET}$		
	A12 EDGE CARD	A12 P1 – 70		A19 J12 – 70		$\overline{IRQ}$		
	A12 EDGE CARD	A12 P1 – 71		A19 J12 – 71		A1		
	A12 EDGE CARD	A12 P1 – 72		A19 J12 – 72		A0		
	A12 EDGE CARD	A12 P1 – 73		A19 J12 – 73		A3		
	A12 EDGE CARD	A12 P1 – 74		A19 J12 – 74		A2		
	A12 EDGE CARD	A12 P1 – 75		A19 J12 – 75		A5		
	A12 EDGE CARD	A12 P1 – 76		A19 J12 – 76		A4		
	A12 EDGE CARD	A12 P1 – 77		A19 J12 – 77		A7		
	A12 EDGE CARD	A12 P1 – 78		A19 J12 – 78		A6		
	A12 EDGE CARD	A12 P1 – 79		A19 J12 – 79		A9		
	A12 EDGE CARD	A12 P1 – 80		A19 J12 – 80		A8		
	A12 EDGE CARD	A12 P1 – 81		A19 J12 – 81		A11		
	A12 EDGE CARD	A12 P1 – 82		A19 J12 – 82		A10		
	A12 EDGE CARD	A12 P1 – 83		A19 J12 – 83		A13		
	A12 EDGE CARD	A12 P1 – 84		A19 J12 – 84		A12		
	A12 EDGE CARD	A12 P1 – 85		A19 J12 – 85		A15		
	A12 EDGE CARD	A12 P1 – 86		A19 J12 – 86		A14		
	A12 EDGE CARD	A12 P1 – 87		A19 J12 – 87		$\overline{I/O\ EN}$		
	A12 EDGE CARD	A12 P1 – 88		A19 J12 – 88		E		
	A12 EDGE CARD	A12 P1 – 89		A19 J12 – 89		Q		
	A12 EDGE CARD	A12 P1 – 90		A19 J12 – 90		R/$\overline{W}$		
	A12 EDGE CARD	A12 P1 – 91		A19 J12 – 91		D1		
	A12 EDGE CARD	A12 P1 – 92		A19 J12 – 92		D0		
	A12 EDGE CARD	A12 P1 – 93		A19 J12 – 93		D3		
	A12 EDGE CARD	A12 P1 – 94		A19 J12 – 94		D2		
	A12 EDGE CARD	A12 P1 – 95		A19 J12 – 95		D5		
	A12 EDGE CARD	A12 P1 – 96		A19 J12 – 96		D4		
	A12 EDGE CARD	A12 P1 – 97		A19 J12 – 97		D7		
	A12 EDGE CARD	A12 P1 – 98		A19 J12 – 98		D6		
	A12 EDGE CARD	A12 P1 – 99		A19 J12 – 99		GND		
	A12 EDGE CARD	A12 P1 – 100		A19 J12 – 100		GND		

Table 5-2m. System Wirelist – IEEE Interface Option Board (A13)

1	2	3	4	5	6	7	8	9
WIRE NO.	COLOR SIZE AWG	WIRE RUNS FROM	NOTE OR VIEW	TO	NOTE OR VIEW	FUNCTION ROUTING REMARKS	APPROX LENGTH (INCHES)	USE FIND NO.
	A13 EDGE CARD	A13 P1 - 1		A19 J13 - 1		GND		
	A13 EDGE CARD	A13 P1 - 2		A19 J13 - 2		GND		
	A13 EDGE CARD	A13 P1 - 3		A19 J13 - 3		AM MOD + DC REF (I)		
	A13 EDGE CARD	A13 P1 - 4		A19 J13 - 4		AM MOD + DC REF (O)		
	A13 EDGE CARD	A13 P1 - 5		A19 J13 - 5		OPT B ENABLE		
	A13 EDGE CARD	A13 P1 - 6		A19 J13 - 6		5 VDC + AM MOD		
	A13 EDGE CARD	A13 P1 - 7		A19 J13 - 7		NC		
	A13 EDGE CARD	A13 P1 - 8		A19 J13 - 8		NC		
	A13 EDGE CARD	A13 P1 - 9		A19 J13 - 9		NC		
	A13 EDGE CARD	A13 P1 - 10		A19 J13 - 10		NC		
	A13 EDGE CARD	A13 P1 - 11		A19 J13 - 11		NC		
	A13 EDGE CARD	A13 P1 - 12		A19 J13 - 12		NC		
	A13 EDGE CARD	A13 P1 - 13		A19 J13 - 13		MIC INPUT		
	A13 EDGE CARD	A13 P1 - 14		A19 J13 - 14		NC		
	A13 EDGE CARD	A13 P1 - 15		A19 J13 - 15		EXT MOD INPUT		
	A13 EDGE CARD	A13 P1 - 16		A19 J13 - 16		NC		
	A13 EDGE CARD	A13 P1 - 17		A19 J13 - 17		NC		
	A13 EDGE CARD	A13 P1 - 18		A19 J13 - 18		NC		
	A13 EDGE CARD	A13 P1 - 19		A19 J13 - 19		DEMOD CAL AUDIO		
	A13 EDGE CARD	A13 P1 - 20		A19 J13 - 20		$\overline{\text{POWER ON}}$		
	A13 EDGE CARD	A13 P1 - 21		A19 J13 - 21		NC		
	A13 EDGE CARD	A13 P1 - 22		A19 J13 - 22		VOL CNTL AUDIO		
	A13 EDGE CARD	A13 P1 - 23		A19 J13 - 23		$\overline{\text{ROM-P7}}$		
	A13 EDGE CARD	A13 P1 - 24		A19 J13 - 24		$\overline{\text{ROM-P6}}$		
	A13 EDGE CARD	A13 P1 - 25		A19 J13 - 25		NC		
	A13 EDGE CARD	A13 P1 - 26		A19 J13 - 26		$\overline{\text{ROM-P10}}$		
	A13 EDGE CARD	A13 P1 - 27		A19 J13 - 27		NC		
	A13 EDGE CARD	A13 P1 - 28		A19 J13 - 28		1 KHZ SINE (I)		
	A13 EDGE CARD	A13 P1 - 29		A19 J13 - 29		1 KHZ SINE RTN (I)		
	A13 EDGE CARD	A13 P1 - 30		A19 J13 - 30		1 KHZ SINE RTN (O)		
	A13 EDGE CARD	A13 P1 - 31		A19 J13 - 31		1 KHZ SINE RTN		
	A13 EDGE CARD	A13 P1 - 32		A19 J13 - 32		$\overline{\text{ROM-P5}}$		
	A13 EDGE CARD	A13 P1 - 33		A19 J13 - 33		$\overline{\text{ROM-P8}}$		
	A13 EDGE CARD	A13 P1 - 34		A19 J13 - 34		EXT MOD (I)		
	A13 EDGE CARD	A13 P1 - 35		A19 J13 - 35		EXT MOD RTN (I)		
	A13 EDGE CARD	A13 P1 - 36		A19 J13 - 36		EXT MOD RTN (O)		
	A13 EDGE CARD	A13 P1 - 37		A19 J13 - 37		EXT MOD RTN		
	A13 EDGE CARD	A13 P1 - 38		A19 J13 - 38		NC		
	A13 EDGE CARD	A13 P1 - 39		A19 J13 - 39		NC		
	A13 EDGE CARD	A13 P1 - 40		A19 J13 - 40		INT MOD (I)		
	A13 EDGE CARD	A13 P1 - 41		A19 J13 - 41		INT MOD RTN (I)		
	A13 EDGE CARD	A13 P1 - 42		A19 J13 - 42		INT MOD RTN (O)		
	A13 EDGE CARD	A13 P1 - 43		A19 J13 - 43		INT MOD RTN		
	A13 EDGE CARD	A13 P1 - 44		A19 J13 - 44		INT SCOPE TO RNG SW		
	A13 EDGE CARD	A13 P1 - 45		A19 J13 - 45		+5V		
	A13 EDGE CARD	A13 P1 - 46		A19 J13 - 46		+5V		
	A13 EDGE CARD	A13 P1 - 47		A19 J13 - 47		−5V		

Table 5-2m. System Wirelist – IEEE Interface Option Board (A13) (Cont)

1	2	3	4	5	6	7	8	9
WIRE NO.	COLOR SIZE AWG	WIRE RUNS FROM	NOTE OR VIEW	TO	NOTE OR VIEW	FUNCTION ROUTING REMARKS	APPROX LENGTH (INCHES)	USE FIND NO.
	A13 EDGE CARD	A13 P1 - 48		A19 J13 - 48		−5V		
	A13 EDGE CARD	A13 P1 - 49		A19 J13 - 49		+33V		
	A13 EDGE CARD	A13 P1 - 50		A19 J13 - 50		+33V		
	A13 EDGE CARD	A13 P1 - 51		A19 J13 - 51		+12V		
	A13 EDGE CARD	A13 P1 - 52		A19 J13 - 52		+12V		
	A13 EDGE CARD	A13 P1 - 53		A19 J13 - 53		−12V		
	A13 EDGE CARD	A13 P1 - 54		A19 J13 - 54		−12V		
	A13 EDGE CARD	A13 P1 - 55		A19 J13 - 55		INT FREQ CNTR		
	A13 EDGE CARD	A13 P1 - 56		A19 J13 - 56		V_{PP}		
	A13 EDGE CARD	A13 P1 - 57		A19 J13 - 57		$\overline{PGM}$		
	A13 EDGE CARD	A13 P1 - 58		A19 J13 - 58		$\overline{NMI}$		
	A13 EDGE CARD	A13 P1 - 59		A19 J13 - 59		$\overline{ROM\text{-}P3}$		
	A13 EDGE CARD	A13 P1 - 60		A19 J13 - 60		$\overline{ROM\text{-}P1}$		
	A13 EDGE CARD	A13 P1 - 61		A19 J13 - 61		$\overline{ROM\text{-}P0}$		
	A13 EDGE CARD	A13 P1 - 62		A19 J13 - 62		$\overline{ROM\text{-}P14}$		
	A13 EDGE CARD	A13 P1 - 63		A19 J13 - 63		$\overline{ROM\text{-}P13}$		
	A13 EDGE CARD	A13 P1 - 64		A19 J13 - 64		$\overline{FIRQ}$		
	A13 EDGE CARD	A13 P1 - 65		A19 J13 - 65		$\overline{ROM\text{-}P12}$		
	A13 EDGE CARD	A13 P1 - 66		A19 J13 - 66		$\overline{XRAM}$		
	A13 EDGE CARD	A13 P1 - 67		A19 J13 - 67		$\overline{ROM\text{-}P11}$		
	A13 EDGE CARD	A13 P1 - 68		A19 J13 - 68		$\overline{ROM\text{-}P9}$		
	A13 EDGE CARD	A13 P1 - 69		A19 J13 - 69		$\overline{RESET}$		
	A13 EDGE CARD	A13 P1 - 70		A19 J13 - 70		$\overline{IRQ}$		
	A13 EDGE CARD	A13 P1 - 71		A19 J13 - 71		A1		
	A13 EDGE CARD	A13 P1 - 72		A19 J13 - 72		A0		
	A13 EDGE CARD	A13 P1 - 73		A19 J13 - 73		A3		
	A13 EDGE CARD	A13 P1 - 74		A19 J13 - 74		A2		
	A13 EDGE CARD	A13 P1 - 75		A19 J13 - 75		A5		
	A13 EDGE CARD	A13 P1 - 76		A19 J13 - 76		A4		
	A13 EDGE CARD	A13 P1 - 77		A19 J13 - 77		A7		
	A13 EDGE CARD	A13 P1 - 78		A19 J13 - 78		A6		
	A13 EDGE CARD	A13 P1 - 79		A19 J13 - 79		A9		
	A13 EDGE CARD	A13 P1 - 80		A19 J13 - 80		A8		
	A13 EDGE CARD	A13 P1 - 81		A19 J13 - 81		A11		
	A13 EDGE CARD	A13 P1 - 82		A19 J13 - 82		A10		
	A13 EDGE CARD	A13 P1 - 83		A19 J13 - 83		A13		
	A13 EDGE CARD	A13 P1 - 84		A19 J13 - 84		A12		
	A13 EDGE CARD	A13 P1 - 85		A19 J13 - 85		A15		
	A13 EDGE CARD	A13 P1 - 86		A19 J13 - 86		A14		
	A13 EDGE CARD	A13 P1 - 87		A19 J13 - 87		$\overline{I/O\ EN}$		
	A13 EDGE CARD	A13 P1 - 88		A19 J13 - 88		E		
	A13 EDGE CARD	A13 P1 - 89		A19 J13 - 89		Q		
	A13 EDGE CARD	A13 P1 - 90		A19 J13 - 90		R/$\overline{W}$		
	A13 EDGE CARD	A13 P1 - 91		A19 J13 - 91		D1		
	A13 EDGE CARD	A13 P1 - 92		A19 J13 - 92		D0		
	A13 EDGE CARD	A13 P1 - 93		A19 J13 - 93		D3		
	A13 EDGE CARD	A13 P1 - 94		A19 J13 - 94		D2		

Table 5-2m. System Wirelist – IEEE Interface Option Board (A13) (Cont)

1	2	3	4	5	6	7	8	9
WIRE NO.	COLOR SIZE AWG	WIRE RUNS FROM	NOTE OR VIEW	WIRE RUNS TO	NOTE OR VIEW	FUNCTION ROUTING REMARKS	APPROX LENGTH (INCHES)	USE FIND NO.
	A13 EDGE CARD	A13 P1 - 95		A19 J13 - 95		D5		
	A13 EDGE CARD	A13 P1 - 96		A19 J13 - 96		D4		
	A13 EDGE CARD	A13 P1 - 97		A19 J13 - 97		D7		
	A13 EDGE CARD	A13 P1 - 98		A19 J13 - 98		D6		
	A13 EDGE CARD	A13 P1 - 99		A19 J13 - 99		GND		
	A13 EDGE CARD	A13 P1 - 100		A19 J13 - 100		GND		

Table 5-2n. System Wirelist–Processor Board (A14)

1	2	3	4	5	6	7	8	9
WIRE NO.	COLOR SIZE AWG	WIRE RUNS FROM	NOTE OR VIEW	WIRE RUNS TO	NOTE OR VIEW	FUNCTION ROUTING REMARKS	APPROX LENGTH (INCHES)	USE FIND NO.
	A14 EDGE CARD	A14 P1 - 1		A19 J14 - 1		GND		
	A14 EDGE CARD	A14 P1 - 2		A19 J14 - 2		GND		
	A14 EDGE CARD	A14 P1 - 3		A19 J14 - 3		COLUMN 0		
	A14 EDGE CARD	A14 P1 - 4		A19 J14 - 4		COLUMN 1		
	A14 EDGE CARD	A14 P1 - 5		A19 J14 - 5		COLUMN 2		
	A14 EDGE CARD	A14 P1 - 6		A19 J14 - 6		COLUMN 3		
	A14 EDGE CARD	A14 P1 - 7		A19 J14 - 7		ROW 0		
	A14 EDGE CARD	A14 P1 - 8		A19 J14 - 8		ROW 1		
	A14 EDGE CARD	A14 P1 - 9		A19 J14 - 9		ROW 2		
	A14 EDGE CARD	A14 P1 - 10		A19 J14 - 10		ROW 3		
	A14 EDGE CARD	A14 P1 - 11		A19 J14 - 11		CB2		
	A14 EDGE CARD	A14 P1 - 12		A19 J14 - 12		OPT B DET		
	A14 EDGE CARD	A14 P1 - 13		A19 J14 - 13		KEY ROW 4		
	A14 EDGE CARD	A14 P1 - 14		A19 J14 - 14		OPT A DET		
	A14 EDGE CARD	A14 P1 - 15		A19 J14 - 15		OPTO CCW		
	A14 EDGE CARD	A14 P1 - 16		A19 J14 - 16		VERT FROM RANGE SW		
	A14 EDGE CARD	A14 P1 - 17		A19 J14 - 17		$\overline{\text{ROM-P15}}$		
	A14 EDGE CARD	A14 P1 - 18		A19 J14 - 18		$\overline{\text{AF BUS EN 1}}$		
	A14 EDGE CARD	A14 P1 - 19		A19 J14 - 19		VERT CHAR SYNC		
	A14 EDGE CARD	A14 P1 - 20		A19 J14 - 20		HORIZ CHAR SYNC		
	A14 EDGE CARD	A14 P1 - 21		A19 J14 - 21		CHAR GEN Z-AXIS		
	A14 EDGE CARD	A14 P1 - 22		A19 J14 - 22		$\overline{\text{CHAR GEN RST}}$		
	A14 EDGE CARD	A14 P1 - 23		A19 J14 - 23		$\overline{\text{ROM-P7}}$		
	A14 EDGE CARD	A14 P1 - 24		A19 J14 - 24		$\overline{\text{ROM-P6}}$		
	A14 EDGE CARD	A14 P1 - 25		A19 J14 - 25		NC		
	A14 EDGE CARD	A14 P1 - 26		A19 J14 - 26		$\overline{\text{ROM-P10}}$		
	A14 EDGE CARD	A14 P1 - 27		A19 J14 - 27		CB1		
	A14 EDGE CARD	A14 P1 - 28		A19 J14 - 28		CA2		
	A14 EDGE CARD	A14 P1 - 29		A19 J14 - 29		BINARY MOD		
	A14 EDGE CARD	A14 P1 - 30		A19 J14 - 30		NC		

Table 5-2n. System Wirelist-Processor Board (A14) (Cont)

1	2	3	4	5	6	7	8	9
WIRE NO	COLOR SIZE AWG	WIRE RUNS FROM	NOTE OR VIEW	TO	NOTE OR VIEW	FUNCTION ROUTING REMARKS	APPROX LENGTH INCHES	USE FIND NO
	A14 EDGE CARD	A14 P1 - 31		A19 J14 - 31		EXT MDC INPUT		
	A14 EDGE CARD	A14 P1 - 32		A19 J14 - 32		ROM P5		
	A14 EDGE CARD	A14 P1 - 33		A19 J14 - 33		ROM P5		
	A14 EDGE CARD	A14 P1 - 34		A19 J14 - 34		NC		
	A14 EDGE CARD	A14 P1 - 35		A19 J14 - 35		NC		
	A14 EDGE CARD	A14 P1 - 36		A19 J14 - 36		NC		
	A14 EDGE CARD	A14 P1 - 37		A19 J14 - 37		NC		
	A14 EDGE CARD	A14 P1 - 38		A19 J14 - 38		NC		
	A14 EDGE CARD	A14 P1 - 39		A19 J14 - 39		NC		
	A14 EDGE CARD	A14 P1 - 40		A19 J14 - 40		NC		
	A14 EDGE CARD	A14 P1 - 41		A19 J14 - 41		NC		
	A14 EDGE CARD	A14 P1 - 42		A19 J14 - 42		NC		
	A14 EDGE CARD	A14 P1 - 43		A19 J14 - 43		NC		
	A14 EDGE CARD	A14 P1 - 44		A19 J14 - 44		LINE 1		
	A14 EDGE CARD	A14 P1 - 45		A19 J14 - 45				
	A14 EDGE CARD	A14 P1 - 46		A19 J14 - 46				
	A14 EDGE CARD	A14 P1 - 47		A19 J14 - 47				
	A14 EDGE CARD	A14 P1 - 48		A19 J14 - 48				
	A14 EDGE CARD	A14 P1 - 49		A19 J14 - 49		NC		
	A14 EDGE CARD	A14 P1 - 50		A19 J14 - 50		NC		
	A14 EDGE CARD	A14 P1 - 51		A19 J14 - 51		NC		
	A14 EDGE CARD	A14 P1 - 52		A19 J14 - 52		NC		
	A14 EDGE CARD	A14 P1 - 53		A19 J14 - 53		NC		
	A14 EDGE CARD	A14 P1 - 54		A19 J14 - 54		NC		
	A14 EDGE CARD	A14 P1 - 55		A19 J14 - 55				
	A14 EDGE CARD	A14 P1 - 56		A19 J14 - 56				
	A14 EDGE CARD	A14 P1 - 57		A19 J14 - 57		PGM		
	A14 EDGE CARD	A14 P1 - 58		A19 J14 - 58		VMI		
	A14 EDGE CARD	A14 P1 - 59		A19 J14 - 59		ROM P1		
	A14 EDGE CARD	A14 P1 - 60		A19 J14 - 60		ROM P1		
	A14 EDGE CARD	A14 P1 - 61		A19 J14 - 61		ROM P0		
	A14 EDGE CARD	A14 P1 - 62		A19 J14 - 62		ROM P14		
	A14 EDGE CARD	A14 P1 - 63		A19 J14 - 63		ROM P13		
	A14 EDGE CARD	A14 P1 - 64		A19 J14 - 64		FREQ		
	A14 EDGE CARD	A14 P1 - 65		A19 J14 - 65		ROM P12		
	A14 EDGE CARD	A14 P1 - 66		A19 J14 - 66		VRAM		
	A14 EDGE CARD	A14 P1 - 67		A19 J14 - 67		ROM P11		
	A14 EDGE CARD	A14 P1 - 68		A19 J14 - 68		ROM P6		
	A14 EDGE CARD	A14 P1 - 69		A19 J14 - 69		RESET		
	A14 EDGE CARD	A14 P1 - 70		A19 J14 - 70		IRQ		
	A14 EDGE CARD	A14 P1 - 71		A19 J14 - 71		A1		
	A14 EDGE CARD	A14 P1 - 72		A19 J14 - 72		A0		
	A14 EDGE CARD	A14 P1 - 73		A19 J14 - 73		A3		
	A14 EDGE CARD	A14 P1 - 74		A19 J14 - 74		A2		
	A14 EDGE CARD	A14 P1 - 75		A19 J14 - 75		A5		
	A14 EDGE CARD	A14 P1 - 76		A19 J14 - 76		A4		
	A14 EDGE CARD	A14 P1 - 77		A19 J14 - 77		A7		

Table 5-2n. System Wirelist–Processor Board (A14) (Cont)

1	2	3	4	5	6	7	8	9
WIRE NO.	COLOR SIZE AWG	WIRE RUNS FROM	NOTE OR VIEW	TO	NOTE OR VIEW	FUNCTION ROUTING REMARKS	APPROX LENGTH (INCHES)	USE FIND NO.
	A14 EDGE CARD	A14 P1 - 78		A19 J14 - 78		A6		
	A14 EDGE CARD	A14 P1 - 79		A19 J14 - 79		A9		
	A14 EDGE CARD	A14 P1 - 80		A19 J14 - 80		A8		
	A14 EDGE CARD	A14 P1 - 81		A19 J14 - 81		A11		
	A14 EDGE CARD	A14 P1 - 82		A19 J14 - 82		A10		
	A14 EDGE CARD	A14 P1 - 83		A19 J14 - 83		A13		
	A14 EDGE CARD	A14 P1 - 84		A19 J14 - 84		A12		
	A14 EDGE CARD	A14 P1 - 85		A19 J14 - 85		A15		
	A14 EDGE CARD	A14 P1 - 86		A19 J14 - 86		A14		
	A14 EDGE CARD	A14 P1 - 87		A19 J14 - 87		$\overline{\text{I/O EN}}$		
	A14 EDGE CARD	A14 P1 - 88		A19 J14 - 88		E		
	A14 EDGE CARD	A14 P1 - 89		A19 J14 - 89		Q		
	A14 EDGE CARD	A14 P1 - 90		A19 J14 - 90		R/$\overline{\text{W}}$		
	A14 EDGE CARD	A14 P1 - 91		A19 J14 - 91		D1		
	A14 EDGE CARD	A14 P1 - 92		A19 J14 - 92		D0		
	A14 EDGE CARD	A14 P1 - 93		A19 J14 - 93		D3		
	A14 EDGE CARD	A14 P1 - 94		A19 J14 - 94		D2		
	A14 EDGE CARD	A14 P1 - 95		A19 J14 - 95		D5		
	A14 EDGE CARD	A14 P1 - 96		A19 J14 - 96		D4		
	A14 EDGE CARD	A14 P1 - 97		A19 J14 - 97		D7		
	A14 EDGE CARD	A14 P1 - 98		A19 J14 - 98		D6		
	A14 EDGE CARD	A14 P1 - 99		A19 J14 - 99		GND		
	A14 EDGE CARD	A14 P1 - 100		A19 J14 - 100		GND		

Table 5-2o. System Wirelist – Front-Panel Interface Board (A15)

1	2	3	4	5	6	7	8	9
WIRE NO.	COLOR SIZE AWG	WIRE RUNS FROM	NOTE OR VIEW	TO	NOTE OR VIEW	FUNCTION ROUTING REMARKS	APPROX LENGTH (INCHES)	USE FIND NO.
	A15 EDGE CARD	A15 P1 - 1		A19 J15 - 1		EXT INPUT		
	A15 EDGE CARD	A15 P1 - 2		A19 J15 - 2		GND		
	A15 EDGE CARD	A15 P1 - 3		A19 J15 - 3		NC		
	A15 EDGE CARD	A15 P1 - 4		A19 J15 - 4		VERT POS		
	A15 EDGE CARD	A15 P1 - 5		A19 J15 - 5		VERT GAIN		
	A15 EDGE CARD	A15 P1 - 6		A19 J15 - 6		VERT GAIN RTN		
	A15 EDGE CARD	A15 P1 - 7		A19 J15 - 7		RF ATTEN 130 dB		
	A15 EDGE CARD	A15 P1 - 8		A19 J15 - 8		RF ATTEN 120 dB		
	A15 EDGE CARD	A15 P1 - 9		A19 J15 - 9		RF ATTEN 110 dB		
	A15 EDGE CARD	A15 P1 - 10		A19 J15 - 10		RF ATTEN 100 dB		

Table 5-2o. System Wirelist – Front-Panel Interface Board (A15) (Cont)

1	2	3	4	5	6	7	8	9
WIRE NO.	COLOR SIZE AWG	WIRE RUNS FROM	NOTE OR VIEW	TO	NOTE OR VIEW	FUNCTION ROUTING REMARKS	APPROX LENGTH (INCHES)	USE FIND NO.
	A15 EDGE CARD	A15 P1 - 11		A19 J15 - 11		RF ATTEN 90 dB		
	A15 EDGE CARD	A15 P1 - 12		A19 J15 - 12		RF ATTEN 80 dB		
	A15 EDGE CARD	A15 P1 - 13		A19 J15 - 13		RF ATTEN 70 dB		
	A15 EDGE CARD	A15 P1 - 14		A19 J15 - 14		RF ATTEN 60 dB		
	A15 EDGE CARD	A15 P1 - 15		A19 J15 - 15		RF ATTEN 50 dB		
	A15 EDGE CARD	A15 P1 - 16		A19 J15 - 16		RF ATTEN 40 dB		
	A15 EDGE CARD	A15 P1 - 17		A19 J15 - 17		RF ATTEN 30 dB		
	A15 EDGE CARD	A15 P1 - 18		A19 J15 - 18		RF ATTEN 20 dB		
	A15 EDGE CARD	A15 P1 - 19		A19 J15 - 19		RF ATTEN 10 dB		
	A15 EDGE CARD	A15 P1 - 20		A19 J15 - 20		VERT FROM RNG SW		
	A15 EDGE CARD	A15 P1 - 21		A19 J15 - 21		RF ATTEN 0 dB		
	A15 EDGE CARD	A15 P1 - 22		A19 J15 - 22		DVM FROM RNG SW		
	A15 EDGE CARD	A15 P1 - 23		A19 J15 - 23		NC		
	A15 EDGE CARD	A15 P1 - 24		A19 J15 - 24		INT SCOPE TO RNG		
	A15 EDGE CARD	A15 P1 - 25		A19 J15 - 25		10V/DIV RNG SEL		
	A15 EDGE CARD	A15 P1 - 26		A19 J15 - 26		1V/DIV RNG SEL		
	A15 EDGE CARD	A15 P1 - 27		A19 J15 - 27		0.1V/DIV RNG SEL		
	A15 EDGE CARD	A15 P1 - 28		A19 J15 - 28		0.01/DIV RNG SEL		
	A15 EDGE CARD	A15 P1 - 29		A19 J15 - 29		OFFSET ON/OFF		
	A15 EDGE CARD	A15 P1 - 30		A19 J15 - 30		$\overline{\text{IF OVERLOAD}}$		
	A15 EDGE CARD	A15 P1 - 31		A19 J15 - 31		WB/NB		
	A15 EDGE CARD	A15 P1 - 32		A19 J15 - 32		SIGNAL PRESENT		
	A15 EDGE CARD	A15 P1 - 33		A19 J15 - 33		$\overline{\text{ANT SEL}}$		
	A15 EDGE CARD	A15 P1 - 34		A19 J15 - 34		EXT FREQ CNTR		
	A15 EDGE CARD	A15 P1 - 35		A19 J15 - 35		SPARE BIT		
	A15 EDGE CARD	A15 P1 - 36		A19 J15 - 36		$\overline{\text{EXT FREQ CNTR}}$		
	A15 EDGE CARD	A15 P1 - 37		A19 J15 - 37		RF OVER TEMP		
	A15 EDGE CARD	A15 P1 - 38		A19 J15 - 38		WB SIG PRES		
	A15 EDGE CARD	A15 P1 - 39		A19 J15 - 39		$\overline{\text{FIRQ}}$		
	A15 EDGE CARD	A15 P1 - 40		A19 J15 - 40		OPTO CCW		
	A15 EDGE CARD	A15 P1 - 41		A19 J15 - 41		NC		
	A15 EDGE CARD	A15 P1 - 42		A19 J15 - 42		OPTICAL ENC B		
	A15 EDGE CARD	A15 P1 - 43		A19 J15 - 43		NC		
	A15 EDGE CARD	A15 P1 - 44		A19 J15 - 44		OPTICAL ENC A		
	A15 EDGE CARD	A15 P1 - 45		A19 J15 - 45		+5V		
	A15 EDGE CARD	A15 P1 - 46		A19 J15 - 46		+5V		
	A15 EDGE CARD	A15 P1 - 47		A19 J15 - 47		NC		
	A15 EDGE CARD	A15 P1 - 48		A19 J15 - 48		NC		
	A15 EDGE CARD	A15 P1 - 49		A19 J15 - 49		HORIZ INPUT		
	A15 EDGE CARD	A15 P1 - 50		A19 J15 - 50		HORIZ TO SCOPE AMP		
	A15 EDGE CARD	A15 P1 - 51		A19 J15 - 51		+12V		
	A15 EDGE CARD	A15 P1 - 52		A19 J15 - 52		+12V		
	A15 EDGE CARD	A15 P1 - 53		A19 J15 - 53		−12V		
	A15 EDGE CARD	A15 P1 - 54		A19 J15 - 54		−12V		
	A15 EDGE CARD	A15 P1 - 55		A19 J15 - 55		EXT HORIZ SEL		
	A15 EDGE CARD	A15 P1 - 56		A19 J15 - 56		100 MS/DIV SWP SEL		
	A15 EDGE CARD	A15 P1 - 57		A19 J15 - 57		10 MS/DIV SWP SEL		

Table 5-2o. System Wirelist–Front-Panel Interface Board (A15) (Cont)

1	2	3	4	5	6	7	8	9
WIRE NO.	COLOR SIZE AWG	WIRE RUNS FROM	NOTE OR VIEW	TO	NOTE OR VIEW	FUNCTION ROUTING REMARKS	APPROX LENGTH (INCHES)	USE FIND NO.
	A15 EDGE CARD	A15 P1 - 58		A19 J15 - 58		1 MS/DIV SWP SEL		
	A15 EDGE CARD	A15 P1 - 59		A19 J15 - 59		100 µS/DIV SWP SEL		
	A15 EDGE CARD	A15 P1 - 60		A19 J15 - 60		10 µS/DIV SWP SEL		
	A15 EDGE CARD	A15 P1 - 61		A19 J15 - 61		1 µS/DIV SWP SEL		
	A15 EDGE CARD	A15 P1 - 62		A19 J15 - 62		AF ADD BUS 0		
	A15 EDGE CARD	A15 P1 - 63		A19 J15 - 63		AF ADD BUS 1		
	A15 EDGE CARD	A15 P1 - 64		A19 J15 - 64		AF ADD BUS 2		
	A15 EDGE CARD	A15 P1 - 65		A19 J15 - 65		AF ADD BUS 3		
	A15 EDGE CARD	A15 P1 - 66		A19 J15 - 66		AF DATA BUS 3		
	A15 EDGE CARD	A15 P1 - 67		A19 J15 - 67		AF DATA BUS 2		
	A15 EDGE CARD	A15 P1 - 68		A19 J15 - 68		AF DATA BUS 1		
	A15 EDGE CARD	A15 P1 - 69		A19 J15 - 69		$\overline{\text{AF BUS EN 2}}$		
	A15 EDGE CARD	A15 P1 - 70		A19 J15 - 70		AF DATA BUS 0		
	A15 EDGE CARD	A15 P1 - 71		A19 J15 - 71		+8V OUT		
	A15 EDGE CARD	A15 P1 - 72		A19 J15 - 72		−8V OUT		
	A15 EDGE CARD	A15 P1 - 73		A19 J15 - 73		IMAGE HI/LO		
	A15 EDGE CARD	A15 P1 - 74		A19 J15 - 74		ATTN X 0.01		
	A15 EDGE CARD	A15 P1 - 75		A19 J15 - 75		ATTN X 0.001		
	A15 EDGE CARD	A15 P1 - 76		A19 J15 - 76		OFFSET ATTEN EN		
	A15 EDGE CARD	A15 P1 - 77		A19 J15 - 77		DC SELECT		
	A15 EDGE CARD	A15 P1 - 78		A19 J15 - 78		MON + DSB/GEN		
	A15 EDGE CARD	A15 P1 - 79		A19 J15 - 79		ATTN X 0.1		
	A15 EDGE CARD	A15 P1 - 80		A19 J15 - 80		EXT INPUT SEL		
	A15 EDGE CARD	A15 P1 - 81		A19 J15 - 81		MON/GEN		
	A15 EDGE CARD	A15 P1 - 82		A19 J15 - 82		ATTN X 1.0		
	A15 EDGE CARD	A15 P1 - 83		A19 J15 - 83		COLUMN 1		
	A15 EDGE CARD	A15 P1 - 84		A19 J15 - 84		COLUMN 0		
	A15 EDGE CARD	A15 P1 - 85		A19 J15 - 85		ROW 1		
	A15 EDGE CARD	A15 P1 - 86		A19 J15 - 86		ROW 2		
	A15 EDGE CARD	A15 P1 - 87		A19 J15 - 87		ROW 3		
	A15 EDGE CARD	A15 P1 - 88		A19 J15 - 88		COLUMN 3		
	A15 EDGE CARD	A15 P1 - 89		A19 J15 - 89		COLUMN 2		
	A15 EDGE CARD	A15 P1 - 90		A19 J15 - 90		KEY ROW 4		
	A15 EDGE CARD	A15 P1 - 91		A19 J15 - 91		$\overline{\text{POWER OFF}}$		
	A15 EDGE CARD	A15 P1 - 92		A19 J15 - 92		ROW 0		
	A15 EDGE CARD	A15 P1 - 93		A19 J15 - 93		OVEN LED CATH		
	A15 EDGE CARD	A15 P1 - 94		A19 J15 - 94		$\overline{\text{POWER ON}}$		
	A15 EDGE CARD	A15 P1 - 95		A19 J15 - 95		DC LED CATH		
	A15 EDGE CARD	A15 P1 - 96		A19 J15 - 96		OVEN LED ANODE		
	A15 EDGE CARD	A15 P1 - 97		A19 J15 - 97		AC LED		
	A15 EDGE CARD	A15 P1 - 98		A19 J15 - 98		DC LED		
	A15 EDGE CARD	A15 P1 - 99		A19 J15 - 99		GND		
	A15 EDGE CARD	A15 P1 - 100		A19 J15 - 100		GND		
AF DATA	CABLE ASSEM, RIBBON	A15 J1 - 1		A18A1 J1 - 1		AF DATA BUS 0		055
AF DATA	CABLE ASSEM, RIBBON	A15 J1 - 2		A18A1 J1 - 2		AF DATA BUS 1		055
AF DATA	CABLE ASSEM, RIBBON	A15 J1 - 3		A18A1 J1 - 3		AF DATA BUS 3		055
AF DATA	CABLE ASSEM, RIBBON	A15 J1 - 4		A18A1 J1 - 4		AF DATA BUS 2		055

Table 5-2o. System Wirelist – Front-Panel Interface Board (A15) (Cont)

1	2	3	4	5	6	7	8	9
WIRE NO.	COLOR SIZE AWG	WIRE RUNS FROM	NOTE OR VIEW	TO	NOTE OR VIEW	FUNCTION ROUTING REMARKS	APPROX LENGTH (INCHES)	USE FIND NO.
AF DATA	CABLE ASSEM, RIBBON	A15 J1 - 5		A18A1 J1 - 5		$\overline{\text{LS 1}}$		055
AF DATA	CABLE ASSEM, RIBBON	A15 J1 - 6		A18A1 J1 - 6		$\overline{\text{LS 2}}$		055
AF DATA	CABLE ASSEM, RIBBON	A15 J1 - 7		A18A1 J1 - 7		OVEN LED ANODE		055
AF DATA	CABLE ASSEM, RIBBON	A15 J1 - 8		A18A1 J1 - 8		OVEN LED CATHODE		055
AF DATA	CABLE ASSEM, RIBBON	A15 J1 - 9		A18A1 J1 - 9		DC LED CATHODE		055
AF DATA	CABLE ASSEM, RIBBON	A15 J1 - 10		A18A1 J1 - 10		DC LED ANODE		055
AF DATA	CABLE ASSEM, RIBBON	A15 J1 - 11		A18A1 J1 - 11		AC LED		055
AF DATA	CABLE ASSEM, RIBBON	A15 J1 - 12		A18A1 J1 - 12		$\overline{\text{LS 0}}$		055
AF DATA	CABLE ASSEM, RIBBON	A15 J1 - 13		A18A1 J1 - 13		+5V		055
AF DATA	CABLE ASSEM, RIBBON	A15 J1 - 14		A18A1 J1 - 14		+5V		055
AF DATA	CABLE ASSEM, RIBBON	A15 J1 - 15		A18A1 J1 - 15		GND		055
AF DATA	CABLE ASSEM, RIBBON	A15 J1 - 16		A18A1 J1 - 16		GND		055
KEY DATA	CABLE ASSEM, RIBBON	A15 J2 - 1		A18A1 J2 - 1		ROW 4		055
KEY DATA	CABLE ASSEM, RIBBON	A15 J2 - 2		A18A1 J2 - 2		ROW 3		055
KEY DATA	CABLE ASSEM, RIBBON	A15 J2 - 3		A18A1 J2 - 3		NC		055
KEY DATA	CABLE ASSEM, RIBBON	A15 J2 - 4		A18A1 J2 - 4		COLUMN 3		055
KEY DATA	CABLE ASSEM, RIBBON	A15 J2 - 5		A18A1 J2 - 5		ROW 1		055
KEY DATA	CABLE ASSEM, RIBBON	A15 J2 - 6		A18A1 J2 - 6		ROW 2		055
KEY DATA	CABLE ASSEM, RIBBON	A15 J2 - 7		A18A1 J2 - 7		COLUMN 0		055
KEY DATA	CABLE ASSEM, RIBBON	A15 J2 - 8		A18A1 J2 - 8		COLUMN 1		055
KEY DATA	CABLE ASSEM, RIBBON	A15 J2 - 9		A18A1 J2 - 9		COLUMN 2		055
KEY DATA	CABLE ASSEM, RIBBON	A15 J2 - 10		A18A1 J2 - 10		ROW 0		055
KEY DATA	CABLE ASSEM, RIBBON	A15 J2 - 11		A18A1 J2 - 11		$\overline{\text{CSSG CONT}}$		055
KEY DATA	CABLE ASSEM, RIBBON	A15 J2 - 12		A18A1 J2 - 12		$\overline{\text{CSSG BURST}}$		055
KEY DATA	CABLE ASSEM, RIBBON	A15 J2 - 13		A18A1 J2 - 13		$\overline{\text{POWER OFF}}$		055
KEY DATA	CABLE ASSEM, RIBBON	A15 J2 - 14		A18A1 J2 - 14		$\overline{\text{POWER ON}}$		055
KEY DATA	CABLE ASSEM, RIBBON	A15 J2 - 15		A18A1 J2 - 15		MON/GEN		055
KEY DATA	CABLE ASSEM, RIBBON	A15 J2 - 16		A18A1 J2 - 16		SPARE BIT		055

Table 5-2p. System Wirelist – Frequency-Standard Interface Board (A16)

1	2	3	4	5	6	7	8	9
WIRE NO.	COLOR SIZE AWG	WIRE RUNS FROM	NOTE OR VIEW	TO	NOTE OR VIEW	FUNCTION ROUTING REMARKS	APPROX LENGTH (INCHES)	USE FIND NO.
A19008	COAX ASSEMBLY	A16 J1		A19 E15		10 MHZ REF		8
W4	RIBBON CABLE	A16 J2 - 1		A19 J16 - 1		FREQ STD SUPPLY		W004
W4	RIBBON CABLE	A16 J2 - 2		A19 J16 - 2		GND		W004
W4	RIBBON CABLE	A16 J2 - 3		A19 J16 - 3		NC		W004
W4	RIBBON CABLE	A16 J2 - 4		A19 J16 - 4		NC		W004
W4	RIBBON CABLE	A16 J2 - 5		A19 J16 - 5		OVEN LED ANODE		W004
W4	RIBBON CABLE	A16 J2 - 6		A19 J16 - 6		OVEN LED CATHODE		W004
W4	RIBBON CABLE	A16 J2 - 7		A19 J16 - 7		NC		W004
W4	RIBBON CABLE	A16 J2 - 8		A19 J16 - 8		+12V		W004
A16W1	COAX ASSEMBLY	A16 E18		J17		10 MHZ IN/OUT		W001
250	WHT TEF 22	A16 E1		TCXO - 1		10 MHZ STD +9V	2.75	6
250	WHT TEF 22	A16 E2		TCXO - 2		GND	2.75	6
250	WHT TEF 22	A16 E3		TCXO - 3		10 MHZ STD OUT	2.75	6

Table 5-2q. System Wirelist – RF Input Module (A17)

1	2	3	4	5	6	7	8	9
WIRE NO.	COLOR SIZE AWG	WIRE RUNS FROM	NOTE OR VIEW	TO	NOTE OR VIEW	FUNCTION ROUTING REMARKS	APPROX LENGTH (INCHES)	USE FIND NO.
RIBBON	A17 SYSTEM INTER	A17 P1 - 1		A19 J17 - 1		+5V		W001
RIBBON	A17 SYSTEM INTER	A17 P1 - 2		A19 J17 - 2		−5V		W001
RIBBON	A17 SYSTEM INTER	A17 P1 - 3		A19 J17 - 3		+33V		W001
RIBBON	A17 SYSTEM INTER	A17 P1 - 4		A19 J17 - 4		OFFSET ON/OFF		W001
RIBBON	A17 SYSTEM INTER	A17 P1 - 5		A19 J17 - 5		OFFSET ATTEN EN		W001
RIBBON	A17 SYSTEM INTER	A17 P1 - 6		A19 J17 - 6		DATA CLOCK		W001
RIBBON	A17 SYSTEM INTER	A17 P1 - 7		A19 J17 - 7		DATA LATCH		W001
RIBBON	A17 SYSTEM INTER	A17 P1 - 8		A19 J17 - 8		OFFSET DATA		W001
RIBBON	A17 SYSTEM INTER	A17 P1 - 9		A19 J17 - 9		ANT EN		W001
RIBBON	A17 SYSTEM INTER	A17 P1 - 10		A19 J17 - 10		RF INPUT PWR		W001
RIBBON	A17 SYSTEM INTER	A17 P1 - 11		A19 J17 - 11		GND		W001
RIBBON	A17 SYSTEM INTER	A17 P1 - 12		A19 J17 - 12		GND		W001
RIBBON	A17 SYSTEM INTER	A17 P1 - 13		A19 J17 - 13		0.01 - 1 AGC		W001
RIBBON	A17 SYSTEM INTER	A17 P1 - 14		A19 J17 - 14		AM MOD + DC REF (0)		W001
RIBBON	A17 SYSTEM INTER	A17 P1 - 15		A19 J17 - 15		EXT FWD PWR		W001
RIBBON	A17 SYSTEM INTER	A17 P1 - 16		A19 J17 - 16		WB AMP LO/HI		W001
RIBBON	A17 SYSTEM INTER	A17 P1 - 17		A19 J17 - 17		EXT REF PWR		W001
RIBBON	A17 SYSTEM INTER	A17 P1 - 18		A19 J17 - 18		OFFSET MOD		W001
RIBBON	A17 SYSTEM INTER	A17 P1 - 19		A19 J17 - 19		DSBSC MOD		W001
RIBBON	A17 SYSTEM INTER	A17 P1 - 20		A19 J17 - 20		RF OVER TEMP		W001
RIBBON	A17 SYSTEM INTER	A17 P1 - 21		A19 J17 - 21		CARRIER + MOD LVL		W001

Table 5-2q. System Wirelist – RF Input Module (A17) (Cont)

1	2	3	4	5	6	7	8	9
WIRE NO.	COLOR SIZE AWG	WIRE RUNS FROM	NOTE OR VIEW	TO	NOTE OR VIEW	FUNCTION ROUTING REMARKS	APPROX LENGTH (INCHES)	USE FIND NO.
RIBBON	A17 SYSTEM INTER	A17 P1 - 22		A19 J17 - 22		MOD + DSB/GEN		W001
RIBBON	A17 SYSTEM INTER	A17 P1 - 23		A19 J17 - 23		+12V		W001
RIBBON	A17 SYSTEM INTER	A17 P1 - 24		A19 J17 - 24		−12V		W001
RIBBON	A17 SYSTEM INTER	A17 P1 - 25		A19 J17 - 25		NC		W001
RIBBON	A17 SYSTEM INTER	A17 P1 - 26		A19 J17 - 26		NC		W001
RIBBON	A17 SYSTEM INTER	A17 P1 - 27		A19 J17 - 27		NC		W001
RIBBON	A17 SYSTEM INTER	A17 P1 - 28		A19 J17 - 28		NC		W001
RIBBON	A17 SYSTEM INTER	A17 P1 - 29		A19 J17 - 29		NC		W001
RIBBON	A17 SYSTEM INTER	A17 P1 - 30		A19 J17 - 30		NC		W001
RIBBON	A17 SYSTEM INTER	A17 P1 - 31		A19 J17 - 31		NC		W001
RIBBON	A17 SYSTEM INTER	A17 P1 - 32		A19 J17 - 32		NC		W001
RIBBON	A17 SYSTEM INTER	A17 P1 - 33		A19 J17 - 33		NC		W001
RIBBON	A17 SYSTEM INTER	A17 P1 - 34		A19 J17 - 34		NC		W001
RIBBON	A17 SYSTEM INTER	A17 P1 - 35		A19 J17 - 35		NC		W001
RIBBON	A17 SYSTEM INTER	A17 P1 - 36		A19 J17 - 36		NC		W001
RIBBON	A17 SYSTEM INTER	A17 P1 - 37		A19 J17 - 37		NC		W001
RIBBON	A17 SYSTEM INTER	A17 P1 - 38		A19 J17 - 38		NC		W001
RIBBON	A17 SYSTEM INTER	A17 P1 - 39		A19 J17 - 39		GND		W001
RIBBON	A17 SYSTEM INTER	A17 P1 - 40		A19 J17 - 40		NC		W001
RIBBON	A17 SYSTEM INTER	A17 P1 - 41		A19 J17 - 41		NC		W001
RIBBON	A17 SYSTEM INTER	A17 P1 - 42		A19 J17 - 42		NC		W001
RIBBON	A17 SYSTEM INTER	A17 P1 - 43		A19 J17 - 43		NC		W001
RIBBON	A17 SYSTEM INTER	A17 P1 - 44		A19 J17 - 44		NC		W001
RIBBON	A17 SYSTEM INTER	A17 P1 - 45		A19 J17 - 45		NC		W001
RIBBON	A17 SYSTEM INTER	A17 P1 - 46		A19 J17 - 46		NC		W001
RIBBON	A17 SYSTEM INTER	A17 P1 - 47		A19 J17 - 47		NC		W001
RIBBON	A17 SYSTEM INTER	A17 P1 - 48		A19 J17 - 48		NC		W001
RIBBON	A17 SYSTEM INTER	A17 P1 - 49		A19 J17 - 49		NC		W001
RIBBON	A17 SYSTEM INTER	A17 P1 - 50		A19 J17 - 50		NC		W001
A17W1	COAX ASSEMBLY	A17 J2		A17AT1 J1		STEP ATTEN IN/OUT 1		W001
A17W2	COAX ASSEMBLY	A17 J3		A17 J8		ANTENNA		W002
W3	COAX ASSEMBLY	A17 J4		A9 J1		SYNTH RF		W003
W2	COAX ASSEMBLY	A17 J5		A8 J1		10.7 MHZ IF		W002
A17W4	COAX ASSEMBLY	A17 J6		A17 J9		DUPLEX OUTPUT		W004
A17A2W1	COAX ASSEMBLY	A17A2 J1		A17AT1 J2		STEP ATTEN IN/OUT 2		W001
520	WHT TEF 22	A17A4 - E1		S1 - 15		+5V	16.15	
		A17A4 - E2				NC		
522	WHT TEF 22	A17A4 - E3		A17A3 - P5		+33V	16.75	
523	WHT TEF 22	A17A4 - E4		A17 S2 - 2		OFFSET ON/OFF	18.20	
524	WHT TEF 22	A17A4 - E5		A17A3 - P9		OFFSET ATTEN EN	14.90	
525	WHT TEF 22	A17A4 - E6		A17A3 - P1		DATA CLOCK	18.50	
526	WHT TEF 22	A17A4 - E7		A17A3 - P3		DATA LATCH	17.25	
527	WHT TEF 22	A17A4 - E8		A17A3 - P2		OFFSET DATA	17.10	
528	WHT TEF 22	A17A4 - E9		A17A1 - P6		ANT EN	13.70	
529	WHT TEF 22	A17A4 - E10		A17A1 - P2		RF INPUT PWR	16.75	
530	WHT TEF 22	A17A4 - E11		A17A1 - E1		GND	14.25	
531	WHT TEF 22	A17A4 - E12		A17A1 - E1		GND	14.25	

Table 5-2q. System Wirelist – RF Input Module (A17) (Cont)

1	2	3	4	5	6	7	8	9
WIRE NO.	COLOR SIZE AWG	WIRE RUNS FROM	NOTE OR VIEW	TO	NOTE OR VIEW	FUNCTION ROUTING REMARKS	APPROX LENGTH (INCHES)	USE FIND NO.
532	WHT TEF 22	A17A4 - E13		A17A2 - P6		0.01 - 1 AGC	3.25	
533	WHT TEF 22	A17A4 - E14		A17A2 - P7		AM MOD + DC REF (0)	4.00	
534	WHT TEF 22	A17A4 - E15		A17 J7 - C6		EXT FWD PWR	13.30	
535	WHT TEF 22	A17A4 - E16		A17A2 - P5		WB AMP HI/LO	3.65	
536	WHT TEF 22	A17A4 - E17		A17 J7 - C7		EXT RFL PWR	13.65	
537	WHT TEF 22	A17A4 - E18		A17A3 - P4		OFFSET MOD	15.90	
538	WHT TEF 22	A17A4 - E19		A17A2 - P10		DSBSC MOD	5.35	
539	WHT TEF 22	A17A4 - E20		A17A1 - P4		OVER TEMP	16.75	
540	WHT TEF 22	A17A4 - E21		A17A2 - P8		CARRIER + MOD LVL	4.50	
541	WHT TEF 22	A17A4 - E22		A17A2 - P4		MON + DSB/GEN	3.50	
542	WHT TEF 22	A17A4 - E23		A17A3 - P7		+12V	3.85	
543	WHT TEF 22	A17A4 - E24		A17A1 - P1		−12V	5.20	
544	WHT TEF 22	A17A4 - E25		A17 S1 - 4		130 DB	15.00	
545	WHT TEF 22	A17A4 - E26		A17 S1 - 5		120 DB	15.25	
546	WHT TEF 22	A17A4 - E27		A17 S1 - 6		110 DB	15.25	
547	WHT TEF 22	A17A4 - E28		A17 S1 - 7		100 DB	15.75	
548	WHT TEF 22	A17A4 - E29		A17 S1 - 8		90 DB	16.12	
549	WHT TEF 22	A17A4 - E30		A17 S1 - 9		80 DB	16.25	
550	WHT TEF 22	A17A4 - E31		A17 S1 - 10		70 DB	14.75	
551	WHT TEF 22	A17A4 - E32		A17 S1 - 11		60 DB	14.25	
552	WHT TEF 22	A17A4 - E33		A17 S1 - 12		50 DB	13.25	
553	WHT TEF 22	A17A4 - E34		A17 S1 - 13		40 DB	13.00	
554	WHT TEF 22	A17A4 - E35		A17 S1 - 14		30 DB	12.87	
555	WHT TEF 22	A17A4 - E36		A17 S1 - 1		20 DB	13.50	
556	WHT TEF 22	A17A4 - E37		A17 S1 - 2		10 DB	13.37	
557	WHT TEF 22	A17A4 - E38		A17 S1 - 3		0 DB	13.75	
558	WHT TEF 22	A17A4 - E39		A17 E2		GND	3.25	
560	WHT TEF 22	A17 - C10		A17 S1 - 15		+5V	12.75	
561	WHT TEF 22	A17 - C9		A17 FL1		+12V	16.45	
562	WHT TEF 22	A17 - C9		A17 C3		+12V	5.00	
563	WHT TEF 22	A17 - FL7		A17 C1		−12V	19.25	
564	WHT TEF 22	A17 - E3		A17 S2 - 1		GND	5.80	

Table 5-2r. System Wirelist – Front Panel Assembly (A18)

1	2	3	4	5	6	7	8	9
WIRE NO.	COLOR SIZE AWG	WIRE RUNS FROM	NOTE OR VIEW	TO	NOTE OR VIEW	FUNCTION ROUTING REMARKS	APPROX LENGTH (INCHES)	USE FIND NO.
	RIGHT FLEX, SCOPE	A18 P/O P1 - 1		A19 P1 - 1		+33V		034
	RIGHT FLEX, SCOPE	A18 P/O P1 - 2		A19 P1 - 2		NC		034
	RIGHT FLEX, SCOPE	A18 P/O P1 - 3		A19 P1 - 3		GND		034
	RIGHT FLEX, SCOPE	A18 P/O P1 - 4		A19 P1 - 4		NC		034

Table 5-2r. System Wirelist – Front Panel Assembly (A18)

1	2	3	4	5	6	7	8	9
WIRE NO.	COLOR SIZE AWG	WIRE RUNS FROM	NOTE OR VIEW	TO	NOTE OR VIEW	FUNCTION ROUTING REMARKS	APPROX LENGTH (INCHES)	USE FIND NO.
	RIGHT FLEX, SCOPE	A18 P/O P1 - 1		A19 P1 - 1		+33V		034
	RIGHT FLEX, SCOPE	A18 P/O P1 - 2		A19 P1 - 2		NC		034
	RIGHT FLEX, SCOPE	A18 P/O P1 - 3		A19 P1 - 3		GND		034
	RIGHT FLEX, SCOPE	A18 P/O P1 - 4		A19 P1 - 4		NC		034
	RIGHT FLEX, SCOPE	A18 P/O P1 - 5		A19 P1 - 5		$\overline{\text{ANT SEL}}$		034
	RIGHT FLEX, SCOPE	A18 P/O P1 - 6		A19 P1 - 6		NC		034
	RIGHT FLEX, SCOPE	A18 P/O P1 - 7		A19 P1 - 7		GND		034
	RIGHT FLEX, SCOPE	A18 P/O P1 - 8		A19 P1 - 8		5 VDC + AM MOD		034
	RIGHT FLEX, SCOPE	A18 P/O P1 - 9		A19 P1 - 9		AM MOD + DC REF (I)		034
	RIGHT FLEX, SCOPE	A18 P/O P1 - 10		A19 P1 - 10		FOCUS LVL		034
	RIGHT FLEX, SCOPE	A18 P/O P1 - 11		A19 P1 - 11		INTENSITY LVL		034
	RIGHT FLEX, SCOPE	A18 P/O P1 - 12		A19 P1 - 12		−5V		034
	RIGHT FLEX, SCOPE	A18 P/O P1 - 13		A19 P1 - 13		+5V		034
	RIGHT FLEX, SCOPE	A18 P/O P1 - 14		A19 P1 - 14		NC		034
	RIGHT FLEX, SCOPE	A18 P/O P1 - 15		A19 P1 - 15		+8V		034
	RIGHT FLEX, SCOPE	A18 P/O P1 - 16		A19 P1 - 16		SWP VERNIER VOLT		034
	RIGHT FLEX, SCOPE	A18 P/O P1 - 17		A19 P1 - 17		DISPERSION SWP RTN		034
	RIGHT FLEX, SCOPE	A18 P/O P1 - 18		A19 P1 - 18		DISPERSION SWP RTN		034
	RIGHT FLEX, SCOPE	A18 P/O P1 - 19		A19 P1 - 19		SYNTH SWP		034
	RIGHT FLEX, SCOPE	A18 P/O P1 - 20		A19 P1 - 20		SYNTH SWP		034
	RIGHT FLEX, SCOPE	A18 P/O P1 - 21		A19 P1 - 21		DISPERSION SWP		034
	RIGHT FLEX, SCOPE	A18 P/O P1 - 22		A19 P1 - 22		DISPERSION SWP		034
	RIGHT FLEX, SCOPE	A18 P/O P1 - 23		A19 P1 - 23		−5V		034
	RIGHT FLEX, SCOPE	A18 P/O P1 - 24		A19 P1 - 24		−5V		034
	RIGHT FLEX, SCOPE	A18 P/O P1 - 25		A19 P1 - 25		HORIZ POS		034
	RIGHT FLEX, SCOPE	A18 P/O P1 - 26		A19 P1 - 26		HORIZ POS		034
	RIGHT FLEX, SCOPE	A18 P/O P1 - 27		A19 P1 - 27		NC		034
	RIGHT FLEX, SCOPE	A18 P/O P1 - 28		A19 P1 - 28		NC		034
	RIGHT FLEX, SCOPE	A18 P/O P1 - 29		A19 P1 - 29		+5V		034
	RIGHT FLEX, SCOPE	A18 P/O P1 - 30		A19 P1 - 30		+5V		034
	RIGHT FLEX, SCOPE	A18 P/O P1 - 31		A19 P1 - 31		GND		034
	RIGHT FLEX, SCOPE	A18 P/O P1 - 32		A19 P1 - 32		GND		034
	RIGHT FLEX, SCOPE	A18 P/O P1 - 33		A19 P1 - 33		NC		034
	RIGHT FLEX, SCOPE	A18 P/O P1 - 34		A19 P1 - 34		AUTO/NORM TRIG		034
	RIGHT FLEX, SCOPE	A18 P/O P1 - 35		A19 P1 - 35		−5V		034
	RIGHT FLEX, SCOPE	A18 P/O P1 - 36		A19 P1 - 36		−5V		034
	RIGHT FLEX, SCOPE	A18 P/O P1 - 37		A19 P1 - 37		TRIG LVL		034
	RIGHT FLEX, SCOPE	A18 P/O P1 - 38		A19 P1 - 38		TRIG LVL		034
	RIGHT FLEX, SCOPE	A18 P/O P1 - 39		A19 P1 - 39		VERT POS		034
	RIGHT FLEX, SCOPE	A18 P/O P1 - 40		A19 P1 - 40		VERT POS		034
	RIGHT FLEX, SCOPE	A18 P/O P1 - 41		A19 P1 - 41		VERT GAIN		034
	RIGHT FLEX, SCOPE	A18 P/O P1 - 42		A19 P1 - 42		VERT GAIN		034
	RIGHT FLEX, SCOPE	A18 P/O P1 - 43		A19 P1 - 43		VERT GAIN RTN		034
	RIGHT FLEX, SCOPE	A18 P/O P1 - 44		A19 P1 - 44		VERT GAIN RTN		034
	RIGHT FLEX, SCOPE	A18 P/O P1 - 45		A19 P1 - 45		OPTICAL ENC A		034

Table 5-2r. System Wirelist – Front Panel Assembly (A18) (Cont)

1	2	3	4	5	6	7	8	9
WIRE NO.	COLOR SIZE AWG	WIRE RUNS FROM	NOTE OR VIEW	TO	NOTE OR VIEW	FUNCTION ROUTING REMARKS	APPROX LENGTH (INCHES)	USE FIND NO.
	RIGHT FLEX, SCOPE	A18 P/O P1 - 46		A19 P1 - 46		NC		034
	RIGHT FLEX, SCOPE	A18 P/O P1 - 47		A19 P1 - 47		OPTICAL ENC B		034
	RIGHT FLEX, SCOPE	A18 P/O P1 - 48		A19 P1 - 48		NC		034
	RIGHT FLEX, SCOPE	A18 P/O P1 - 49		A19 P1 - 49		10V/DIV RNG SEL		034
	RIGHT FLEX, SCOPE	A18 P/O P1 - 50		A19 P1 - 50		10V/DIV RNG SEL		034
	RIGHT FLEX, SCOPE	A18 P/O P1 - 51		A19 P1 - 51		1V/DIV RNG SEL		034
	RIGHT FLEX, SCOPE	A18 P/O P1 - 52		A19 P1 - 52		1V/DIV RNG SEL		034
	RIGHT FLEX, SCOPE	A18 P/O P1 - 53		A19 P1 - 53		0.1V/DIV RNG SEL		034
	RIGHT FLEX, SCOPE	A18 P/O P1 - 54		A19 P1 - 54		0.1V/DIV RNG SEL		034
	RIGHT FLEX, SCOPE	A18 P/O P1 - 55		A19 P1 - 55		GND		034
	RIGHT FLEX, SCOPE	A18 P/O P1 - 56		A19 P1 - 56		GND		034
	RIGHT FLEX, SCOPE	A18 P/O P1 - 57		A19 P1 - 57		0.01V/DIV RNG SEL		034
	RIGHT FLEX, SCOPE	A18 P/O P1 - 58		A19 P1 - 58		0.01V/DIV RNG SEL		034
	RIGHT FLEX, SCOPE	A18 P/O P1 - 59		A19 P1 - 59		HORIZ INPUT		034
	RIGHT FLEX, SCOPE	A18 P/O P1 - 60		A19 P1 - 60		HORIZ INPUT		034
	LEFT FLEX, DISPLAY	A18 P/O P2 - 1		A19 P2 - 1		+12V		033
	LEFT FLEX, DISPLAY	A18 P/O P2 - 2		A19 P2 - 2		SQUELCH LVL		033
	LEFT FLEX, DISPLAY	A18 P/O P2 - 3		A19 P2 - 3		VOL CNTL AUDIO RTN		033
	LEFT FLEX, DISPLAY	A18 P/O P2 - 4		A19 P2 - 4		VOL CNTL AUDIO		033
	LEFT FLEX, DISPLAY	A18 P/O P2 - 5		A19 P2 - 5		WB/NB		033
	LEFT FLEX, DISPLAY	A18 P/O P2 - 6		A19 P2 - 6		NC		033
	LEFT FLEX, DISPLAY	A18 P/O P2 - 7		A19 P2 - 7		EXT HORIZ SEL		033
	LEFT FLEX, DISPLAY	A18 P/O P2 - 8		A19 P2 - 8		100 MS/DIV SWP SEL		033
	LEFT FLEX, DISPLAY	A18 P/O P2 - 9		A19 P2 - 9		10 MS/DIV SWP SEL		033
	LEFT FLEX, DISPLAY	A18 P/O P2 - 10		A18 P2 - 10		1 MS/DIV SWP SEL		033
	LEFT FLEX, DISPLAY	A18 P/O P2 - 11		A19 P2 - 11		100 µS/DIV SWP SEL		033
	LEFT FLEX, DISPLAY	A18 P/O P2 - 12		A19 P2 - 12		10 µS/DIV SWP SEL		033
	LEFT FLEX, DISPLAY	A18 P/O P2 - 13		A19 P2 - 13		1 µS/DIV SWP SEL		033
	LEFT FLEX, DISPLAY	A18 P/O P2 - 14		A19 P2 - 14		NC		033
	LEFT FLEX, DISPLAY	A18 P/O P2 - 15		A19 P2 - 15		+5V		033
	LEFT FLEX, DISPLAY	A18 P/O P2 - 16		A19 P2 - 16		GND		033
	LEFT FLEX, DISPLAY	A18 P/O P2 - 17		A19 P2 - 17		SIG PRES LED		033
	LEFT FLEX, DISPLAY	A18 P/O P2 - 18		A19 P2 - 18		BFO FREQ CNTL		033
	LEFT FLEX, DISPLAY	A18 P/O P2 - 19		A19 P2 - 19		GND		033
	LEFT FLEX, DISPLAY	A18 P/O P2 - 20		A19 P2 - 20		GND		033
	LEFT FLEX, DISPLAY	A18 P/O P2 - 21		A19 P2 - 21		MON/GEN		033
	LEFT FLEX, DISPLAY	A18 P/O P2 - 22		A19 P2 - 22		NC		033
	LEFT FLEX, DISPLAY	A18 P/O P2 - 23		A19 P2 - 23		IMAGE HI/LO		033
	LEFT FLEX, DISPLAY	A18 P/O P2 - 24		A19 P2 - 24		NC		033
	LEFT FLEX, DISPLAY	A18 P/O P2 - 25		A19 P2 - 25		NC		033
	LEFT FLEX, DISPLAY	A18 P/O P2 - 26		A19 P2 - 26		NC		033
	LEFT FLEX, DISPLAY	A18 P/O P2 - 27		A19 P2 - 27		HDST AUDIO		033
	LEFT FLEX, DISPLAY	A18 P/O P2 - 28		A19 P2 - 28		NC		033
	LEFT FLEX, DISPLAY	A18 P/O P2 - 29		A19 P2 - 29		MIC INPUT		033
	LEFT FLEX, DISPLAY	A18 P/O P2 - 30		A19 P2 - 30		NC		033
	LEFT FLEX, DISPLAY	A18 P/O P2 - 31		A19 P2 - 31		NC		033
	LEFT FLEX, DISPLAY	A18 P/O P2 - 32		A19 P2 - 32		NC		033

Table 5-2r. System Wirelist – Front Panel Assembly (A18) (Cont)

1	2	3	4	5	6	7	8	9
WIRE NO.	COLOR SIZE AWG	WIRE RUNS FROM	NOTE OR VIEW	TO	NOTE OR VIEW	FUNCTION ROUTING REMARKS	APPROX LENGTH (INCHES)	USE FIND NO.
	LEFT FLEX, DISPLAY	A18 P/O P2 - 33		A19 P2 - 33		NC		033
	LEFT FLEX, DISPLAY	A18 P/O P2 - 34		A19 P2 - 34		NC		033
	LEFT FLEX, DISPLAY	A18 P/O P2 - 35		A19 P2 - 35		NC		033
	LEFT FLEX, DISPLAY	A18 P/O P2 - 36		A19 P2 - 36		NC		033
	LEFT FLEX, DISPLAY	A18 P/O P2 - 37		A19 P2 - 37		NC		033
	LEFT FLEX, DISPLAY	A18 P/O P2 - 38		A19 P2 - 38		NC		033
	LEFT FLEX, DISPLAY	A18 P/O P2 - 39		A19 P2 - 39		NC		033
	LEFT FLEX, DISPLAY	A18 P/O P2 - 40		A19 P2 - 40		NC		033
	LEFT FLEX, DISPLAY	A18 P/O P2 - 41		A19 P2 - 41		NC		033
	LEFT FLEX, DISPLAY	A18 P/O P2 - 42		A19 P2 - 42		NC		033
	LEFT FLEX, DISPLAY	A18 P/O P2 - 43		A19 P2 - 43		NC		033
	LEFT FLEX, DISPLAY	A18 P/O P2 - 44		A19 P2 - 44		NC		033
	LEFT FLEX, DISPLAY	A18 P/O P2 - 45		A19 P2 - 45		NC		033
	LEFT FLEX, DISPLAY	A18 P/O P2 - 46		A19 P2 - 46		NC		033
	LEFT FLEX, DISPLAY	A18 P/O P2 - 47		A19 P2 - 47		INT MOD (I)		033
	LEFT FLEX, DISPLAY	A18 P/O P2 - 48		A19 P2 - 48		INT MOD (I)		033
	LEFT FLEX, DISPLAY	A18 P/O P2 - 49		A19 P2 - 49		INT MOD RTN (I)		033
	LEFT FLEX, DISPLAY	A18 P/O P2 - 50		A19 P2 - 50		INT MOD RTN (I)		033
	LEFT FLEX, DISPLAY	A18 P/O P2 - 51		A19 P2 - 51		GND		033
	LEFT FLEX, DISPLAY	A18 P/O P2 - 52		A19 P2 - 52		GND		033
	LEFT FLEX, DISPLAY	A18 P/O P2 - 53		A19 P2 - 53		1 KHZ SINE RTN (I)		033
	LEFT FLEX, DISPLAY	A18 P/O P2 - 54		A19 P2 - 54		1 KHZ SINE RTN (I)		033
	LEFT FLEX, DISPLAY	A18 P/O P2 - 55		A19 P2 - 55		1 KHZ SINE (I)		033
	LEFT FLEX, DISPLAY	A18 P/O P2 - 56		A19 P2 - 56		EXT MOD RTN (I)		033
	LEFT FLEX, DISPLAY	A18 P/O P2 - 57		A19 P2 - 57		+5V		033
	LEFT FLEX, DISPLAY	A18 P/O P2 - 58		A19 P2 - 58		EXT MOD (I)		033
	LEFT FLEX, DISPLAY	A18 P/O P2 - 59		A19 P2 - 59		GND		033
	LEFT FLEX, DISPLAY	A18 P/O P2 - 60		A19 P2 - 60		GND		033
A18055	RIBBON CABLE	A18A1 J1 - 1		A15 J1 - 1		AF DATA BUS 0		055
A18055	RIBBON CABLE	A18A1 J1 - 2		A15 J1 - 2		AF DATA BUS 1		055
A18055	RIBBON CABLE	A18A1 J1 - 3		A15 J1 - 3		AF DATA BUS 3		055
A18055	RIBBON CABLE	A18A1 J1 - 4		A15 J1 - 4		AF DATA BUS 2		055
A18055	RIBBON CABLE	A18A1 J1 - 5		A15 J1 - 5		$\overline{\text{LS 1}}$		055
A18055	RIBBON CABLE	A18A1 J1 - 6		A15 J1 - 6		$\overline{\text{LS 2}}$		055
A18055	RIBBON CABLE	A18A1 J1 - 7		A15 J1 - 7		OVEN LED ANODE		055
A18055	RIBBON CABLE	A18A1 J1 - 8		A15 J1 - 8		OVEN LED CATHODE		055
A18055	RIBBON CABLE	A18A1 J1 - 9		A15 J1 - 9		DC LED CATHODE		055
A18055	RIBBON CABLE	A18A1 J1 - 10		A15 J1 - 10		DC LED ANODE		055
A18055	RIBBON CABLE	A18A1 J1 - 11		A15 J1 - 11		AC LED		055
A18055	RIBBON CABLE	A18A1 J1 - 12		A15 J1 - 12		$\overline{\text{LS 0}}$		055
A18055	RIBBON CABLE	A18A1 J1 - 13		A15 J1 - 13		+5V		055
A18055	RIBBON CABLE	A18A1 J1 - 14		A15 J1 - 14		+5V		055
A18055	RIBBON CABLE	A18A1 J1 - 15		A15 J1 - 15		GND		055
A18055	RIBBON CABLE	A18A1 J1 - 16		A15 J1 - 16		GND		055
A18055	RIBBON CABLE	A18A1 J2 - 1		A15 J2 - 1		ROW 4		055
A18055	RIBBON CABLE	A18A1 J2 - 2		A15 J2 - 2		ROW 3		055
A18055	RIBBON CABLE	A18A1 J2 - 3		A15 J2 - 3		NC		055

Table 5-2r. System Wirelist – Front Panel Assembly (A18) (Cont)

1	2		3	4	5	6	7	8	9
WIRE NO.	COLOR	SIZE AWG	WIRE RUNS FROM	NOTE OR VIEW	TO	NOTE OR VIEW	FUNCTION ROUTING REMARKS	APPROX LENGTH (INCHES)	USE FIND NO.
A18055	RIBBON CABLE		A18A1 J2 - 4		A15 J2 - 4		COLUMN 3		055
A18055	RIBBON CABLE		A18A1 J2 - 5		A15 J2 - 5		ROW 1		055
A18055	RIBBON CABLE		A18A1 J2 - 6		A15 J2 - 6		ROW 2		055
A18055	RIBBON CABLE		A18A1 J2 - 7		A15 J2 - 7		COLUMN 0		055
A18055	RIBBON CABLE		A18A1 J2 - 8		A15 J2 - 8		COLUMN 1		055
A18055	RIBBON CABLE		A18A1 J2 - 9		A15 J2 - 9		COLUMN 2		055
A18055	RIBBON CABLE		A18A1 J2 - 10		A15 J2 - 10		ROW 0		055
A18055	RIBBON CABLE		A18A1 J2 - 11		A15 J2 - 11		$\overline{\text{CSSG CONT}}$		055
A18055	RIBBON CABLE		A18A1 J2 - 12		A15 J2 - 12		$\overline{\text{CSSG BURST}}$		055
A18055	RIBBON CABLE		A18A1 J2 - 13		A15 J2 - 13		$\overline{\text{POWER OFF}}$		055
A18055	RIBBON CABLE		A18A1 J2 - 14		A15 J2 - 14		$\overline{\text{POWER ON}}$		055
A18055	RIBBON CABLE		A18A1 J2 - 15		A15 J2 - 15		MON/GEN		055
A18055	RIBBON CABLE		A18A1 J2 - 16		A15 J2 - 16		SPARE BIT		055
W5	RIBBON CABLE		A18A1 J4 - 1		A18A2 J3 - 1		$\overline{\text{CSSG BURST EN}}$		052
W5	RIBBON CABLE		A18A1 J4 - 2		A18A2 J3 - 2		GND		052
W5	RIBBON CABLE		A18A1 J4 - 3		A18A2 J3 - 3		GND		052
W5	RIBBON CABLE		A18A1 J4 - 4		A18A2 J3 - 4		NC		052
W5	RIBBON CABLE		A18A1 J4 - 5		A18A2 J3 - 5		MON/GEN		052
W5	RIBBON CABLE		A18A1 J4 - 6		A18A2 J3 - 6		$\overline{\text{POWER ON EN}}$		052
W5	RIBBON CABLE		A18A1 J4 - 7		A18A2 J3 - 7		$\overline{\text{POWER OFF EN}}$		052
W5	RIBBON CABLE		A18A1 J4 - 8		A18A2 J3 - 8		$\overline{\text{CSSG CONT EN}}$		052
	COAX CABLE		A18 J3		A19 E1		EXT MOD IN		005
	COAX CABLE		A18 J4		A19 E2		MOD OUT		005
	COAX CABLE		A18 J6		A19 E3		DEMOD OUT		006
	COAX CABLE		A18 J7		A19 E8		EXT INPUT		005

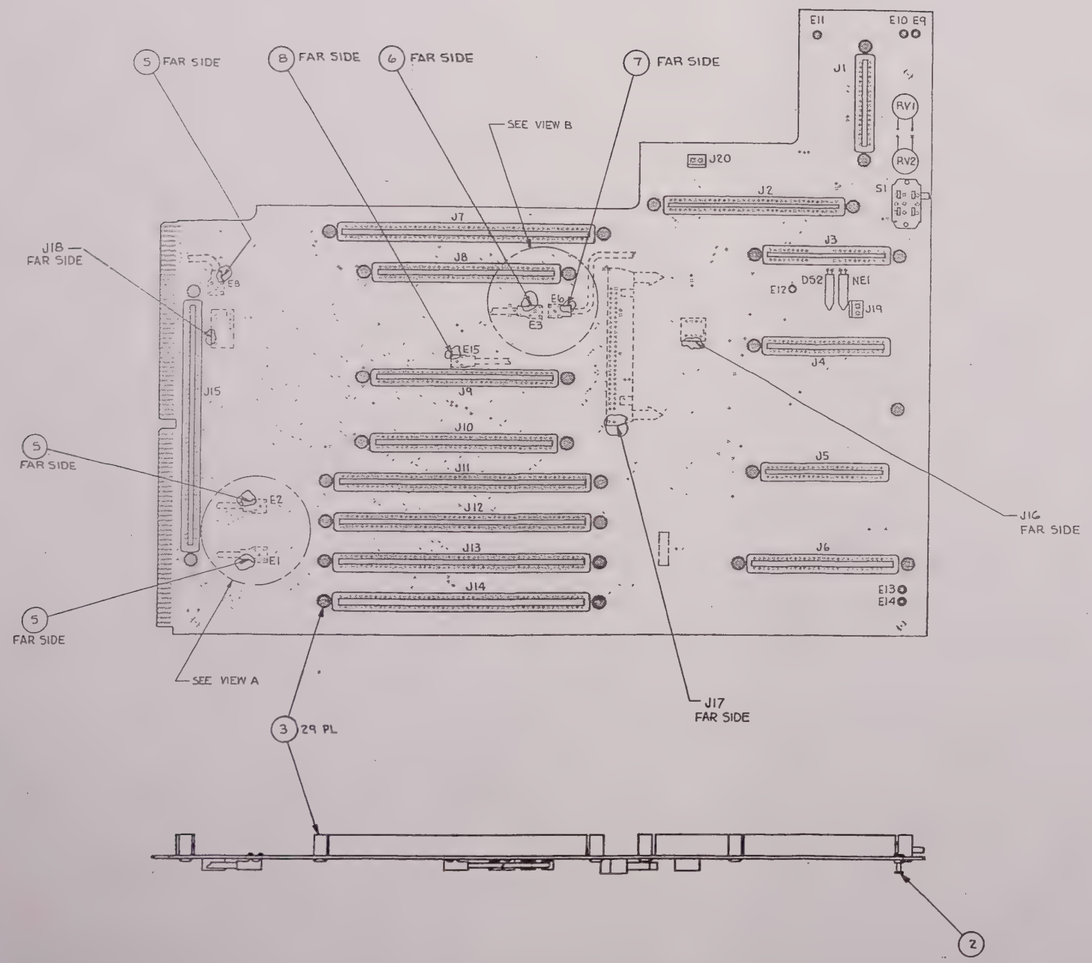

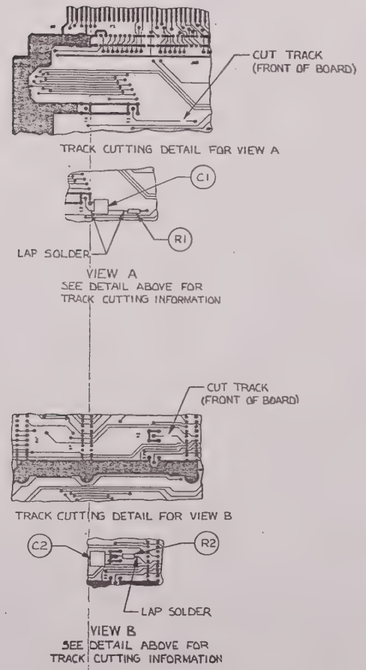

SYSTEM MOTHERBOARD (A19)

Find No.	Qty. Req.	Part No.	Nomenclature	Part Value
002	6	29-80375B41	TERMINAL	
003	29	43-80375B30	STANDOFF	
005	3	30-80343B97	CABLE ASSEMBLY	A18/A19
006	1	30-80343B98	CABLE ASSEMBLY	A18J24/A19E3
007	1	30-80343B99	CABLE ASSEMBLY	A19E8/SPEAKER
008	1	30-80344B01	CABLE ASSEMBLY	A19E15/A16J1
C 001	1	21-80344B38	CAPACITOR	.047UF-10-100
C 002	1	21-80344B38	CAPACITOR	.047UF-10-100
DS001	1	65-80339B07	LAMP, NEON	
DS002	1	65-80339B07	LAMP, NEON	
J 001	1	09-80340B36	CONNECTOR	
J 002	1	09-80340B41	CONNECTOR	
J 003	1	09-80340B39	CONNECTOR	
J 004	1	09-80340B39	CONNECTOR	
J 005	1	09-80340B39	CONNECTOR	
J 006	1	09-80340B40	CONNECTOR	
J 007	1	09-80340B43	CONNECTOR	
J 008	1	09-80340B41	CONNECTOR	
J 009	1	09-80340B41	CONNECTOR	
J 010	1	09-80340B41	CONNECTOR	
J 011	1	09-80340B43	CONNECTOR	
J 012	1	09-80340B43	CONNECTOR	
J 013	1	09-80340B43	CONNECTOR	
J 014	1	09-80340B43	CONNECTOR	
J 015	1	09-80340B43	CONNECTOR	
J 016	1	09-80331A95	SOCKET, SOLDER DIP	8 PIN
J 017	1	28-80343B55	CONNECTOR	
J 018	1	09-80331A96	SOCKET, SOLDER DIP	14 PIN
J 019	1	09-80372B68	2-PIN CONNECTOR	
J 020	1	09-80372B68	2-PIN CONNECTOR	
NE 001	1	65-80339B07	NEON LAMP	
R 001	1	06-00124A11	RESISTOR	27-5-1/4
R 002	1	06-00124A11	RESISTOR	27-5-1/4
RV001	1	06-80339B83	VARISTOR	
RV002	1	06-80339B83	VARISTOR	
S 001	1	40-80339B84	SWITCH	
005		Cable Assembly (A18/A19) 30-80343B97		
	1	28-80342B90	CONNECTOR, BNC	
006		Cable Assembly (A18J24/A19E3) 30-80343B98		
	1	28-80342B90	CONNECTOR, BNC	

SYSTEM MOTHERBOARD (A19)

Figure 5-1a. Printed Wiring Board Assembly and Parts List (Sheet 1 of 2)

SYSTEM MOTHERBOARD (A19)

Figure 5-1b. Printed Wiring Board Assembly and Parts List (Sheet 2 of 2)

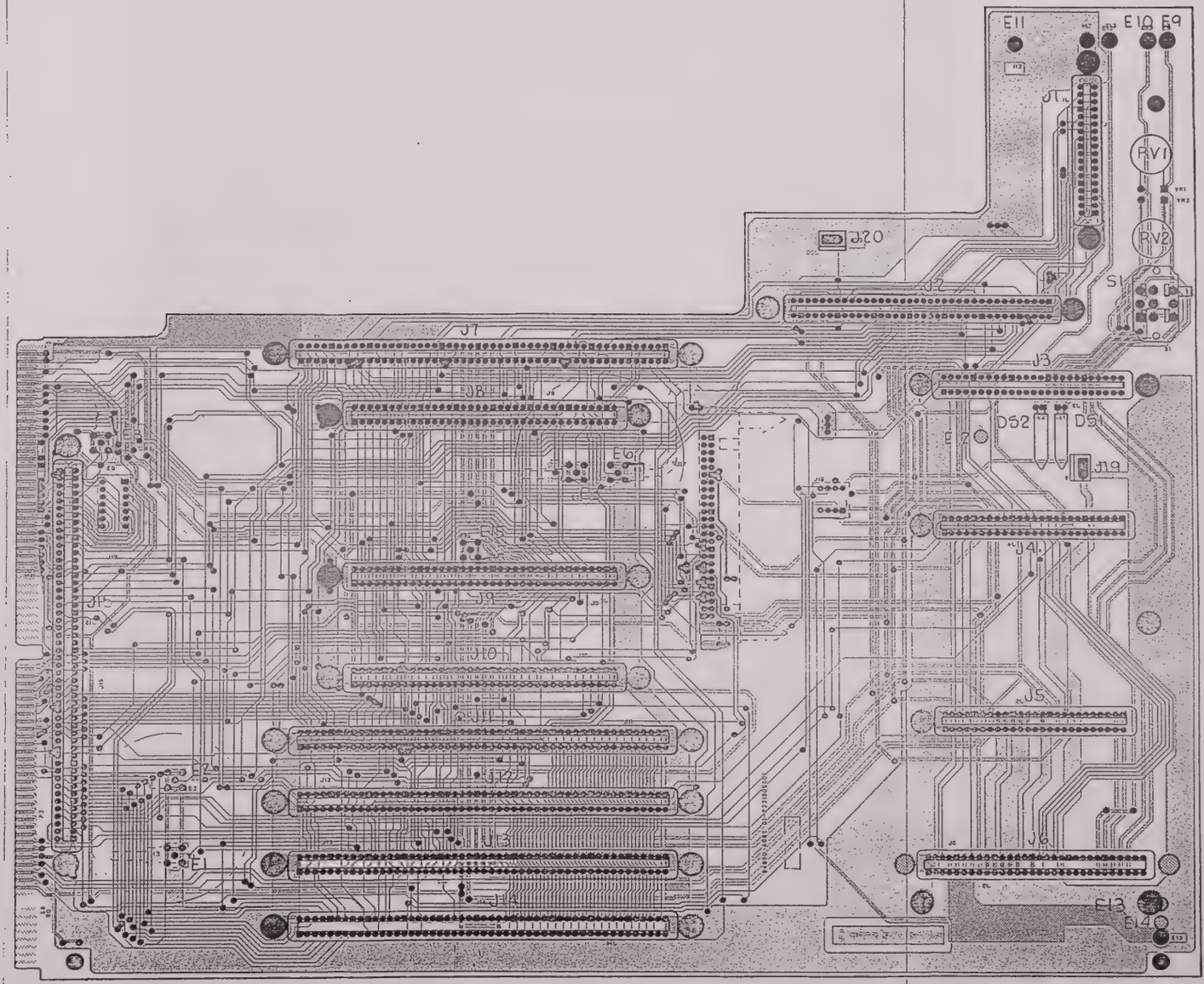

COMPONENTS AND COMPONENT SIDE TRACK SHOWN IN BLACK.

SOLDER-SIDE TRACK SHOWN IN ORANGE

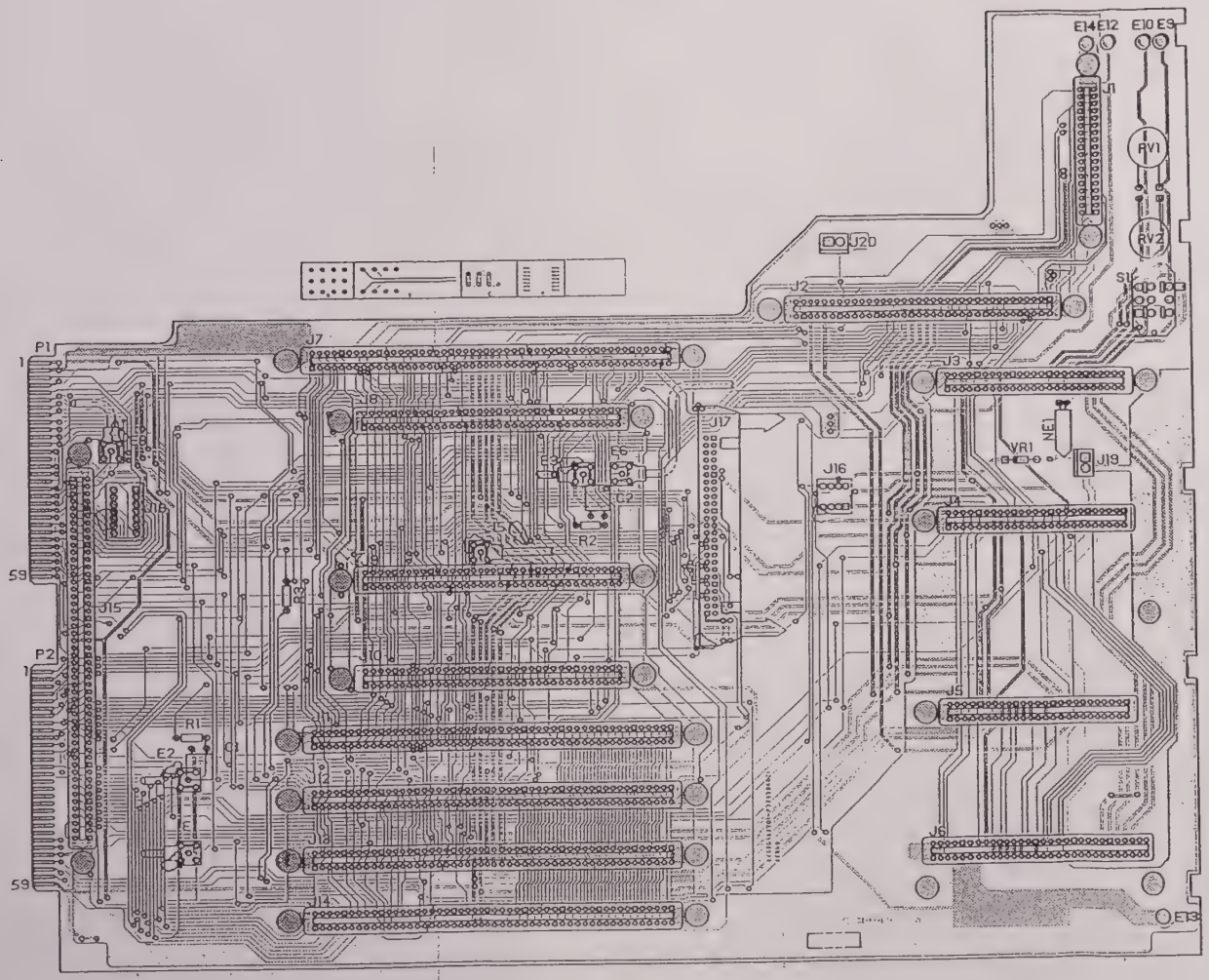

COMPONENTS AND COMPONENT SIDE TRACK SHOWN IN BLACK. SOLDER-SIDE TRACK SHOWN IN ORANGE.

5-96
(2 of 2)

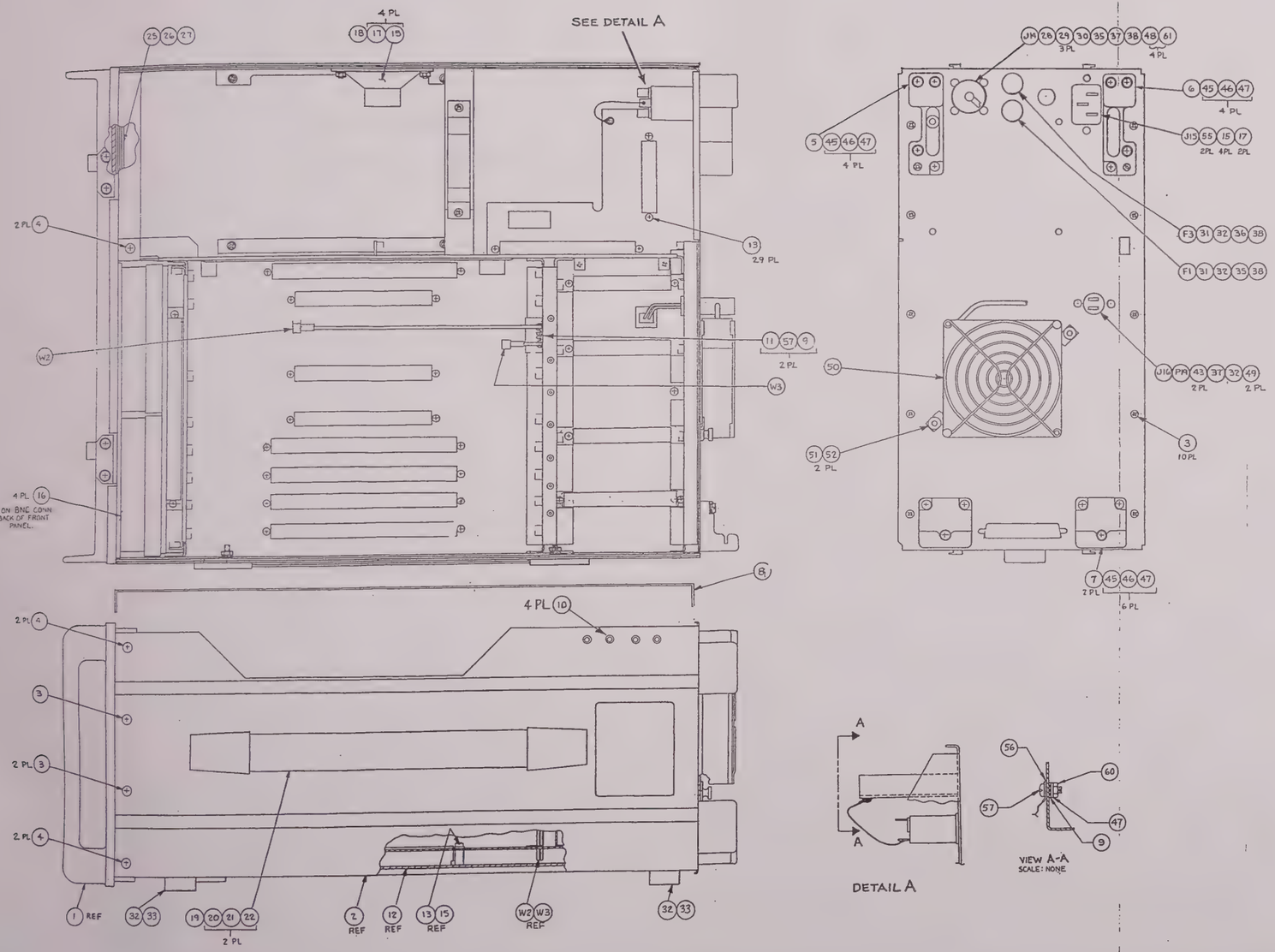

CHASSIS ASSEMBLY

Find No.	Qty. Req.	Part No.	Nomenclature	Part Value
003	13	03-80341B37	PH W/ASSEMBLED WASHER	6-32X.312
004	6	03-136722	SCREW	.138-32X.187
005	1	75-80343B05	FOOT,TOP	
006	1	75-80343B06	FOOT,BOTTOM	
007	2	75-80343B07	FOOT,BATTERY HOLDER,LG	
008	1	01-80341B34	COVER, TOP	
009	3	04-2645	WASHER, EXTERNAL LOCK #6	.138
010	4	03-139461	SCREW	.112-40X.250
011	2	42-80343B08	RETAINER	
013	29	03-129841	SCREW, PH W/CAPT LOCK WASHER	4-40X.250
015	8	04-7667	WASHER, LOCK	.112
016	4	04-2635	WASHER, LOCK	.500
017	6	02-115547	NUT	.112-40
018	1	50-83205B03	SPEAKER	
019	1	55-80343B39	HANDLE	
020	2	04-80341B98	WASHER	
021	2	04-400368	WASHER, LOCK	.190
022	2	02-115692	NUT	.190-32
025	1	51-80331A44	WINDOW,EMI	
026	1	51-80381A42	CRT GRATICLE	
027	1	26-P08059V1	SHIELD, FRONT CRT	
028	1	38-80370A52	SEALING CAP	
029	3	39-80375B25	CONTACT, PIN	
030	1	39-80375B25	CONTACT, PIN	
031	2	09-80344B34	FUSE HOLDER, 250 VOLT	
032	1	55-80340B44	BAIL STAND W/CLIPS	
033	6	05-80375B45	RIVET	.125X.375
043	2	39-80375B24	CONTACT	
045	14	03-139779	SCREW	.138-32X.438
046	14	04-9795	WASHER, LOCK	.138
047	15	04-80335A99	WASHER	.156
048	4	05-80375B43	POP RIVET, DOMED HD, OPEN END	
049	2	05-80375B42	POP RIVET, DOMED HD, OPEN END	
050	1	01-80341B33	FAN ASSEMBLY	
051	2	02-80375B29	NUT, THUMB, ROUND HEAD	
052	2	42-80343B20	CLIP	MOUNTING
055	2	03-136787	SCREW	.112-40X.375
056	1	29-80375B50	TERMINAL	
057	3	03-139820	SCREW	.138-32X.312
060	1	02-114704	NUT	.138-32
061	4	04-118786	WASHER	.138
F 001	1	65-00010256	FUSE	250V-10A
F 003	1	65-00020404	FUSE	250V-3A
J014	1	15-10811A07	CONNECTOR, BATTERY	4-PIN, MALE
J015	1	09-80339B05	CONNECTOR, POWER INPUT	
J016	1	09-80340B74	SOCKET, BLOWER CONNECTOR	
P019	1	39-80375B23	HOUSING, CONTACT	
W002	1	30-80344B11	CABLE ASSEMBLY	A17J5 TO A8
W003	1	30-80344B12	CABLE ASSEMBLY	A17J4 TO A9
P 001	1	09-80343B87	CONNECTOR	

FAN ASSEMBLY
01-80341B33

Find No.	Qty. Req.	Part No.	Nomenclature	Part Value
001	1	59-80339B02	FAN	
002	1	35-80341B39	GUARD, FINGER	
008	1	30-80344B20	POWER CORD	
010	1	28-80343B77	CONNECTOR, PLUG	

Figure 5-2. Assembly and Parts List

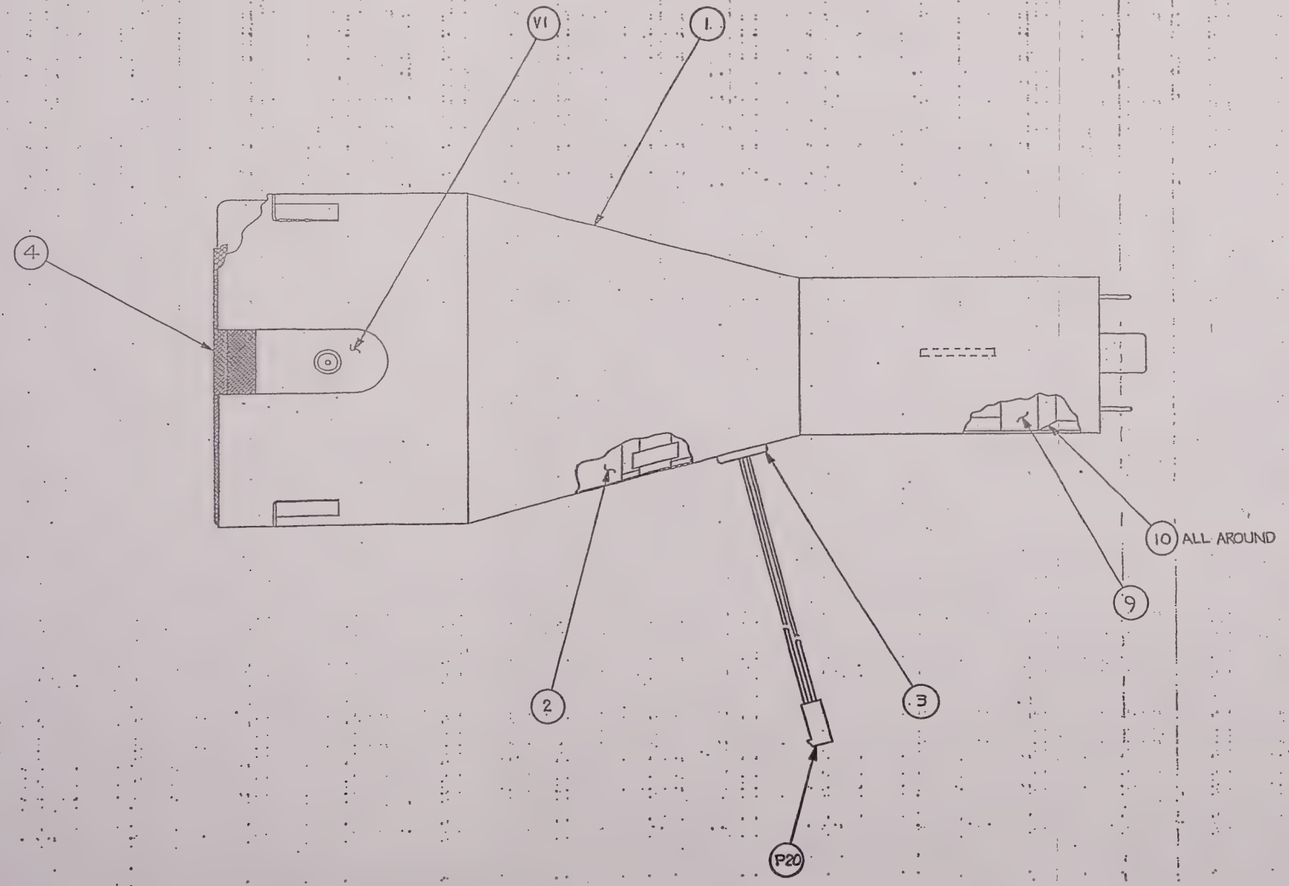

CRT ASSEMBLY

Find No.	Qty. Req.	Part No.	Nomenclature	Part Value
001	1	26-P079V1	SHIELD, CRT	
002	1	75-80335A51	ISOLATOR, FRONT CRT	
003	1	05-80375B49	GROMMET	
004	AR	30-80370A49	WIRE MESH, KNITTED	
009	1	75-80335A51	ISOLATOR, REAR CRT	
010	AR	11-14349A08	INSULATION TAPE 1" YELLOW	
P 020	1	39-80375B23	HOUSING, CONTACT	
V 001	1	96-80396A98	CATHODE RAY TUBE	

CRT ASSEMBLY

Figure 5-4. Assembly and Parts List

Figure 5-3. Assembly and Parts List

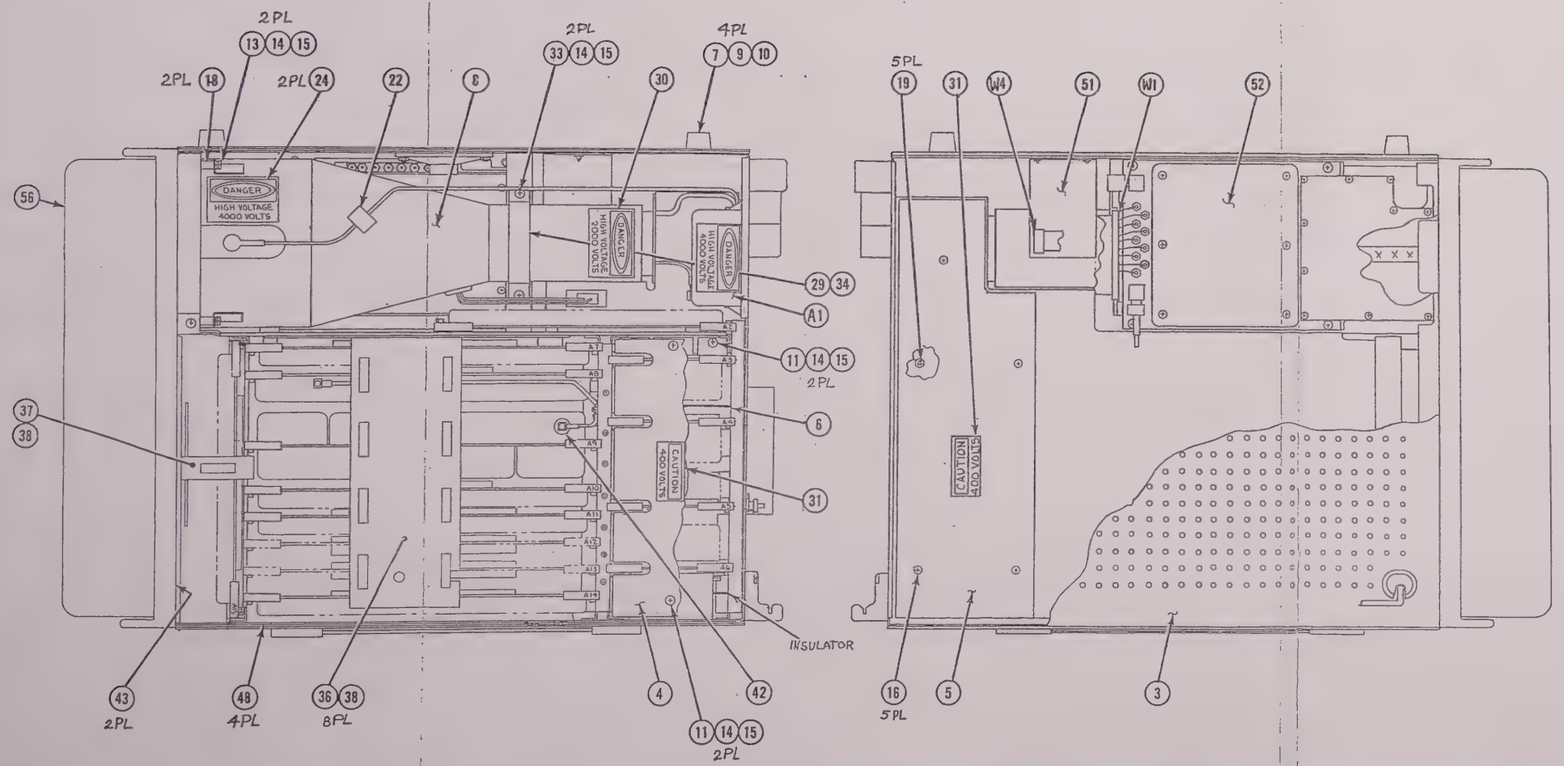

COMMUNICATIONS SYSTEM ANALYZER

Find No.	Qty. Req.	Part No.	Nomenclature	Part Value
002	1	01-80341B34	COVER ASSEMBLY,TOP	
003	1	01-80341B29	COVER ASSEMBLY,BOTTOM	
004	1	15-80370A98	COVER, LOW VOLTAGE	
005	1	26-P22206E1	SHIELD, MOTHERBOARD	
006	1	14-80370A97	INSULATOR	
007	4	75-80342B26	FOOT	
008	1	01-80375B01	CRT ASSEMBLY	
009	4	05-80375B44	RIVET	
010	4	04-7607	WASHER	
011	4	03-139749	SCREW	.138-32X.250
012	10	03-80341B37	SCREW,PH ASSEMBLED WASHER	
013	2	03-136172	SCREW	.138-32X.750
014	8	04-114441	WASHER	.155
015	8	04-80375B47	WASHER, LOCK #6	.138
016	5	03-138374	SCREW	.112-40X.187
017	4	03-139451	SCREW	.112-40X.250
018	2	43-80343B73	SPACER	
019	5	03-80343B76	STANDOFF	
022	AR	11-14348A08	INSULATION TAPE 1" YELLOW	
024	2	33-P22377E1	LABEL	
029	1	42-80375B17	CLAMP, CRT	
030	1	33-P22378E1	LABEL	
031	1	33-P22379E1	LABEL	
033	2	03-139784	SCREW	.138-32X.438
034	1	42-80375B12	PAD, CRT CLAMP	
035	1	42-80375B18	RETAINER, CARD	
037	1	42-80375B19	RETAINER, FRTPNL INT	
038	9	75-80375B28	CUSHION, CARD RETAINER	
040	4	04-80335A99	WASHER	.156
042	AR	32-80344B89	GASKET, CONNECTOR	
043	AR	32-80344B91	GASKET, MESH	
048	AR	32-80344B90	GASKET, MESH	
051	1	67-P22035E1	KIT, TCXO TIMEBASE	
052	1	67-P22047E1	KIT, STD RF INPUT	
A 001	1	RTP-1007A	HI VOLT PWR SPLY ASSY(A1)	
A 002	1	RTC-1005A	SCOPE AMPL.BD ASSY(A2)	
A 003	1	RTP-1008A	BATTERY CHARGER ASSY(A3)	
A 004	1	RTP-1009A	PWB ASSY,CONTROL BD(A4)	
A 005	1	RTP-1010A	PWB ASSY,OUTPUT BD(A5)	
A 006	1	RTP-1011A	SWITCHER ASSY(A6)	
A 007	1	RTC-1006A	SCOPE/DVM CON.BD ASSY(A7)	
A 008	1	RTL-1019A	RECEIVER ASSY(A8)	
A 009	1	RTC-1007A	SYNTHESIZER ASSY(A9)	
A 010	1	RTC-1008A	AUDIO SYNTH ASSY(A10)	
A 011	1	RTC-1009A	PROC.INTERFC BD ASSY(A11)	
A 014	1	RTC-1010A	MICROPRESSOR ASSY(A14)	
A 015	1	RTC-1011A	FR.PANEL INTRFC ASSY(A15)	
P 001	1	09-80343B57	CONNECTOR	
P 002	1	09-80343B56	CONNECTOR	
P 003	1	28-80343B47	CONNECTOR	
W 001	1	30-80344B15	CABLE ASSEMBLY	
W 004	1	30-80344B15	CABLE ASSEMBLY	A16J15 TO A15J16

Figure 5-5. Assembly and Parts List

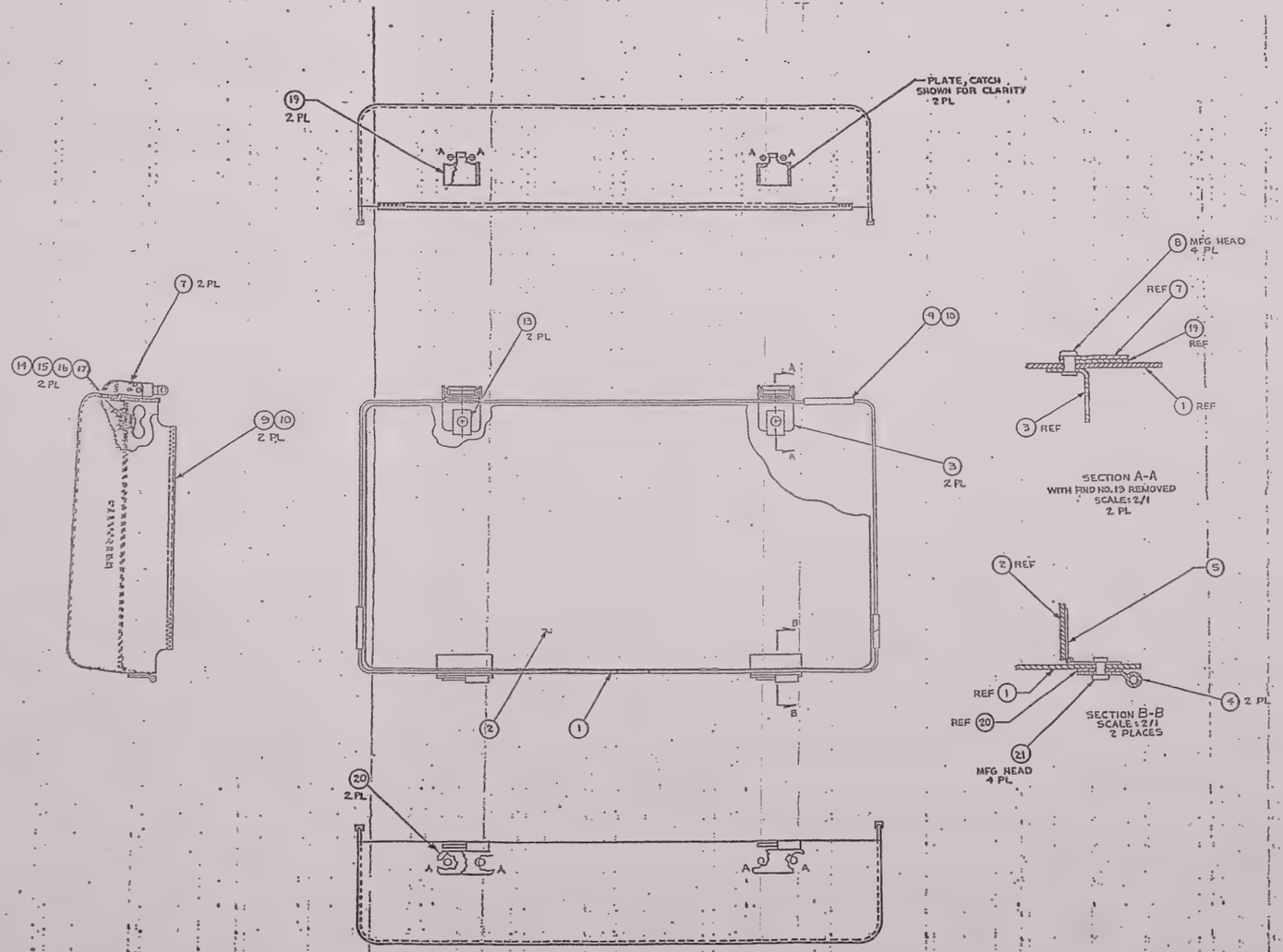

FRONT COVER

Find No.	Qty. Req.	Part No.	Nomenclature	Part Value
001	1	15-80344B67	COVER, FRONT	
002	1	15-80375B07	PARTITION	
003	2	07-80375B08	BRACKET	
004	2	55-80335A90	STOCKER, TAKE-APART	
			HINGE	
005	AR	55-80340B49	HINGE, BUTT	
007	2	55-80340B75	CATCH, ONLY	
008	4	05-80375B46	RIVET	.156X.438
009	AR	05-80375B39	GROMMET, NYLON BLACK	
013	2	55-80343B69	RECEPTACLE, CLIP-ON	
014	2	55-80343B66	STUD	
015	2	04-80343B68	WASHER	
016	2	41-80375B20	SPRING, EJECTOR	
017	2	42-80343B67	RETAINER, SPLIT RING	
018	2	43-80342B28	SPACER, CATCH	
020	2	43-80342B29	SPACER, HINGE	
021	4	05-80375B45	RIVET	.125X.375

SECTION 6.
HIGH-VOLTAGE POWER SUPPLY (A1)

6.1 DESCRIPTION

The High-Voltage Power Supply provides the CRT with bias and drive voltages. The power supply converts a nominal input voltage of 12.4 Vdc to output voltages of +4 kV and −2 kV. This power supply also contains control circuits for the CRT focus and intensity grids.

WARNING

The System Analyzer uses voltages of +4 kV and −2 kV in the High-Voltage Power Supply (A1) and near the cathode ray tube (CRT). Handle this monitor with extreme care to avoid electrical shock.

A wirelist of the High-Voltage Power Supply is shown at the end of this section in Table 6-1, a block diagram in Figure 6-1, a schematic in Figure 6-2, the printed wiring board assembly and parts list in Figure 6-3, and the assembly and parts list in Figure 6-4.

6.2 THEORY OF OPERATION

6.2.1 VOLTAGE REGULATION CIRCUIT

At the center tap of the high-voltage transformer, the chopper switches 9 Vdc through the transformer primary winding at the rate of 20 kHz. The drive signals for the chopper originate in the Low-Voltage Power Supply's Control board (A4). One secondary transformer winding provides a CRT-heater voltage of 6.3 Vac. The other transformer winding provides 1 kV, which is then doubled to 2 kV. This voltage is regulated by comparing a reference voltage of 6.3V to a voltage divider placed across the 2-kV output. The resultant signal controls the level of the dc input at the center tap of the high-voltage transformer.

6.2.2 MULTIPLIERS

The 1-kV secondary winding is multiplied by 4 and by 2. The output of the ×4 multiplier, a nominal +4.25 kV, is the CRT-anode voltage. The output of the ×2 multiplier, a nominal −2 kV, provides the cathode voltage and is applied to the intensity and focus modulators.

6.2.3 INTENSITY MODULATOR

The intensity modulator controls the grid voltage, with the control range set by VR1. The intensity modulator has two paths: one for low frequency and one for high frequency. The low-frequency path is the INTENSITY TRACKING VOLTAGE (TV), which drives the grid via an opto-isolator. This INTENSITY TV signal results from the comparison of the intensity sample signal and the high-voltage reference on the Scope Amplifier board (A2). The high-frequency path is the CRT Z-axis, which is capacitively coupled to the CRT grid.

6.2.4 FOCUS MODULATOR

In response to the focus TV input signal, the focus modulator controls the focus voltage. The control range is set by resistor R5 in the bias divider. The focus TV signal drives the focus grid via an opto-isolator.

6.2.5 TRANSIENT PROTECTOR (A1A2)

The Transient Protector provides over-voltage protection for the CRT's vertical and horizontal deflection plates. Figure 6-5 at the end of the section shows the assembly and parts list of the Transient Protector.

Table 6-1. Wirelist for the High-Voltage Power Supply

1	2		3	4	5	6	7	8	9
WIRE NO.	COLOR	SIZE AWG	WIRE RUNS FROM	NOTE OR VIEW	WIRE RUNS TO	NOTE OR VIEW	FUNCTION ROUTING REMARKS	APPROX LENGTH INCHES	USE FIND NO.
	White		A1A2 P2-1		A1A1 T1-4			10.5	4
	White		A1A2 P2-2		A1A1 P2-2			10.5	4
	White		A1A2 P2-3		A1A1 P2-3			11	4
	White		A1A2 P2-4		A1A1 P2-4			11.5	4
	White	24	A1A2 P2-5		A1A1 P2-5			12.5	5
	White	24	A1A2 P2-6		A1A1 P2-6			13	5
	White	24	A1A2 P2-7		A1A1 P2-7			13	5
	White	22	A1A2 P2-8		A1A2 8			1	2
	White	22	A1A2 P2-9		A1A2 9			1	2
	White	22	A1A2 P2-10		A1A2 10			1	2
	White	22	A1A2 P2-11		A1A2 11			1	2
	White		A1A2 P2-14		A1A1 T1-5			10.5	4
	White	24	A1A2 P2-1		A1A2 P2-2			1.5	5
	White	22	A1A2 2		P3-2			11	2
	White	22	A1A2 3		P3-3			12	2
	White	22	A1A2 4		P3-4			11.75	2
	White	22	A1A2 5		P3-5			13	2
	White	16	A1A2 7					4	3

HIGH-VOLTAGE POWER SUPPLY (A1)

(RTP-1007A)

Figure 6-1. Block Diagram

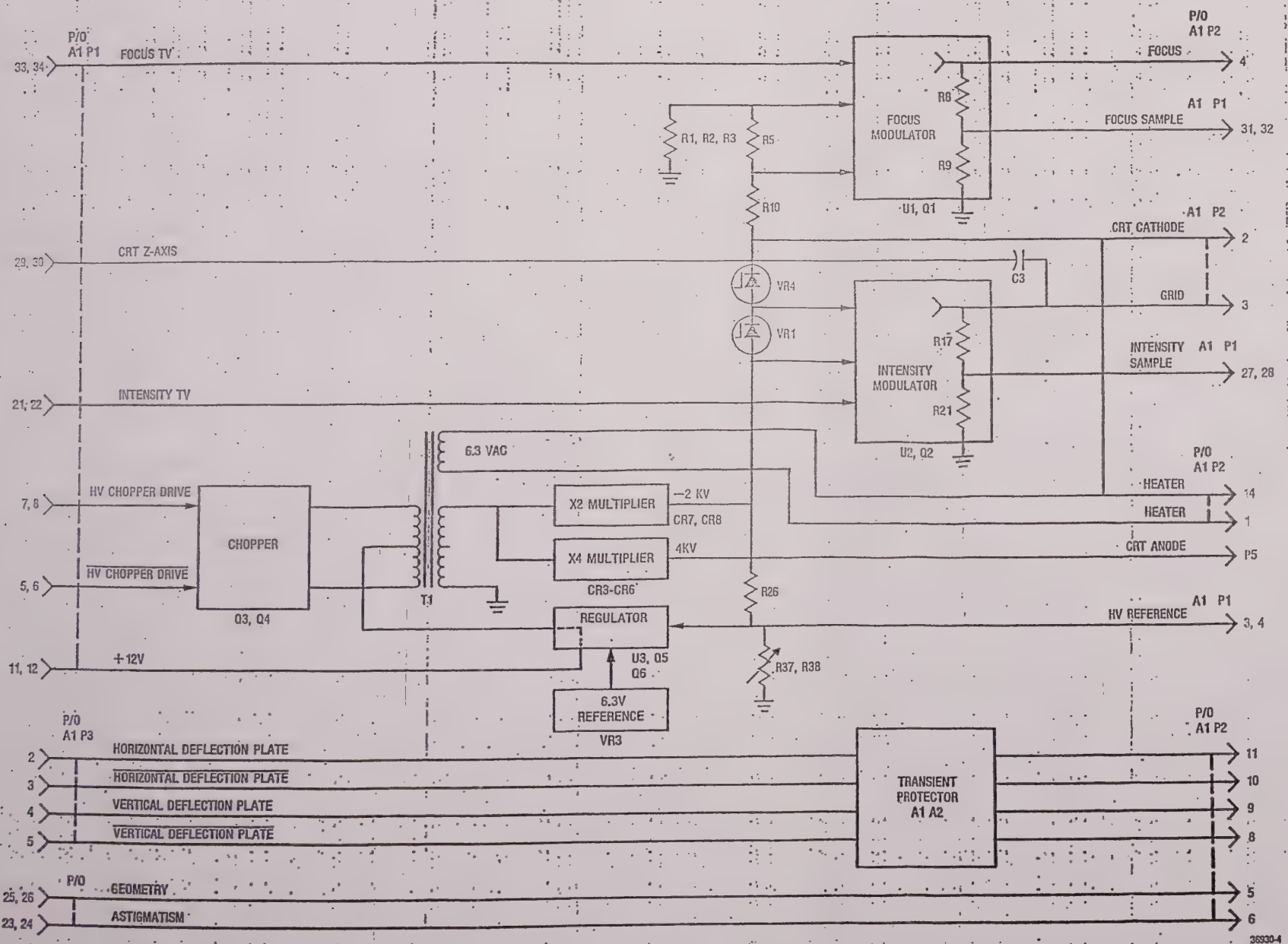

HIGH-VOLTAGE POWER SUPPLY (A1)

(RTP-1007A)

Figure 6-2. Schematic

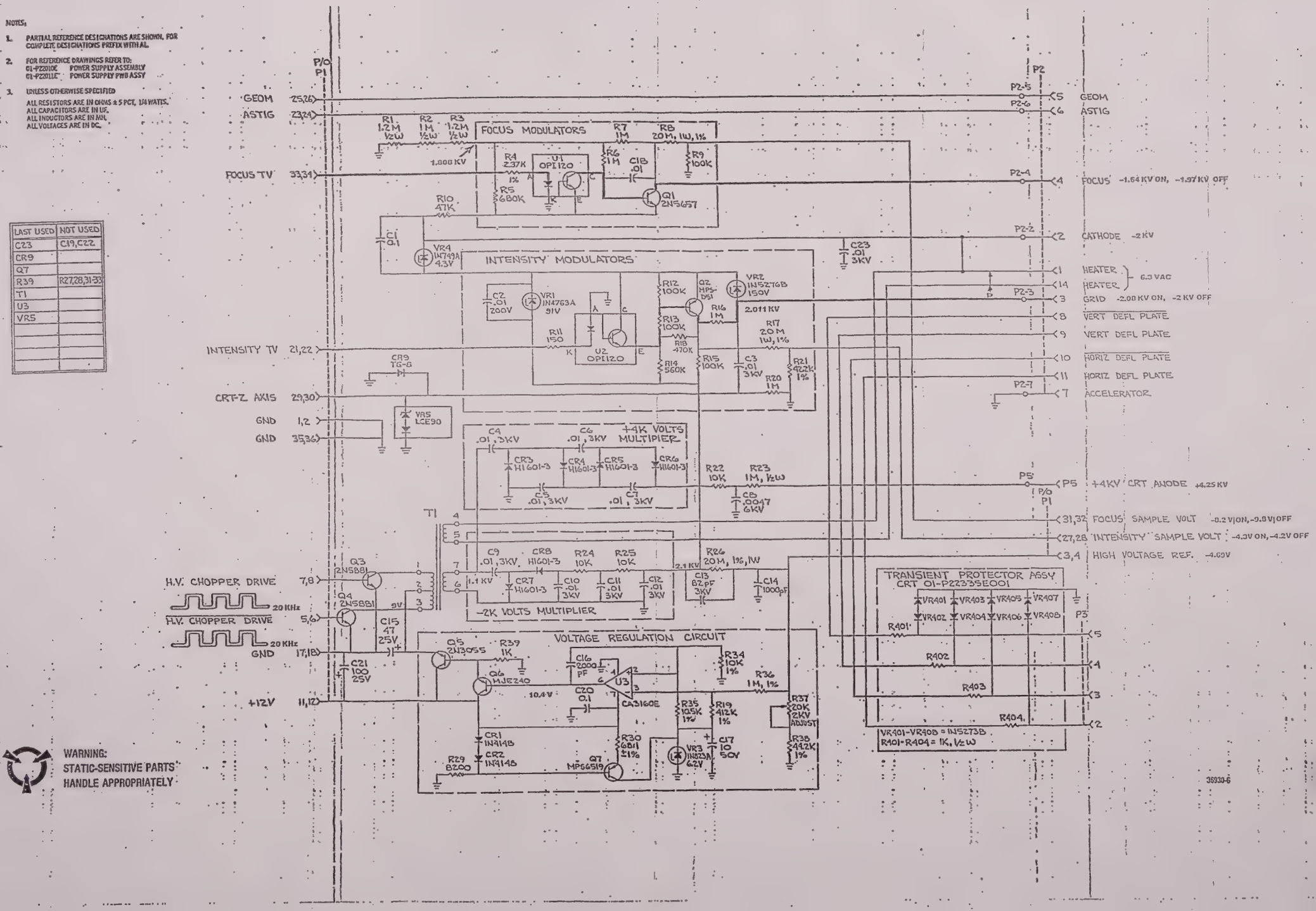

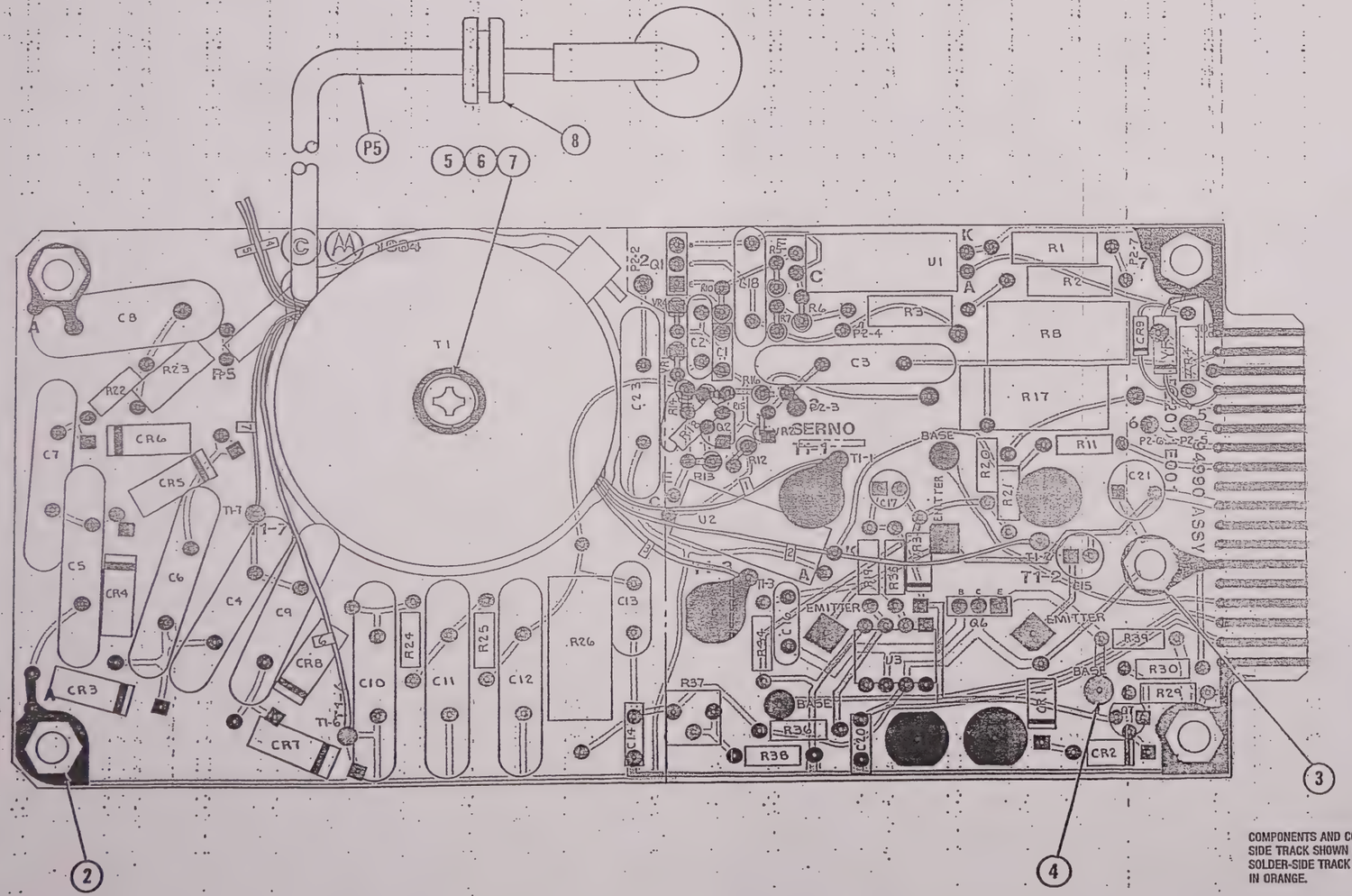

COMPONENTS AND COMPONENT SIDE TRACK SHOWN IN BLACK. SOLDER-SIDE TRACK SHOWN IN ORANGE.

HIGH-VOLTAGE POWER SUPPLY (A1A1)
RTP-1007A

Find No.	Qty. Req.	Part No.	Nomenclature	Part Value
002	1	02-14048A02	NUT (HOUSING)	
003	6	43-80375B32	SPACER, SWAGE	
004	6	09-80375B22	RECEPTACLE, COMPONENT	
005	1	03-12480S	SCREW	.138-32X1.375
006	1	04-11444I	WASHER	.159
007	1	02-80340B72	NUT, CLINCH	6-32
008	1	05-80375B48	GROMMET, RUBBER	
C001	1	21-80342B10	CAPACITOR	.1UF-20-50
C002	1	21-80356A52	CAPACITOR, CERAMIC DISC	.01UF-20-+80-200
C003	1	21-80343B45	CAPACITOR	.01UF-+80-20-3KV
C004	1	21-80343B45	CAPACITOR	.01UF-+80-20-3KV
C005	1	21-80343B45	CAPACITOR	.01UF-+80-20-3KV
C006	1	21-80343B45	CAPACITOR	.01UF-+80-20-3KV
C007	1	21-80343B45	CAPACITOR	.01UF-+80-20-3KV
C008	1	21-80363A80	CAPACITOR	.0047-5000
C009	1	21-80343B45	CAPACITOR	.01UF-+80-20-3KV
C010	1	21-80343B45	CAPACITOR	.01UF-+80-20-3KV
C011	1	21-80343B45	CAPACITOR	.01UF-+80-20-3KV
C012	1	21-80343B45	CAPACITOR	.01UF-+80-20-3KV
C013	1	21-80343B44	CAPACITOR	82PF-3KV
C014	1	21-80341B92	CAPACITOR	1000PF-10-100
C015	1	23-80341B13	CAPACITOR	47UF-20-25
C016	1	21-82428B36	CAPACITOR	2000PF-10-200
C017	1	23-80341B15	CAPACITOR	10UF-20-50
C018	1	21-82428B19	CAPACITOR	.01UF-10-500
C020	1	21-80342B10	CAPACITOR	.1UF-20-50
C021	1	23-8466SF03	CAPACITOR	100UF-20-25
C023	1	21-80343B45	CAPACITOR	.01UF-+80-20-3KV
CR001	1	48-8466K02	DIODE	
CR002	1	48-8466K02	DIODE	
CR003	1	48-80339B90	DIODE	
CR004	1	48-80339B90	DIODE	
CR005	1	48-80339B90	DIODE	
CR006	1	48-80339B90	DIODE	
CR007	1	48-80339B90	DIODE	
CR008	1	48-80339B90	DIODE	
CR009	1	MUR160	DIODE	600V, FAST RECOVERY
P005	1	30-80343B89	CABLE	HIGH VOLTAGE
Q001	1	48-00869747	TRANSISTOR	
Q002	1	48-80340B88	TRANSISTOR	MPSD51
Q006	1	48-80368A87	TRANSISTOR	
Q007	1	48-80340B85	TRANSISTOR	MPS6519
R001	1	06-00125B24	RESISTOR	1.2M-5 1/2
R002	1	06-11045B22	RESISTOR	1M-5 1/2
R003	1	06-00125B24	RESISTOR	1.2M-5 1/2
R004	1	06-10621C31	RESISTOR	2.37K-1-1/4
R005	1	06-11009D18	RESISTOR	680K-5-1/4
R006	1	06-11009D22	RESISTOR	1M-5-1/4
R007	1	06-11009D22	RESISTOR	1M-5-1/4
R008	1	06-80331A37	RESISTOR	20M-1-1
R009	1	06-11009C97	RESISTOR	100K-5-1/4
R010	1	06-11009C89	RESISTOR	47K-5-1/4
R011	1	06-11009C29	RESISTOR	150-5-1/4
R012	1	06-11009C97	RESISTOR	100K-5-1/4
R013	1	06-11009C97	RESISTOR	100K-5-1/4
R014	1	06-11009D16	RESISTOR	560K-5-1/4
R015	1	06-11009C97	RESISTOR	100K-5-1/4
R016	1	06-11009D22	RESISTOR	1M-5-1/4
R017	1	06-80331A37	RESISTOR	20M-1-1
R018	1	5043CX470K0J	RESISTOR	470K-5-1/4
R019	1	06-10621E48	RESISTOR	4.12K-1-1/4
R020	1	06-11009D22	RESISTOR	1M-5-1/4
R021	1	06-10621D52	RESISTOR	42.2K-1-1/4
R022	1	06-11009C73	RESISTOR	10K-5-1/4
R023	1	06-11045B22	RESISTOR	1M-5-1/2
R024	1	06-11009C73	RESISTOR	10K-5-1/4
R025	1	06-11009C73	RESISTOR	10K-5-1/4
R026	1	06-80331A37	RESISTOR	20M-1-1
R029	1	06-11009C71	RESISTOR	8.2K-5-1/4
R030	1	06-10621D72	RESISTOR	68.1-1-1/4
R034	1	06-10621C91	RESISTOR	10K-1-1/4
R035	1	06-10621C93	RESISTOR	10.5K-1-1/4
R036	1	06-10621E85	RESISTOR	1M-1-1/4
R037	1	18-83452F16	RESISTOR, VARIABLE	20K
R038	1	06-10621D54	RESISTOR	44.2K-1-1/4
R039	1	06-11009C49	RESISTOR	1K-5-1/4
T001	1	25-80342B54	TRANSFORMER	
U001	1	51-80356A14	INTEGRATED CIRCUIT	OP1120 SCREENED
U002	1	51-80356A14	INTEGRATED CIRCUIT	OP1120 SCREENED
U003	1	51-80345A02	INTEGRATED CIRCUIT	CA3160E SCREENED
VR001	1	48-80372B63	DIODE,	91V-5-1
VR002	1	48-80345A87	DIODE, ZENER	150V-5-.5
VR003	1	48-80368A98	DIODE, ZENER	6.2V-5-.4
VR004	1	48-83461E13	DIODE, ZENER	4.3V-5-.5
VR005	1	LCE90	DIODE, ZENER	90V-1W

HIGH-VOLTAGE POWER SUPPLY (A1A1)
(RTP-1007A)

Figure 6-3. Printed Wiring Board Assembly and Parts List

GH-VOLTAGE POWER SUPPLY (A1)

(RTP-1007A)

Figure 6-4. Assembly and Parts List

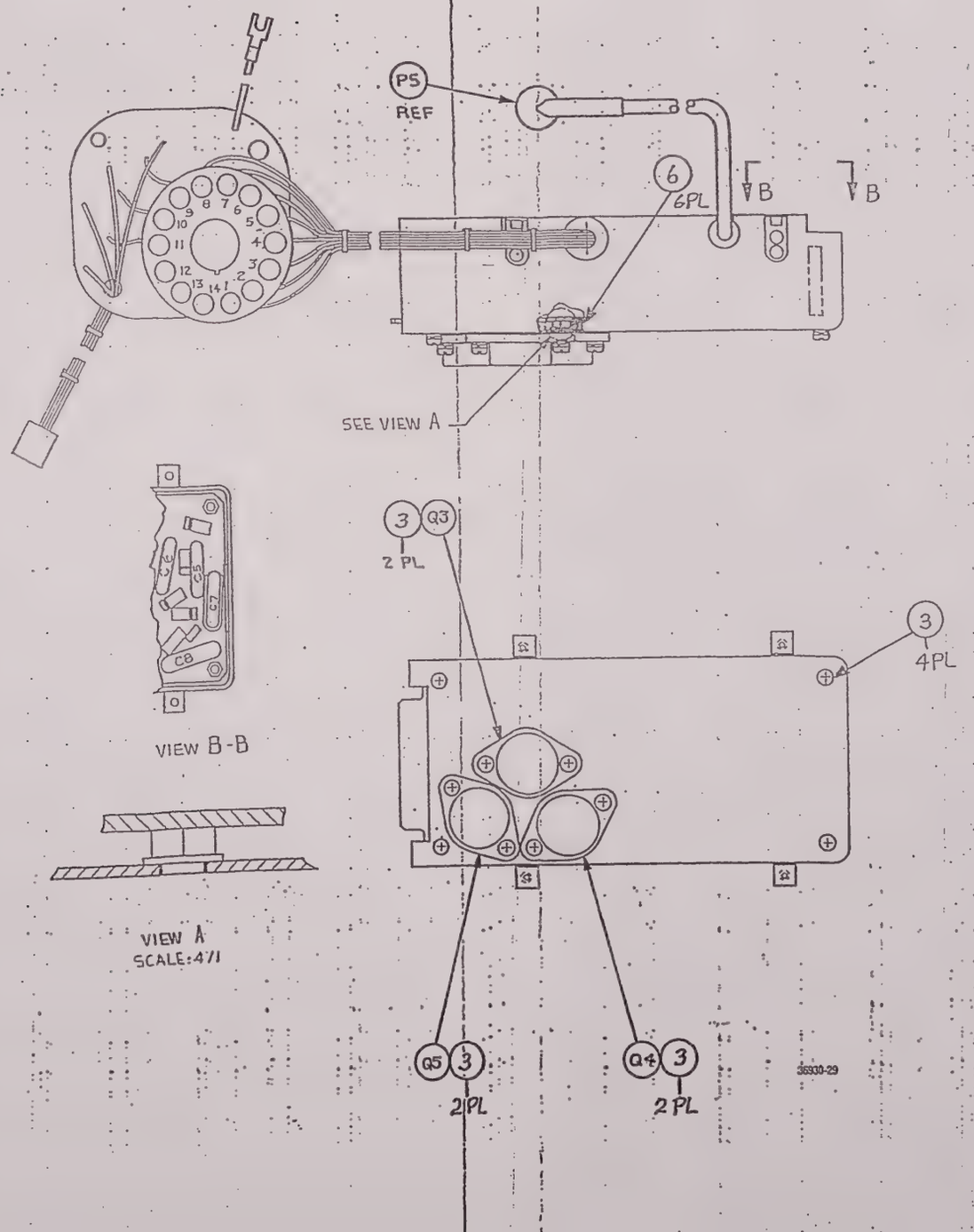

HIGH-VOLTAGE POWER SUPPLY (A1)
RTP-1007A

Find No.	Qty. Req.	Part No.	Nomenclature	Part Value
003	10	03-138148	SCREW, PH W/CAPT LOCK WASHER	4-40X.375
006	6	03-80375B11	WASHER, NYLON SHOULDER	
Q003	1	48-80396A25	TRANSISTOR	
Q004	1	48-80396A25	TRANSISTOR	
Q005	1	48-00869302	TRANSISTOR	

Figure 6-5. Assembly and Parts List

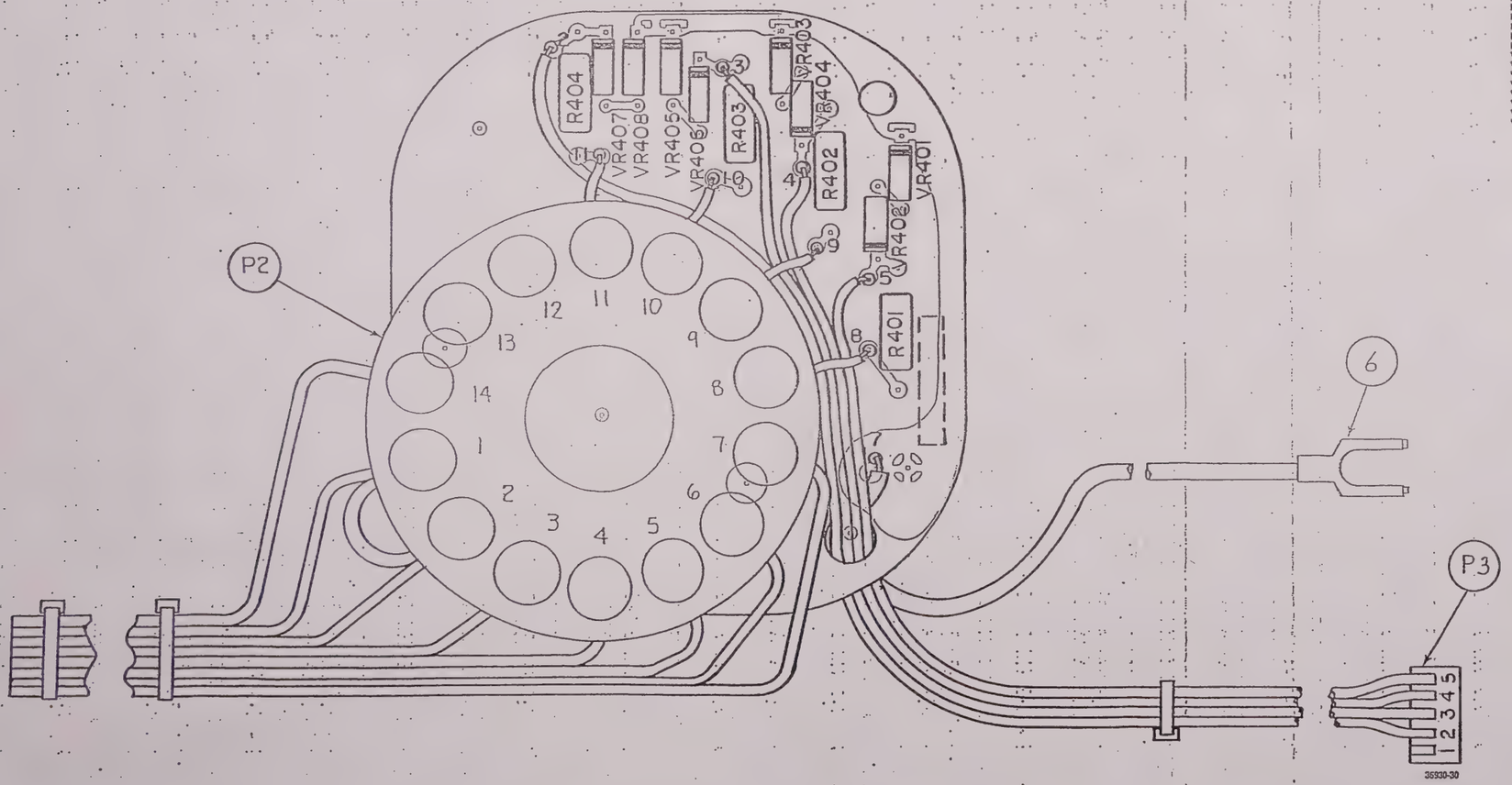

TRANSIENT PROTECTOR (A1 A2)

Find No.	Qty. Req.	Part No.	Nomenclature	Part Value
005	1	29-80375B14	TERMINAL,LUG	
P 002	1	09-80343B74	CONNECTOR,CNT	
P 003	1	09-80344B57	CONNECTOR, FEMALE	
R 401	1	06-11045A49	RESISTOR	1000-5-1/2
R 402	1	06-11045A49	RESISTOR	1000-5-1/2
R 403	1	06-11045A49	RESISTOR	1000-5-1/2
R 404	1	06-11045A49	RESISTOR	1000-5-1/2
VR401	1	48-80368A95	DIODE, ZENER	120V-5-.5
VR402	1	48-80368A95	DIODE, ZENER	120V-5-.5
VR403	1	48-80368A95	DIODE, ZENER	120V-5-.5
VR404	1	48-80368A95	DIODE, ZENER	120V-5-.5
VR405	1	48-80368A95	DIODE, ZENER	120V-5-.5
VR406	1	48-80368A95	DIODE, ZENER	120V-5-.5
VR407	1	48-80368A95	DIODE, ZENER	120V-5-.5
VR408	1	48-80368A95	DIODE, ZENER	120V-5-.5

SCOPE AMPLIFIER BOARD (A2)

(RTC-1005A)

Figure 7-1. Block Diagram

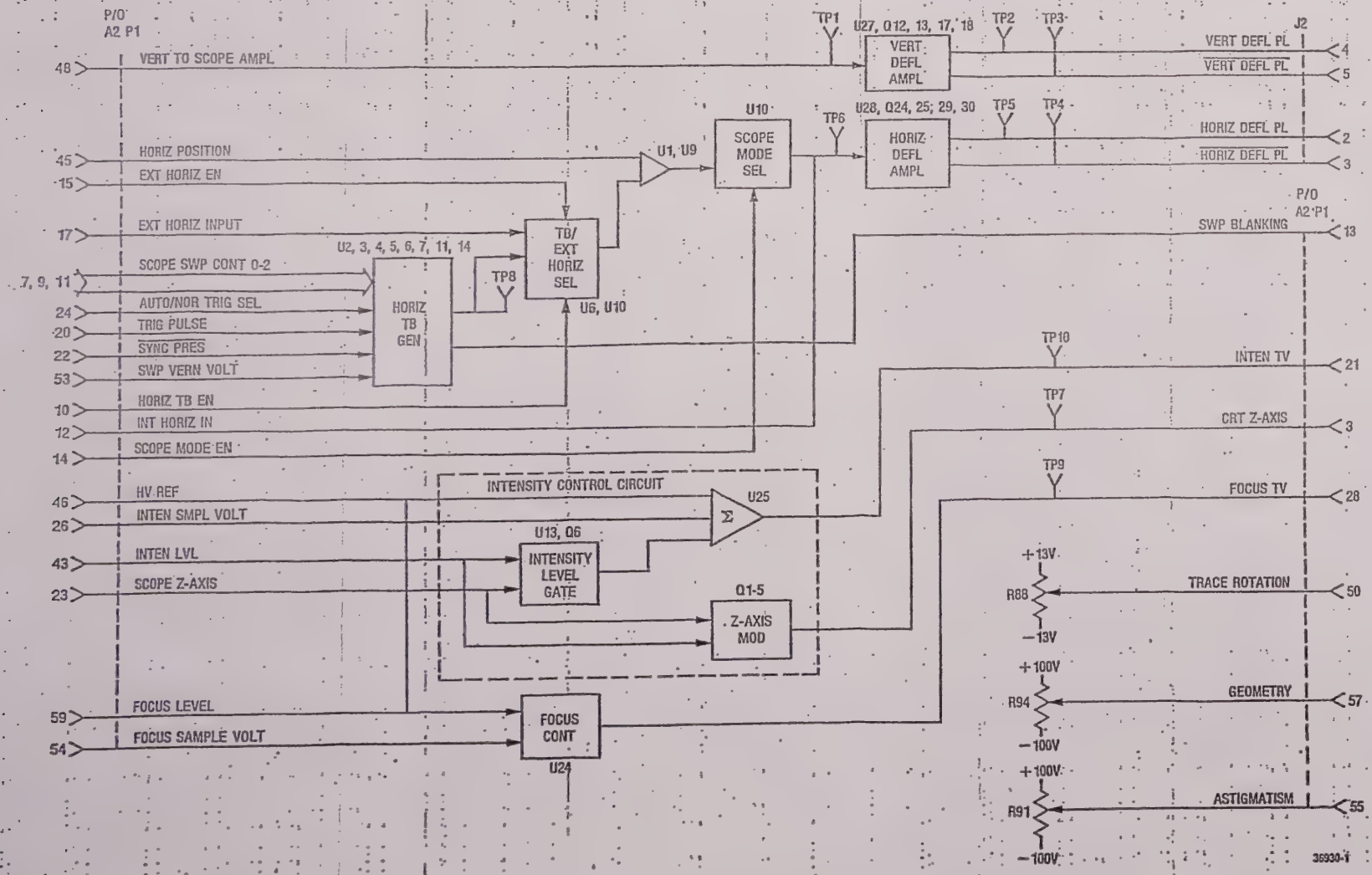

SECTION 7.
SCOPE AMPLIFIER BOARD (A2)

7.1 DESCRIPTION

The Scope Amplifier board contains the horizontal and vertical deflection amplifiers, the horizontal timebase generator, control circuitry for focus and intensity, and miscellaneous CRT bias adjustments.

The Scope Amplifier operates in an auto or normal mode. When a triggerable vertical signal is present, a sweep is developed in both auto and normal modes. When a triggerable signal is not present, the sweep is blanked in the normal mode and free-running in the auto mode. An external horizontal input is available at the front panel.

A block diagram of the Scope Amplifier board is shown in Figure 7-1, a schematic in Figure 7-2, and the printed wiring board assembly and parts list in Figure 7-3.

7.2 THEORY OF OPERATION

7.2.1 DEFLECTION AMPLIFIERS

The vertical and horizontal deflection amplifiers are identical. The input signal is initially amplified and split into two signals, 180 degrees out of phase. Each of these signals is then further amplified to become a CRT deflection-plate signal. The amplifiers provide 200V peak-to-peak signal capability with a frequency bandwidth of 1 MHz.

7.2.2 HORIZONTAL TIMEBASE GENERATOR

7.2.2.1 General

The horizontal timebase generator provides calibrated sweep rates over a six-decade range from 1 µsec to 100 msec per division. Sweep-rate selection originates from the processor via the signal lines for the SCOPE SWEEP CONTROL 0-3. Vernier control over the sweep rate is generated by the sweep-vernier voltage input from the front panel.

7.2.2.2 Ramp Generator

The ramp signal is developed using an integrator (U3) with a constant voltage. The sweep rate is determined by R5, R6, R7 and C3, C4, and C5. The combination of the RC network produces the six sweep rates.

7.2.2.3 Blanking and Trigger Hold-Off Circuitry

When the ramp voltage reaches +2.7V, the output of U11B produces a blanking pulse which is used to short-circuit the ramp integrator and trigger the hold-off integrator (U5). The hold-off rate is determined by R19, C14, and C15. The combination of the RC network produces two hold-off times, one for msec and one for µsec. When the hold-off ramp reaches +2.7V, the output of U11A short-circuits the hold-off integrator, and the sweep generator awaits a sweep trigger.

Sweep trigger is either in auto or normal mode as selected by the AUTO/NORMAL trigger-select via the front panel. In the normal mode, U11B is always disabled, thus keeping the blanking signal high and preventing the ramp from starting until a trigger pulse is present. In the auto mode, if the SYNC PRESENT input is high, indicating no sync, the scope sweep is self-triggered. If there is a sync, the sweep will wait for a pulse on the TRIG PULSE line to start the sweep.

NOTE

The entry of a scope trigger delay will prevent operation of scope triggering as long as the unit is set on "MODULATION, Tone Seq."

7.2.3 HORIZONTAL SWITCHING

The input to the horizontal deflection amplifier is selected between two sources. The first source is the INT HORIZ IN signal line, which provides the horizontal character sweep and the horizontal spectrum-analyzer sweep. The other source is the scope-mode signal path from the horizontal positioning-summing amplifier. The scope-mode signal is the output of either the horizontal timebase generator or the EXT HORIZ INPUT from the front panel. The SCOPE MODE EN line from the processor selects either internal horizontal or scope-mode horizontal inputs. The EXT HORIZ EN line selects one of the two scope-mode signals.

7.2.4 Z-AXIS MODULATOR

A crossover network provides CRT Z-AXIS modulation from dc to 1 MHz. A high-pass and low-pass network on the High-Voltage Power Supply board (A1) produces a crossover frequency of 16 Hz. The Z-AXIS modulator circuit is the high-frequency modulation path, 16 Hz to 1 MHz.

The resulting CRT Z-AXIS signal is capacitively coupled on the High-Voltage Power Supply board (A1) to the CRT grid. The low-frequency path, dc to 16 Hz, is through the intensity-control circuit.

7.2.5 INTENSITY CONTROL

The INTENSITY LEVEL signal from the front panel control is gated with the SCOPE Z-AXIS signal by the intensity-level gate (Q6). The gated signal is summed (U25) with the HIGH VOLTAGE REF and INTENSITY SAMPLE VOLTAGE signals, to provide the INTENSITY TRACKING VOLTAGE (TV) signal. The INTENSITY TV is the low-frequency control path which drives the intensity opto-isolator in the High-Voltage Supply.

7.2.6 FOCUS CONTROL

The FOCUS TRACKING VOLTAGE (TV) signal is obtained by comparing the FOCUS LEVEL control line to the FOCUS SAMPLE VOLT signal. The TV signal drives an opto-isolator circuit in the High-Voltage Supply which controls the CRT focus voltage.

7.2.7 ASTIGMATISM, GEOMETRY, AND TRACE ROTATION

The CRT alignment controls for astigmatism, geometry and trace rotation are obtained from the respective wipers of three potentiometers. Each potentiometer is connected between supply voltages equal to the required adjustment range.

SCOPE AMPLIFIER BOARD (A2)

(RTC-1005A)

Figure 7-2a. Schematic (Sheet 1 of 2)

NOTES:

1. PARTIAL REFERENCE DESIGNATIONS ARE SHOWN. FOR COMPLETE DESIGNATIONS PREFIX WITH A2.
2. FOR REFERENCE DRAWINGS REFER TO 01-P2220E.
3. UNLESS OTHERWISE SPECIFIED
   ALL RESISTORS ARE IN OHMS ± 5% PCT, 1/4 WATTS.
   ALL CAPACITORS ARE IN UF.
   ALL INDUCTORS ARE IN MH.
   ALL VOLTAGES ARE IN DC.
4. RESISTOR VALUE MAY BE SELECTED IN TEST. VALUE SHOWN IS NOMINAL.

WARNING: STATIC-SENSITIVE PARTS HANDLE APPROPRIATELY

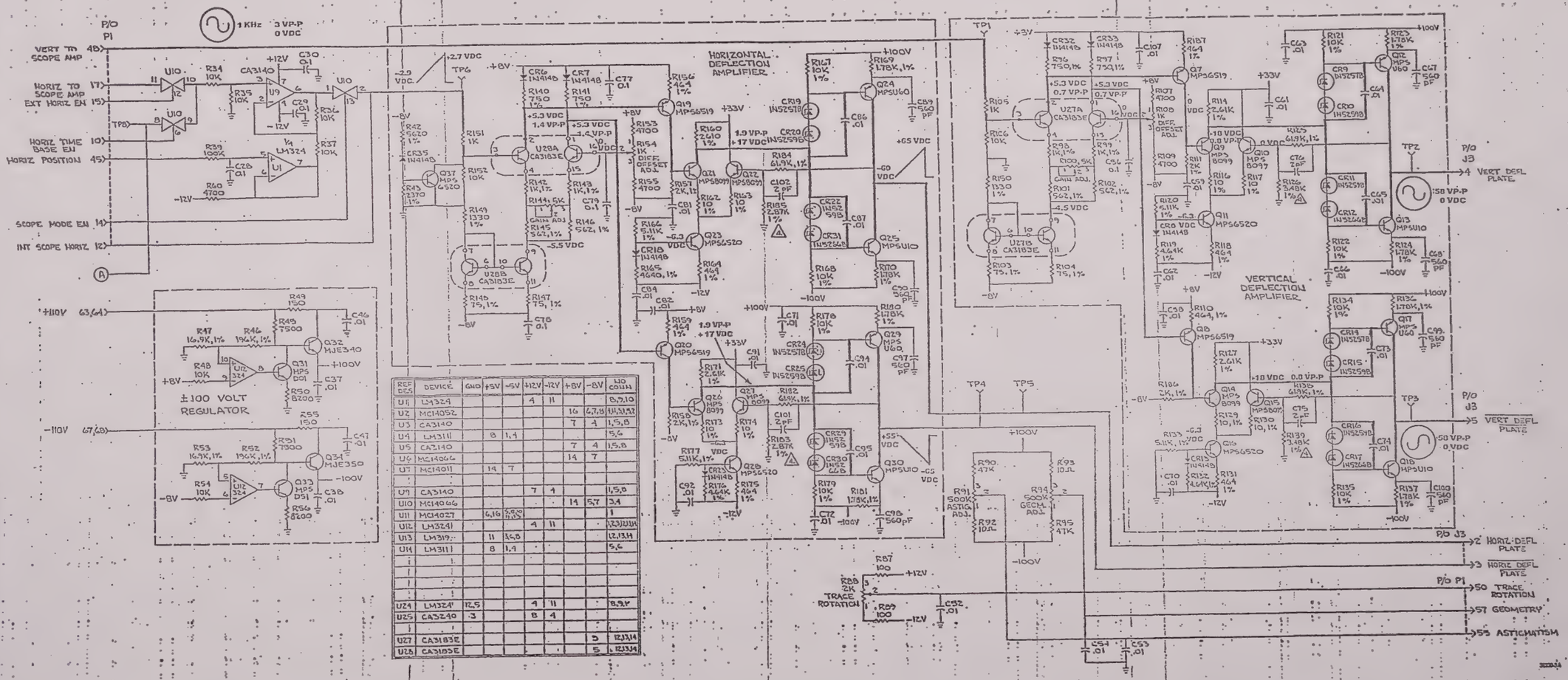

REF DES	DEVICE	GND	+5V	-5V	+12V	-12V	+8V	-8V	NO CONN
U1	LM324				4	11			8,9,10
U2	MC14052						16	6,7,8	4,11,31,32
U3	CA3140						7	4	1,5,8
U4	LM311		8	1,4					5,6
U5	CA3140						7	4	1,5,8
U6	MC14066						14	7	
U7	MC14011		14	7					
U9	CA3140				7	4			1,5,8
U10	MC14066						14	5,7	3,4
U11	MC14027		6,16	5,0,10 11,13					1
U12	LM324				4	11			1,2,3,12,13,14
U13	LM319		11	3,6,8					12,13,14
U14	LM311		8	1,4					5,6
U24	LM324	12,5			4	11			8,9,14
U25	CA3240	3			8	4			
U27	CA3183E							5	12,13,14
U28	CA3183E							5	12,13,14

LAST USED	NOT USED
C159	[illegible]
CR38	4,10,26,27,28
Q37	
R190	8,17,18,38,44,63-73
	73,32-25,112,113,
	128,372
U28	[illegible]
TP10	

SCOPE AMPLIFIER BOARD (A2)

(RTC-1005A)

Figure 7-2b. Schematic (Sheet 2 of 2)

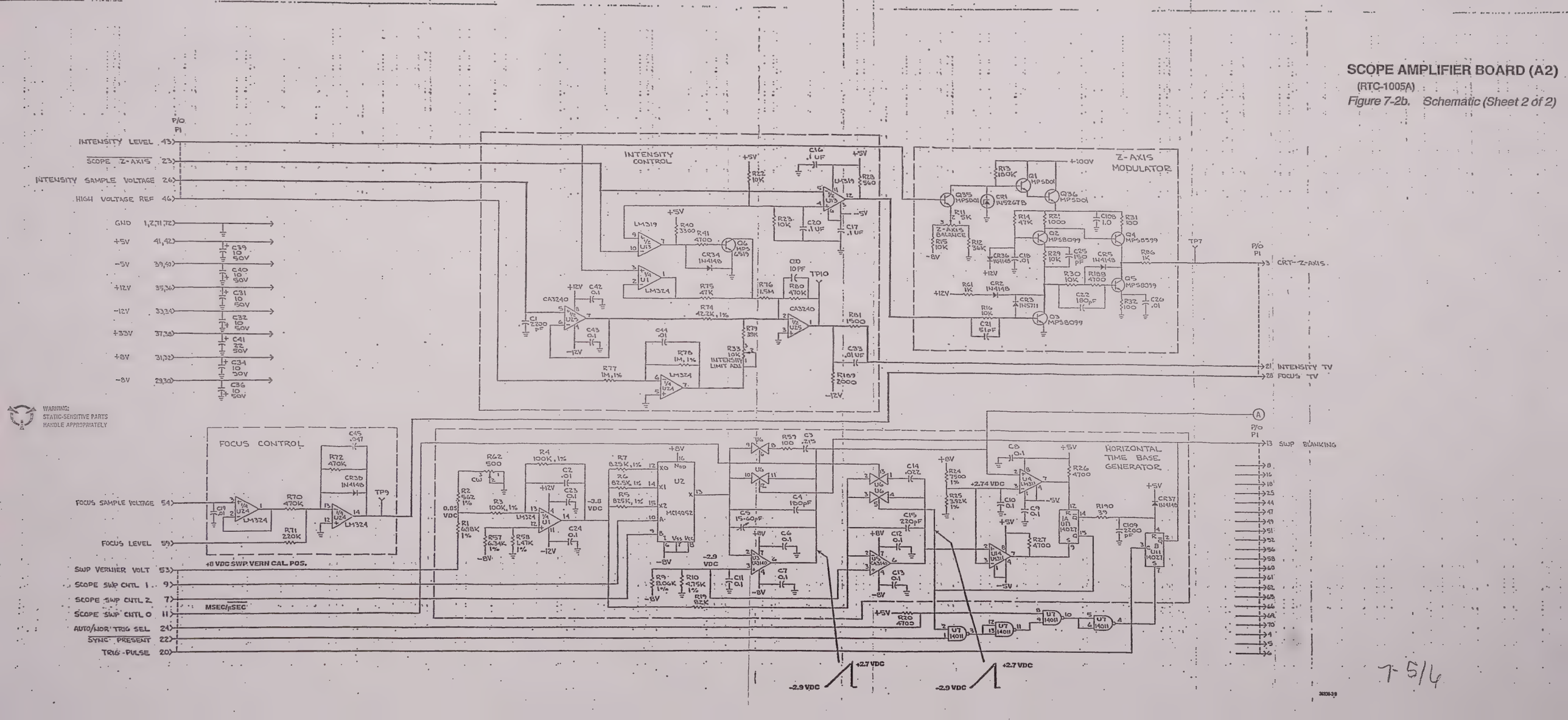

T-5/4

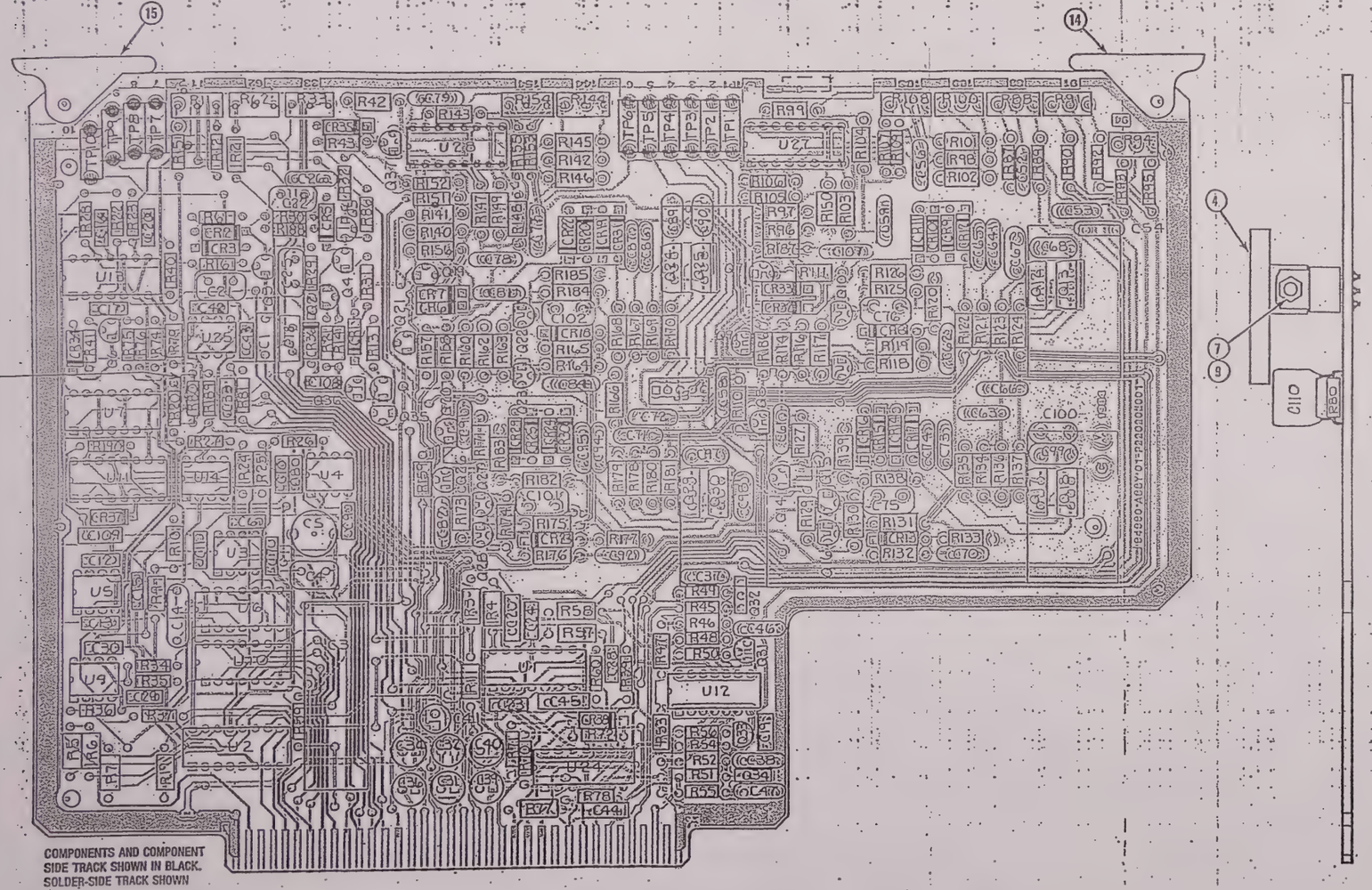

SCOPE AMPLIFIER BOARD (A2)
RTC-1005A

Find No.	Qty. Req.	Part No.	Nomenclature	Part Value
004	4	26-80344B68	HEATSINK	
007	4	03-138148	SCREW, PH W/CAPT LOCK WASHER	4-40X.375
009	4	02-140125	NUT, LIGHT HEX	.112-40
014	1	45-80339B28	CARD EJECTOR	
015	1	45-80339B35	CARD EJECTOR	MARKED
C001		21-80372B62	CAPACITOR	.0022UF-5-630
C002	1	21-80342B09	CAPACITOR	.01UF-20-50
C003	1	09-83445B58	CAPACITOR	.215UF-1
C004	1	21-80369A95	CAPACITOR	180PF-5-500
C005	1	20-82399D07	CAPACITOR, VARIABLE	15-60PF
C006	1	21-80342B10	CAPACITOR	.1UF-20-50
C007	1	21-80342B10	CAPACITOR	.1UF-20-50
C008	1	21-80342B10	CAPACITOR	.1UF-20-50
C009	1	21-80342B10	CAPACITOR	.1UF-20-50
C010	1	21-80342B10	CAPACITOR	.1UF-20-50
C011	1	21-80342B10	CAPACITOR	.1UF-20-50
C012	1	21-80342B10	CAPACITOR	.1UF-20-50
C013	1	21-80342B10	CAPACITOR	.1UF-20-50
C014	1	09-82095J08	CAPACITOR	.022UF-10-250
C015	1	21-80339B26	CAPACITOR	220PF-5-500
C016	1	21-80342B10	CAPACITOR	.1UF-20-50
C017	1	21-80342B10	CAPACITOR	.1UF-20-50
C018	1	21-80342B09	CAPACITOR	.01UF-20-50
C019	1	21-80342B09	CAPACITOR	.01UF-20-50
C020	1	21-80342B10	CAPACITOR	.1UF-20-50
C021	1	21-80339B16	CAPACITOR	51PF-5-500
C022	1	21-80369A95	CAPACITOR	180PF-5-500
C023	1	21-80342B10	CAPACITOR	.1UF-20-50
C024	1	21-80342B10	CAPACITOR	.1UF-20-50
C025	1	21-80369A94	CAPACITOR	150PF-5-500
C026	1	21-80396A52	CAPACITOR,CERAMIC DISC	.01UF-20+80-200
C028	1	21-80342B10	CAPACITOR	.1UF-20-50
C029	1	21-80342B10	CAPACITOR	.1UF-20-50
C030	1	21-80342B10	CAPACITOR	.1UF-20-50
C031	1	23-80341B15	CAPACITOR	10UF-20-50
C032	1	23-80341B15	CAPACITOR	10UF-20-50
C033	1	21-80342B09	CAPACITOR	.01UF-20-50
C034	1	23-80341B15	CAPACITOR	10UF-20-50
C035	1	23-80341B15	CAPACITOR	10UF-20-50
C037	1	21-80396A52	CAPACITOR,CERAMIC DISC	.01UF-20+80-200
C038	1	21-80396A52	CAPACITOR,CERAMIC DISC	.01UF-20+80-200
C039	1	23-80341B15	CAPACITOR	10UF-20-50
C040	1	23-80341B15	CAPACITOR	10UF-20-50
C041	1	23-80341B17	CAPACITOR	22UF-20-50
C042	1	21-80342B10	CAPACITOR	.1UF-20-50
C043	1	21-80342B10	CAPACITOR	.1UF-20-50
C044	1	21-80342B09	CAPACITOR	.01UF-20-50
C045	1	21-80342B13	CAPACITOR	.047UF-20-50
C046	1	21-80396A52	CAPACITOR,CERAMIC DISC	.01UF-20+80-200
C047	1	21-80396A52	CAPACITOR,CERAMIC DISC	.01UF-20+80-200
C052	1	21-80342B09	CAPACITOR	.01UF-20-50
C053	1	21-80396A52	CAPACITOR,CERAMIC DISC	.01UF-20+80-200
C054	1	21-80396A52	CAPACITOR,CERAMIC DISC	.01UF-20+80-200
C056	1	21-80342B10	CAPACITOR	.1UF-20-50
C058	1	21-80342B09	CAPACITOR	.01UF-20-50
C059	1	21-80342B09	CAPACITOR	.01UF-20-50
C061	1	21-80341B95	CAPACITOR	.01UF-20-100
C062	1	21-80342B09	CAPACITOR	.01UF-20-50
C063	1	21-80396A52	CAPACITOR,CERAMIC DISC	.01UF-20+80-200
C064	1	21-80396A52	CAPACITOR,CERAMIC DISC	.01UF-20+80-200
C065	1	21-80396A52	CAPACITOR,CERAMIC DISC	.01UF-20+80-200
C066	1	21-80396A52	CAPACITOR,CERAMIC DISC	.01UF-20+80-200
C067	1	21-80396A50	CAPACITOR, MODIFIED	560PF-10-500
C068	1	21-80396A50	CAPACITOR, MODIFIED	560PF-10-500
C070	1	21-80342B09	CAPACITOR	.01UF-20-50
C071	1	21-80396A52	CAPACITOR,CERAMIC DISC	.01UF-20+80-200
C072	1	21-80396A52	CAPACITOR,CERAMIC DISC	.01UF-20+80-200
C073	1	21-80396A52	CAPACITOR,CERAMIC DISC	.01UF-20+80-200
C074	1	21-80396A52	CAPACITOR,CERAMIC DISC	.01UF-20+80-200
C075	1	21-80339B10	CAPACITOR	2PF-.5PF-500
C076	1	21-80339B10	CAPACITOR	2PF-.5PF-500
C077	1	21-80342B10	CAPACITOR	.1UF-20-50
C078	1	21-80342B10	CAPACITOR	.1UF-20-50
C079	1	21-80342B10	CAPACITOR	.1UF-20-50
C081	1	21-80342B09	CAPACITOR	.01UF-20-50
C082	1	21-80342B09	CAPACITOR	.01UF-20-50
C084	1	21-80342B09	CAPACITOR	.01UF-20-50
C086	1	21-80396A52	CAPACITOR,CERAMIC DISC	.01UF-20+80-200
C087	1	21-80396A52	CAPACITOR,CERAMIC DISC	.01UF-20+80-200
C089	1	21-80396A50	CAPACITOR, MODIFIED	560PF-10-500
C090	1	21-80396A50	CAPACITOR, MODIFIED	560PF-10-500
C091	1	21-80341B95	CAPACITOR	.01UF-20-100

SCOPE AMPLIFIER BOARD (A2)

(RTC-1005A)

Figure 7-3. Printed Wiring Board Assembly and Parts List

SCOPE AMPLIFIER BOARD (A2) (Cont)
RTC-1005A

Find No.	Qty. Reg.	Part No.	Nomenclature	Part Value
C092	1	21-80342B09	CAPACITOR	.01UF-20-50
C094	1	21-80396A52	CAPACITOR,CERAMIC DISC	.01UF-20+80-200
C095	1	21-80396A52	CAPACITOR,CERAMIC DISC	.01UF-20+80-200
C097	1	21-80396A50	CAPACITOR, MODIFIED	560PF-10-500
C098	1	21-80396A50	CAPACITOR, MODIFIED	560PF-10-500
C099	1	21-80396A50	CAPACITOR, MODIFIED	560PF-10-500
C100	1	21-80396A50	CAPACITOR, MODIFIED	560PF-10-500
C101	1	21-80339B10	CAPACITOR	2PF-.5PF-500
C102	1	21-80339B10	CAPACITOR	2PF-.5PF-500
C107	1	21-80342B09	CAPACITOR	.01UF-20-50
C108	1	21-80342B91	CAPACITOR	1UF-20-100
C109	1	21-80341B99	CAPACITOR	2200PF-20-100
C110	1	21-00859934	CAPACITOR	10PF-.5PF-500
CR001	1	48-80345A85	DIODE, ZENER	75V-5-.5
CR002	1	48-84463K02	DIODE	
CR003	1	48-80372B64	DIODE	
CR005	1	48-84463K02	DIODE	
CR006	1	48-84463K02	DIODE	
CR007	1	48-84463K02	DIODE	
CR008	1	48-84463K02	DIODE	
CR009	1	48-80345A82	DIODE, ZENER	33V-5-.5
CR010	1	48-80345A83	DIODE, ZENER	39V-5-.5
CR011	1	48-80345A83	DIODE, ZENER	39V-5-.5
CR012	1	48-80345A84	DIODE, ZENER	68V-5-.5
CR013	1	48-84463K02	DIODE	
CR014	1	48-80345A82	DIODE, ZENER	33V-5-.5
CR015	1	48-80345A83	DIODE, ZENER	39V-5-.5
CR016	1	48-80345A83	DIODE, ZENER	39V-5-.5
CR017	1	48-80345A84	DIODE, ZENER	68V-5-.5
CR018	1	48-84463K02	DIODE	
CR019	1	48-80345A82	DIODE, ZENER	33V-5-.5
CR020	1	48-80345A83	DIODE, ZENER	39V-5-.5
CR022	1	48-80345A83	DIODE, ZENER	39V-5-.5
CR023	1	48-84463K02	DIODE	
CR024	1	48-80345A82	DIODE, ZENER	33V-5-.5
CR025	1	48-80345A83	DIODE, ZENER	39V-5-.5
CR029	1	48-80345A83	DIODE, ZENER	39V-5-.5
CR030	1	48-80345A84	DIODE, ZENER	68V-5-.5
CR031	1	48-80345A84	DIODE, ZENER	68V-5-.5
CR032	1	48-84463K02	DIODE	
CR033	1	48-84463K02	DIODE	
CR034	1	48-84463K02	DIODE	
CR035	1	48-84463K02	DIODE	
CR036	1	48-84463K02	DIODE	
CR037	1	48-84463K02	DIODE	
CR038	1	48-84463K02	DIODE	
J003	1	09-80372B69	CONNECTOR	
Q001	1	48-80340B87	TRANSISTOR	MPSD01
Q002	1	48-80345A51	TRANSISTOR	
Q003	1	48-80345A51	TRANSISTOR	
Q004	1	48-80345A52	TRANSISTOR	
Q005	1	48-80345A51	TRANSISTOR	
Q006	1	48-80340B85	TRANSISTOR	MPS6519
Q007	1	48-80340B85	TRANSISTOR	MPS6519
Q008	1	48-80340B85	TRANSISTOR	MPS6519
Q009	1	48-80345A51	TRANSISTOR	
Q010	1	48-80345A51	TRANSISTOR	
Q011	1	48-80340B86	TRANSISTOR	MPS6520
Q012	1	48-80341A48	TRANSISTOR	MPS-U60 SCREENED
Q013	1	48-80341A47	TRANSISTOR	MPS-U10 SCREENED
Q014	1	48-80345A51	TRANSISTOR	
Q015	1	48-80345A51	TRANSISTOR	
Q016	1	48-80340B86	TRANSISTOR	MPS6520
Q017	1	48-80341A48	TRANSISTOR	MPS-U60 SCREENED
Q018	1	48-80341A47	TRANSISTOR	MPS-U10 SCREENED
Q019	1	48-80340B85	TRANSISTOR	MPS6519
Q020	1	48-80340B85	TRANSISTOR	MPS6519
Q021	1	48-80345A51	TRANSISTOR	
Q022	1	48-80345A51	TRANSISTOR	
Q023	1	48-80340B86	TRANSISTOR	MPS6520
Q024	1	48-80341A48	TRANSISTOR	MPS-U60 SCREENED
Q025	1	48-80341A47	TRANSISTOR	MPS-U10 SCREENED
Q026	1	48-80345A51	TRANSISTOR	
Q027	1	48-80345A51	TRANSISTOR	
Q028	1	48-80340B86	TRANSISTOR	MPS6520
Q029	1	48-80341A48	TRANSISTOR	MPS-U60 SCREENED
Q030	1	48-80341A47	TRANSISTOR	MPS-U10 SCREENED
Q031	1	48-80340B87	TRANSISTOR	MPSD01
Q032	1	48-80345A14	TRANSISTOR	
Q033	1	48-80340B88	TRANSISTOR	MPSD51
Q034	1	48-80345A15	TRANSISTOR	
Q035	1	48-80340B87	TRANSISTOR	MPSD01
Q036	1	48-80340B87	TRANSISTOR	MPSD01
Q037	1	48-80340B85	TRANSISTOR	MPS6520
R001	1	05-10621G76	RESISTOR	6.98K-1-1/4
R002	1	05-10621B70	RESISTOR	562-1-1/4
R003	1	05-10621D88	RESISTOR	100K-1-1/4
R004	1	05-10621D83	RESISTOR	100K-1-1/4
R005	1	05-10621E77	RESISTOR	825K-1-1/4
R006	1	05-10621D80	RESISTOR	82.5K-1-1/4
R007	1	05-10621C83	RESISTOR	8.25K-1-1/4
R009	1	05-10621C82	RESISTOR	8.06K-1-1/4
R010	1	05-10621C60	RESISTOR	4.75K-1-1/4
R011	1	18-83452F11	RESISTOR,VARIABLE	5K
R012	1	05-11009C86	RESISTOR	36K-5-1/4
R013	1	05-11009D04	RESISTOR	180K-5-1/4
R014	1	05-11009C89	RESISTOR	47K-5-1/4
R015	1	05-11009C73	RESISTOR	10K-5-1/4
R016	1	05-11009C73	RESISTOR	10K-5-1/4
R019	1	05-11009C95	RESISTOR	82K-5-1/4
R020	1	05-11009C65	RESISTOR	4.7K-5-1/4
R021	1	05-11009C49	RESISTOR	1K-5-1/4
R022	1	05-11009C73	RESISTOR	10K-5-1/4
R023	1	05-11009C73	RESISTOR	10K-5-1/4
R024	1	05-10621C79	RESISTOR	7.5K-1-1/4
R025	1	05-10621C52	RESISTOR	3.92K-1-1/4
R026	1	05-11009C65	RESISTOR	4.7K-5-1/4
R027	1	05-11009C65	RESISTOR	4.7K-5-1/4
R028	1	05-11009C43	RESISTOR	560-5-1/4
R029	1	05-11009C73	RESISTOR	10K-5-1/4
R030	1	05-11009C73	RESISTOR	10K-5-1/4
R031	1	05-11009C25	RESISTOR	100-5-1/4
R032	1	05-11009C25	RESISTOR	100-5-1/4
R033	1	18-80342B96	RESISTOR NETWORK	10K SIP
R034	1	05-11009C73	RESISTOR	10K-5-1/4
R035	1	05-11009C73	RESISTOR	10K-5-1/4
R036	1	05-11009C73	RESISTOR	10K-5-1/4
R037	1	05-11009C73	RESISTOR	10K-5-1/4
R039	1	05-11009C97	RESISTOR	100K-5-1/4
R040	1	05-11009C61	RESISTOR	3.3K-5-1/4
R041	1	05-11009C65	RESISTOR	4.7K-5-1/4
R042	1	05-10621C67	RESISTOR	5.62K-1-1/4
R043	1	05-10621C31	RESISTOR	2.37K-1-1/4
R045	1	05-11009C70	RESISTOR	7.5K-5-1/4
R046	1	05-10621E17	RESISTOR	196K-1-1/4
R047	1	05-10621D14	RESISTOR	16.9K-1-1/4
R048	1	05-11009C73	RESISTOR	10K-5-1/4
R049	1	05-11009C29	RESISTOR	150-5-1/4
R050	1	05-11009C71	RESISTOR	8.2K-5-1/4
R051	1	05-11009C70	RESISTOR	7.5K-5-1/4
R052	1	05-10621E17	RESISTOR	196K-1-1/4
R053	1	05-10621D14	RESISTOR	16.9K-1-1/4
R054	1	05-11009C73	RESISTOR	10K-5-1/4
R055	1	05-11009C29	RESISTOR	150-5-1/4
R056	1	05-11009C71	RESISTOR	8.2K-5-1/4
R057	1	05-10621C72	RESISTOR	6.34K-1-1/4
R058	1	05-10621C11	RESISTOR	1.47K-1-1/4
R059	1	05-11009C25	RESISTOR	100-5-1/4
R060	1	05-11009C65	RESISTOR	4.7K-5-1/4
R061	1	05-11009C49	RESISTOR	1K-5-1/4
R062	1	18-83452F07	RESISTOR,VARIABLE	500
R070	1	05-11009D14	RESISTOR	470K-5-1/4
R071	1	05-11009D06	RESISTOR	220K-5-1/4
R072	1	05-11009D14	RESISTOR	470K-5-1/4
R074	1	05-10621D52	RESISTOR	42.2K-1-1/4
R075	1	05-11009C89	RESISTOR	47K-5-1/4
R076	1	05-00124B26	RESISTOR	1.5M-5-1/4
R077	1	05-10621E05	RESISTOR	1M-1-1/4
R078	1	05-10621E85	RESISTOR	1M-1-1/4
R079	1	05-00124A07	RESISTOR	39K-5-1/4
R080	1	05-11009D14	RESISTOR	470K-5-1/4
R081	1	05-11009C53	RESISTOR	1.5K-5-1/4
R086	1	05-11009C49	RESISTOR	1K-5-1/4
R087	1	05-11009C25	RESISTOR	100-5-1/4
R088	1	18-83452F01	RESISTOR,VARIABLE	2K
R089	1	05-11009C25	RESISTOR	100-5-1/4
R090	1	05-11009C89	RESISTOR	47K-5-1/4
R091	1	18-83452F23	RESISTOR,VARIABLE	500K
R092	1	05-10621A01	RESISTOR	10-1-1/4
R093	1	05-10621A01	RESISTOR	10-1-1/4
R094	1	18-83452F23	RESISTOR,VARIABLE	500K
R095	1	05-11009C89	RESISTOR	47K-5-1/4
R096	1	05-10621B82	RESISTOR	750-1-1/4
R097	1	05-10621B82	RESISTOR	750-1-1/4
R098	1	05-10621B94	RESISTOR	1K-1-1/4
R099	1	05-10621B94	RESISTOR	1K-1-1/4
R100	1	18-83452F11	RESISTOR,VARIABLE	5K
R101	1	05-10621B70	RESISTOR	562-1-1/4
R102	1	05-10621B70	RESISTOR	562-1-1/4
R103	1	05-10621A85	RESISTOR	75-1-1/4
R104	1	05-10621A85	RESISTOR	75-1-1/4
R105	1	05-11009C49	RESISTOR	1K-5-1/4
R106	1	05-11009C73	RESISTOR	10K-5-1/4
R107	1	05-11009C65	RESISTOR	4.7K-5-1/4
R108	1	18-83452F09	RESISTOR,VARIABLE	1K
R109	1	05-11009C65	RESISTOR	4.7K-5-1/4
R110	1	05-10621B52	RESISTOR	464-1-1/4
R111	1	05-10621C24	RESISTOR	2K-1-1/4
R114	1	05-10621C35	RESISTOR	2.61K-1-1/4
R115	1	05-10621A01	RESISTOR	10-1-1/4
R117	1	05-10621A01	RESISTOR	10-1-1/4
R118	1	05-10621B52	RESISTOR	464-1-1/4
R119	1	05-10621C59	RESISTOR	4.64K-1-1/4
R120	1	05-10621C53	RESISTOR	5.11K-1-1/4
R121	1	05-10621C31	RESISTOR	10K-1-1/4
R122	1	05-10621C91	RESISTOR	10K-1-1/4
R123	1	05-10621C19	RESISTOR	1.78K-1-1/4
R124	1	05-10621C19	RESISTOR	1.78K-1-1/4
R125	1	05-10621D58	RESISTOR	61.9K-1-1/4
R126	S01	05-10621C55	RESISTOR	4.22K-1-1/4
R126	S01	05-10621C31	RESISTOR	2.37K-1-1/4
R126	S01	05-10621C35	RESISTOR	2.61K-1-1/4
R126	S01	05-10621C39	RESISTOR	2.87K-1-1/4
R126	S01	05-10621C42	RESISTOR	3.09K-1-1/4
R126	S01	05-10621C43	RESISTOR	3.16K-1-1/4
R126	1	05-10621C47	RESISTOR	3.48K-1-1/4
R126	S01	05-10621C51	RESISTOR	3.83K-1-1/4
R126	S01	05-10621C58	RESISTOR	4.02K-1-1/4
R126	S01	05-10621C59	RESISTOR	4.64K-1-1/4
R126	S01	05-10621C63	RESISTOR	5.11K-1-1/4
R127	1	05-10621C35	RESISTOR	2.61K-1-1/4
R129	1	05-10621A01	RESISTOR	10-1-1/4
R130	1	05-10621A01	RESISTOR	10-1-1/4
R131	1	05-10621B52	RESISTOR	464-1-1/4
R132	1	05-10621C59	RESISTOR	4.64K-1-1/4
R133	1	05-10621C53	RESISTOR	5.11K-1-1/4
R134	1	05-10621C91	RESISTOR	10K-1-1/4
R135	1	05-10621C91	RESISTOR	10K1-1-1/4
R136	1	05-10621C19	RESISTOR	1.78K-1-1/4
R137	1	05-10621C19	RESISTOR	1.78K-1-1/4
R138	1	05-10621D58	RESISTOR	61.9K-1-1/4
R139	S01	05-10621C55	RESISTOR	4.22K-1-1/4
R139	S01	05-10621C31	RESISTOR	2.37K-1-1/4
R139	S01	05-10621C35	RESISTOR	2.61K-1-1/4
R139	S01	05-10621C39	RESISTOR	2.87K-1-1/4
R139	S01	05-10621C42	RESISTOR	3.09K-1-1/4
R139	S01	05-10621C43	RESISTOR	3.16K-1-1/4
R139	1	05-10621C47	RESISTOR	3.48K-1-1/4
R139	S01	05-10621C51	RESISTOR	3.83K-1-1/4
R139	S01	05-10621C58	RESISTOR	4.02K-1-1/4
R139	S01	05-10621C59	RESISTOR	4.64K-1-1/4
R139	S01	05-10621C63	RESISTOR	5.11K-1-1/4
R140	1	05-10621B82	RESISTOR	750-1-1/4
R141	1	05-10621B82	RESISTOR	750-1-1/4
R142	1	05-10621B94	RESISTOR	1K-1-1/4
R143	1	05-10621B94	RESISTOR	1K-1-1/4
R144	1	18-83452F11	RESISTOR,VARIABLE	5K
R145	1	05-10621B70	RESISTOR	562-1-1/4
R146	1	05-10621B70	RESISTOR	562-1-1/4
R147	1	05-10621A85	RESISTOR	75-1-1/4
R148	1	05-10621A85	RESISTOR	75-1-1/4
R149	1	05-10621C07	RESISTOR	1330-1-1/4
R150	1	05-10621C07	RESISTOR	1330-1-1/4
R151	1	05-11009C49	RESISTOR	1K-5-1/4
R152	1	05-11009C73	RESISTOR	10K-5-1/4
R153	1	05-11009C65	RESISTOR	4.7K-5-1/4
R154	1	18-83452F09	RESISTOR,VARIABLE	1K
R155	1	05-11009C65	RESISTOR	4.7K-5-1/4
R156	1	05-10621B82	RESISTOR	464-1-1/4
R157	1	05-10621C24	RESISTOR	2K-1-1/4
R158	1	05-10621C24	RESISTOR	2K-1-1/4
R159	1	05-10621B82	RESISTOR	464-1-1/4
R160	1	05-10621C35	RESISTOR	2.61K-1-1/4
R162	1	05-10621A01	RESISTOR	10-1-1/4
R163	1	05-10621A01	RESISTOR	10-1-1/4
R164	1	05-10621B62	RESISTOR	464-1-1/4
R165	1	05-10621C59	RESISTOR	4.64K-1-1/4
R166	1	05-10621C53	RESISTOR	5.11K-1-1/4
R167	1	05-10621C91	RESISTOR	10K-1-1/4
R168	1	05-10621C91	RESISTOR	10K-1-1/4
R169	1	05-10621C19	RESISTOR	1.78K-1-1/4
R170	1	05-10621C19	RESISTOR	1.78K-1-1/4
R171	1	05-10621C35	RESISTOR	2.61K-1-1/4
R173	1	05-10621A01	RESISTOR	10-1-1/4
R174	1	05-10621A01	RESISTOR	10-1-1/4
R175	1	05-10621B62	RESISTOR	464-1-1/4
R176	1	05-10621C59	RESISTOR	4.64K-1-1/4
R177	1	05-10621C53	RESISTOR	5.11K-1-1/4
R178	1	05-10621C91	RESISTOR	10K-1-1/4
R179	1	05-10621C91	RESISTOR	10K-1-1/4
R180	1	05-10621C19	RESISTOR	1.78K-1-1/4
R181	1	05-10621C19	RESISTOR	1.78K-1-1/4
R182	1	05-10621D68	RESISTOR	51.9K-1-1/4
R183	1	5043ED2K870F	RESISTOR	2.87K-1-1/4 NOMINAL
R183	1	5043ED2K370F	RESISTOR	2.37K-1-1/4
R183	S01	5043ED2K610F	RESISTOR	2.61K-1-1/4
R183	S01	5043ED3K090F	RESISTOR	3.09K-1-1/4
R183	S01	5043ED3K160F	RESISTOR	3.16K-1-1/4
R183	S01	5043ED3K480F	RESISTOR	3.48K-1-1/4
R184	1	05-10621D68	RESISTOR	61.9K-1-1/4
R185	1	5043ED2K870F	RESISTOR	2.87K-1-1/4 NOMINAL
R185	S01	5043ED2K370F	RESISTOR	2.37K-1-1/4
R185	S01	5043ED2K610F	RESISTOR	2.61K-1-1/4
R185	S01	5043ED3K090F	RESISTOR	3.09K-1-1/4
R185	S01	5043ED3K160F	RESISTOR	3.16K-1-1/4
R185	S01	5043ED3K480F	RESISTOR	3.48K-1-1/4
R186	1	05-10621C24	RESISTOR	2K-1-1/4
R187	1	05-10621B62	RESISTOR	464-1-1/4
R188	1	05-11009C65	RESISTOR	4.7K-5-1/4
R189	1	05-11009C56	RESISTOR	2K-5-1/4
R190	1	05-11009C15	RESISTOR	39-5-1/4
TP001	1	09-80331A88	JACK	WHITE
TP002	1	09-80331A88	JACK	WHITE
TP003	1	09-80331A88	JACK	WHITE
TP004	1	09-80331A88	JACK	WHITE
TP005	1	09-80331A88	JACK	WHITE
TP006	1	09-80331A88	JACK	WHITE
TP007	1	09-80331A88	JACK	WHITE
TP008	1	09-80331A88	JACK	WHITE
TP009	1	09-80331A88	JACK	WHITE
TP010	1	09-80331A88	JACK	WHITE
U001	1	51-80396A16	INTEGRATED CIRCUIT	LM324N SCREENED
U002	1	51-82884L59	INTEGRATED CIRCUIT	
U003	1	51-80345A01	INTEGRATED CIRCUIT	CA3140E SCREENED
U004	1	51-80347A38	INTEGRATED CIRCUIT	
U005	1	51-80345A01	INTEGRATED CIRCUIT	CA3140E SCREENED
U006	1	51-82884L71	INTEGRATED CIRCUIT	
U007	1	51-05596E46	INTEGRATED CIRCUIT	
U009	1	51-80345A01	INTEGRATED CIRCUIT	CA3140E SCREENED
U010	1	51-82884L71	INTEGRATED CIRCUIT	
U011	1	51-82884L10	INTEGRATED CIRCUIT	
U012	1	51-80396A16	INTEGRATED CIRCUIT	LM324N SCREENED
U013	1	51-80345A05	INTEGRATED CIRCUIT	LM319N SCREENED
U014	1	51-80347A38	INTEGRATED CIRCUIT	
U024	1	51-80396A16	INTEGRATED CIRCUIT	LM324N SCREENED
U025	1	51-80345A04	INTEGRATED CIRCUIT	CA3240E SCREENED
U027	1	51-80343B25	INTEGRATED CIRCUIT	CA3183E SCREENED
U028	1	51-80343B25	INTEGRATED CIRCUIT	CA3183E SCREENED

SECTION 8.
LOW-VOLTAGE POWER SUPPLY (A3-A6)

8.1 DESCRIPTION

The Low-Voltage Power Supply consists of four boards: 1) Battery Charger board (A3), 2) Control board (A4), 3) Output board (A5), and 4) Switcher board (A6). This power supply converts an ac or a dc voltage input to the dc voltages required to power the System Analyzer. In ac mode, the power supply operates as an off-line, half-bridge converter for inputs of 100 to 130 Vac or 200 to 260 Vac at 50 to 400 Hz. In dc mode, the power supply operates as a push-pull converter for inputs of 11 to 19 Vdc.

When connected to an ac power source, the unit automatically switches to the ac operating mode. The Battery Charger is included in this power supply for charging the optional external battery pack. A standby mode allows the operator to shut off power to all modules in the System Analyzer except the OCXO/TCXO and the Battery Charger.

The Low-Voltage Power Supply contains protection circuitry that will shut down or lock out the power supply for the following conditions: 1) a power-supply short circuit, 2) high and low input voltages, and 3) high internal temperatures.

A block diagram of the Low-Voltage Power Supply is shown at the end of this section in Figure 8-1.

8.2 THEORY OF OPERATION

8.2.1 BATTERY CHARGER BOARD (A3)

8.2.1.1 General

The Battery Charger board contains the rectifier circuitry for the ac off-line switching power supply and part of the input filtering. A line transformer supplies the external battery pack with charging voltage, supplies bias voltage to the control circuitry for the power supply, and powers the 10-MHz Frequency-Standard Interface board (A16). A separate −5V regulator for the RF Synthesizer module (A9) is also included, along with a 6.2V zener diode (VR3) that provides an outer voltage clamp on the +5V output line of the Low-Voltage Power Supply.

A schematic of the Battery Charger board is shown at the end of this section in Figure 8-2, the printed wiring board and parts list in Figure 8-3, and the assembly and parts list in Figure 8-4.

8.2.1.2 Rectifier/Doubler

The bridge rectifier (BR1) and the filter capacitors (C1, C2, C5, and C6) rectify and filter the raw ac input to a dc output on the Vc+ and Vc− lines. Some of the filter capacitors are on the A3 board; the rest (C3, C4, C12, and C13) are on the Switcher board (A6). A nominal 230-Vac input uses the AC INPUT and 220 RETURN lines, which are connected to the inputs of the bridge rectifier. The bridge rectifier provides full-wave rectification of the ac input, and the filter capacitors filter the signal to a nominal level of 325 Vdc. For a nominal 115-Vac input, half of the bridge rectifier is used (the AC INPUT line) in conjunction with the filter capacitors (the 110 RETURN line) to provide a full-wave voltage doubler. The voltage doubler then produces a nominal 325-Vdc output. Thermistors RT1 and RT2 limit the initial in-rush current to the filter capacitors.

8.2.1.3 Line Transformer

The line transformer (T1) has two primary windings and a single, center-tapped secondary. The two primary windings are switched on the System Motherboard (A19) by the 110/220 switch — in series for 220V operation and in parallel for 110V operation. This provides the same voltage on the secondary winding for operation at inputs of both 110 and 220 Vac. The secondary winding provides two outputs. One output, AC VOLTAGE SENSE/BATTERY CHARGER, is full-wave rectified by bridge rectifier BR2 and filtered by capacitor C4 to a level of 27 to 35 Vdc. The other output, FREQUENCY STANDARD SUPPLY, is half-wave rectified by CR8 and filtered by capacitor C3 to a level of 15 to 16 Vdc.

8.2.1.4 Battery Charger

The Battery Charger circuitry is selected by the POWER ON line coming from the front panel. A no-connect on the POWER ON line will turn transistor Q2 on, which enables transistor Q1. Transistor Q1 is biased for constant current operation (1.2A) by resistor R7 and diodes CR5, CR6, and CR7.

8.2.2 CONTROL BOARD (A4)

8.2.2.1 General

The Control board controls, protects, and regulates the System Analyzer's Low-Voltage Power Supply. On

the Control board are the error amplifier, the pulse-width modulator, and the Switcher drive-circuitry portion of the converter's regulation control loop. There is also a pulse-width modulator which drives the switching transistor for the High-Voltage Power Supply. The Control board protects the converter with lockouts under four conditions: output overvoltage, input ac and dc under/overvoltage, output overload or short-circuit, and high internal temperatures.

A block diagram of the Control board is shown at the end of this section in Figure 8-5, a schematic in Figure 8-6, and the printed wiring board assembly and parts list in Figure 8-7.

8.2.2.2 AC/DC Switch-Over

The ac/dc switch-over section provides 1) the voltage for the Control board, and 2) the switch-over circuitry to change between ac and dc operation. For dc operation, the dc input is connected to DC BUS input via the input filter (C1, C2 and L1) on the Switcher board. During switch-over, transistor Q2 is off, which means there is no AC VOLTAGE SENSE, which enables transistors Q1 and Q3. Q3 then energizes relay K1 on the Switcher board. This switches the dc primary to the chopping transformer and disconnects the ac primary. Q1 then switches the DC BUS through CR16 to the FREQUENCY STD SUPPLY line and the voltage regulator (U9 and U10). U9 and U10 supply power to V_S and V_L on the Control board. For ac operation, the FREQUENCY STD SUPPLY line supplies power to the two regulators, U9 and U10. AC operation overrides dc operation through the AC VOLTAGE SENSE line, which turns Q2 on and Q3 off. This pulls the $\overline{\text{RELAY ON}}$ line high, up to the DC BUS, causing relay K1 to switch the ac primary to the chopping transformer.

8.2.2.3 Loop Filter

The loop filter consists of a combination error amplifier/filter which controls the bandwidth and stability of the control loop. The error amplifier compares the +5V output with the reference voltage set by potentiometer R6. R6 is adjusted to provide a +5.2V output. The loop filter provides a 1-kHz, 3-dB bandwidth.

8.2.2.4 Drivers and Control

The low-voltage driver and control section contains the pulse-width modulator, dead-time select, and ac/dc drivers. The error voltage from the loop filter is connected to the pulse-width modulator U2 for duty-cycle control of switchers. Pulse-width modulator U2 provides two 40-kHz complementary outputs. R10 and C7 control the frequency. Dead time between the two complementary drive signals ensures that the two transistor switches (Q1 and Q2, or Q3 and Q4 on the A6 board) never turn on at the same time. The dead time is selected by Q6 via the DC BUS line for 0.5 µsec in the dc mode (R63 and C7) and 2 µsec in the ac mode (R9 and C7). The complementary outputs are switched by U3 to either the ac drivers (U11) or the dc drivers (U12). The driver-select circuitry (Q15 and U5) is controlled by the AC VOLTAGE SENSE line. U2 uses the timing capacitor (C8) to soft-start the power supply.

8.2.2.5 Lockout for Output Overvoltage

Output-overvoltage lockout protects modules and boards in the System Analyzer from high voltages on outputs of the Low-Voltage Power Supply. The +12V and −12V outputs are monitored by comparator U7. When it detects an overvoltage, this comparator will shut down the power supply via the input to the pulse-width modulator. The +5V output is protected against overvoltage by zener diode VR3 on the A3 board. The +33V and −5V outputs are protected by VR1 and VR2 on the A5 board.

8.2.2.6 Current-Limit Lockout

The current-limit lockout is used to monitor the power the System Analyzer draws from the power supply. This monitoring measures the instantaneous current in the switching transistors. In dc mode, the switching current is measured by R20 (8mV/A) on the Switcher board and then compared by U6B to a dc reference, thus providing a current limit of 25A. In ac mode, the switching current is monitored by T1 (100/1 turns ratio) on the Output board. The signals AC CURRENT SENSE and $\overline{\text{AC CURRENT SENSE}}$ are full-wave rectified by CR5-CR8, which are loaded with 100 ohms by R29. The resulting voltage is 1 V/A of the dc switching current. U6A compares this voltage to a dc reference, providing a current limit of 1.5A. When the current limit is exceeded, U6A sets the current-limit latch (U84), shutting down the power supply via the shut-down pin on U2. The current latch is reset by toggling the POWER switch on the front panel.

8.2.2.7 Lockout for Input Over/Undervoltage

For voltages outside the specified input range of 100 to 130 Vac, 200 to 260 Vac, or 11 to 19 Vdc, the circuitry for over/undervoltage lockout shuts down the power supply via the soft-start pin on U2. Lockout of ac and dc input undervoltage uses the same circuitry. The ac input voltage is monitored via the FREQUENCY STD SUPPLY line, and the dc input voltage is monitored via the DC BUS line. When the output of U9 drops below 8.2V, the zener diode VR4 will drop out, turning Q4 off. This will allow CR19 to turn Q5 on, causing the power supply to shut down via the soft-start pin on U2. When the DC IN line goes above 19V, VR3 will zener, turning Q5 on. For ac overvoltage, the AC VOLTAGE SENSE signal is divided by R30 and R1 and then

compared by U6D to a dc reference. When an overvoltage occurs, the output of U6D will shut down the supply via the soft-start.

8.2.2.8 Lockout for High Internal Temperature

When the internal temperature of the power supply rises above 85°C, switch S1 will close, shutting down the power supply via the soft-start on U2.

8.2.2.9 High-Voltage Driver

The oscillator output of the pulse-width modulator (U2) is fed to a divide-by-two frequency divider (U8B). This output is used to synchronize the constant duty cycle pulse-width modulator (U4) that drives the switching transistors for the High-Voltage Power Supply. This modulator operates at a constant duty cycle of 20 kHz, with a dead time of 2 µsec. R47 and C13 control the operating frequency, while R27 and C13 control the dead time. Modulator U4 provides ±5V complementary output, allowing more efficient drive of the switching transistors; this is because the bases are switched negative to sweep out the charge for turn-off.

8.2.2.10 Control Logic Functions

Table 8-1 shows the control logic functions for the A4 board.

8.2.3 OUTPUT BOARD (A5)

8.2.3.1 General

The Output board contains the chopping transformer, rectifiers and filters for the Low-Voltage Power Supply. The chopping transformer (T1) has two primary windings (one for ac and one for dc operation) and a multiple-output secondary which provides ±5V, ±12V, ±110V, and +33V. Also included on this board is a current-sensing transformer (T2) for sensing primary current on the ac off-line side of the chopping transformer.

A schematic of the Output board is shown at the end of this section in Figure 8-8, and the printed wiring board assembly and parts list in Figure 8-9.

8.2.3.2 AC Operation

During ac operation, the half-bridge switching transistors (Q1 and Q2) on the Switcher board (A6) drive the chopping transformer via the XFMR AC DR and $\overline{\text{XFMR AC DR}}$ primary winding. The transistors drive current into and then out of the primary winding. To ensure that both Q1 and Q2 are off, dead time between these two transistors is important. Without dead time, there will be a short-circuit across the primary winding. The rectified-average ac voltage at the primary winding is a nominal 87V. During ac operation, the primary current is monitored by the current-sensing transformer (T2). The ratio for the current-sensing transformation is 100 to 1, and the secondary is loaded with 100 ohms on the Control board (A4). This produces a secondary output of 1V/A of primary current in the chopping transformer. If the primary current in the chopping transformer rises above 1.5A (due to an excessive load or a short on the secondaries), the power supply will shut down.

8.2.3.3 DC Operation

During dc operation, the push-pull switching transistor (Q3 and Q4) on Switcher board A6 drives the chopping transformer via DC CENTER TAP, XFMR DC DR, and $\overline{\text{XFMR DC DR}}$. This primary winding is center-tapped. A dc voltage is applied to the center tap, and XFMR DC DR and $\overline{\text{XFMR DC DR}}$ are alternately pulled low by switching transistors. The nominal dc voltage at the DC CENTER TAP is 11.7 Vdc for an input of 12.0 Vdc. The primary current in dc operation is monitored on Switcher board A6.

Table 8-1. Control Logic Functions

INPUTS			OUTPUTS						
$\overline{\text{PWR ON}}$	$\overline{\text{PWR OFF}}$	AC VOLTAGE SENSE	DEAD TIME	PULSE WIDTH MODULATOR	AC DRIVER	DC DRIVER	AC LED DRIVER	DC LED DRIVER	$\overline{\text{RELAY ON}}$
HIGH	HIGH	HIGH	2 µSEC	OFF	OFF	OFF	ON	OFF	HIGH
HIGH	HIGH	LOW	0.5 µSEC	OFF	OFF	OFF	OFF	ON	LOW
HIGH	LOW	HIGH	2 µSEC	OFF	OFF	OFF	ON	OFF	HIGH
HIGH	LOW	LOW	0.5 µSEC	OFF	OFF	OFF	OFF	OFF	HIGH
LOW	HIGH	HIGH	2 µSEC	ON	ON	OFF	ON	OFF	HIGH
LOW	HIGH	LOW	0.5 µSEC	ON	OFF	ON	OFF	ON	LOW
LOW	LOW	HIGH	INVALID STATE						
LOW	LOW	LOW	INVALID STATE						

36930-124

8.2.3.4 Outputs

The secondary-winding outputs of the chopping transformer are all full-wave center-tapped rectified. Each of these outputs is filtered by an LC low-pass filter. The output voltages are listed in Table 8-2. These voltages are specified when the +5V output is adjusted for 5.2V ± 1 percent. This adjustment is located at R6 on Control board A4. The +33V and −5V outputs are protected against overvoltage by this board's zener diodes, VR1 and VR2. The +5V output is protected against overvoltage by a zener diode (VR3) on the Battery Charger board (A3). The +12V and −12V outputs are protected against overvoltage by a comparator (U7) on the Control board, which shuts down the power supply when it detects an overvoltage.

Table 8-2. Output Voltages

Output	Voltage (Volts)
+5V	+5.2 ± 1%
−5V	−5.2 ± 5%
+12V	+12.4 ± 5%
−12V	−12.4 ± 5%
+33V	+31 ± 5%
+110V	+110 ± 5%
−110V	−110 ± 5%

8.2.4 SWITCHER BOARD (A6)

8.2.4.1 General

The Switcher board contains the main switching transistors for the ac off-line and low-voltage dc-switching converters. The A6 board also contains the dc-input filter, which provides filtered dc to the DC BUS, the DC CENTER TAP, and the ac/dc relay.

A schematic of the Switcher board is shown at the end of this section in Figure 8-10, the printed wiring board assembly and parts list in Figure 8-11, and the assembly and parts list in Figure 8-12.

8.2.4.2 AC/DC Relay

Relay K1 switches either the DC CENTER TAP signal to the dc primary of the chopping transformer for dc operation, or the XFMR DC DR signal to the primary for ac operation. For dc operation, the dc input is applied to voltage regulator U1, which will energize relay K1 when the Control board's RELAY ON input line goes low. For ac operation, the RELAY ON line is either floating or pulled high, which disables regulator U1 and relay K1. AC operation will always override dc operation.

8.2.4.3 DC Switches

Field-effect transistors Q3 and Q4 are the dc-operation switches, connected in a push-pull configuration. These transistors are driven by complementary, pulse-width-modulated signals (DC DRIVE and DC DRIVE) coming from the Control board. The frequency of the signals is 40 kHz, with a dead time between the signals of greater than 0.5 µsec. The current being switched in the primary of the chopping transformer is monitored by resistor R20.

8.2.4.4 AC Switches

Field-effect transistors Q1 and Q2 are the ac-operation switches, connected in a half-bridge configuration. AC DRIVE and AC DRIVE, the complementary, pulse-width-modulated signals coming from the Control board, drive the ac switches via transformer T1. The frequency of the drive signal is 40 kHz, with a dead time of greater than 2 µsec. The rectified and filtered ac input, $V_{ac}+$ and $V_{ac}-$, is further filtered by LC filters L2, C3, C12 and L3, C4, C13. This signal is connected to the ac switches.

8.2.5 REAR PANEL

The rear panel contains the ac line filter, the dc and ac input fuse, the 110/220 switch, and the external dc-input connector. The System Motherboard contains the line transient protectors, neon bulbs (NE1 and NE2) and varistors (VR1 and VR2).

LOW-VOLTAGE POWER SUPPLY (A3-A6)

Figure 8-1. Block Diagram

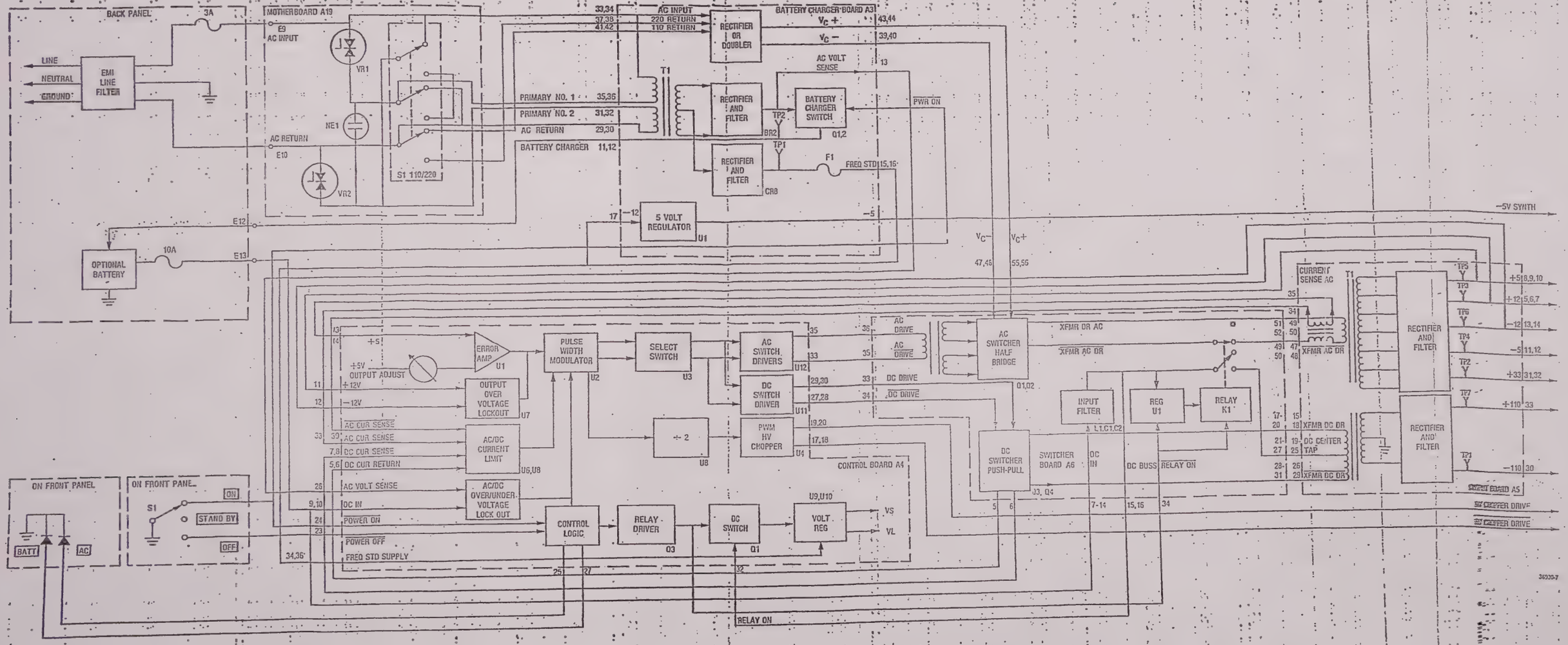

BATTERY CHARGER BOARD (A3)

(RTP-1008A)

Figure 8-2. Schematic

NOTES:

1. PARTIAL REFERENCE DESIGNATIONS ARE SHOWN. FOR COMPLETE DESIGNATIONS PREFIX WITH 1A3.
2. UNLESS OTHERWISE SPECIFIED:
   ALL RESISTORS ARE IN OHMS ± 5 PCT, 1/4 WATT.
   ALL CAPACITORS ARE IN UF.
   ALL INDUCTORS ARE IN UH.
   ALL VOLTAGES ARE IN DC.

LAST USED	NOT USED
BR2	
C6	
F1	
R8	
T1	
VR3	
CR7	CR2
Q2	
RT2	
TP2	
U1	

WARNING:
STATIC-SENSITIVE PARTS
HANDLE APPROPRIATELY

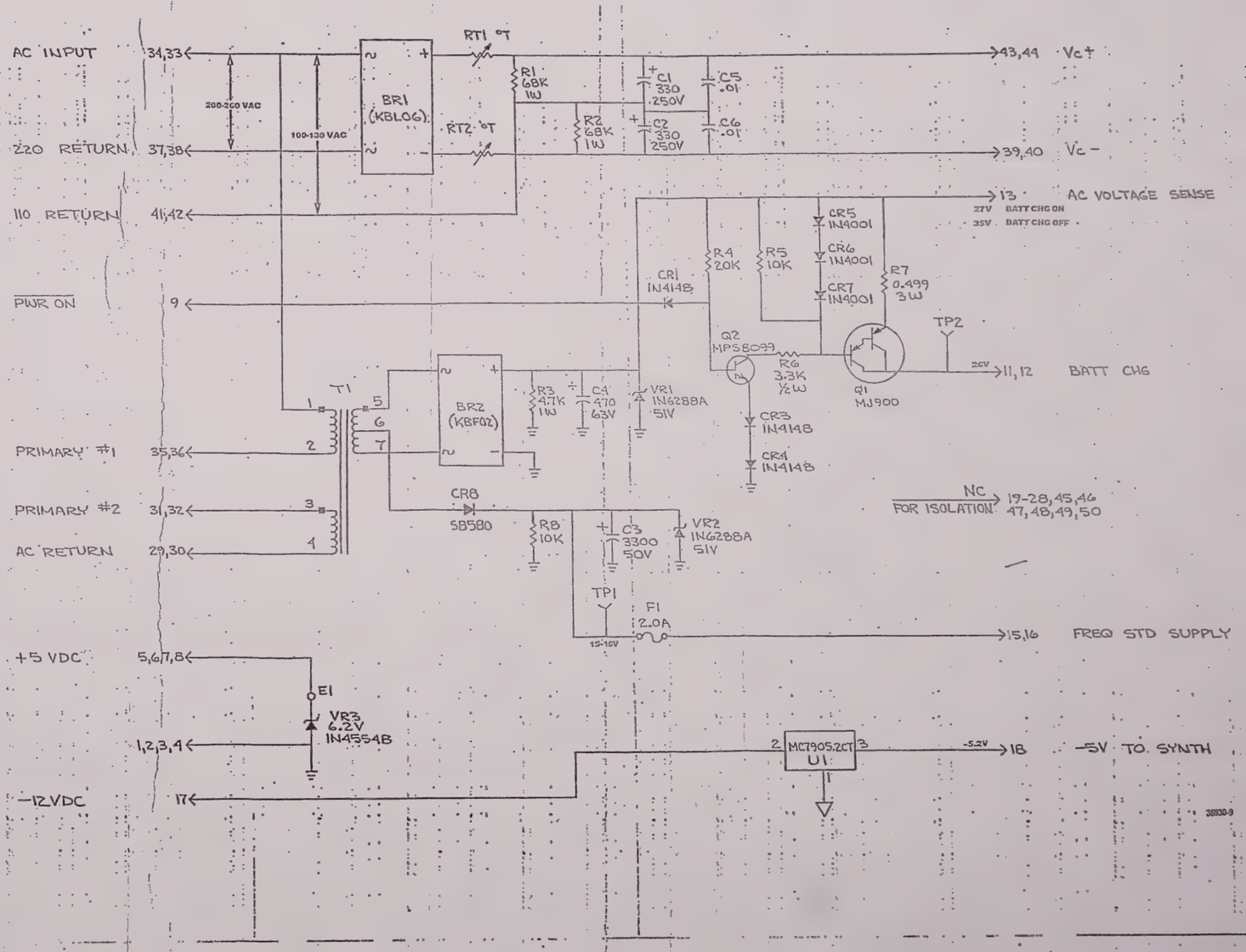

Figure 8-3. Printed Wiring Board Assembly and Parts List

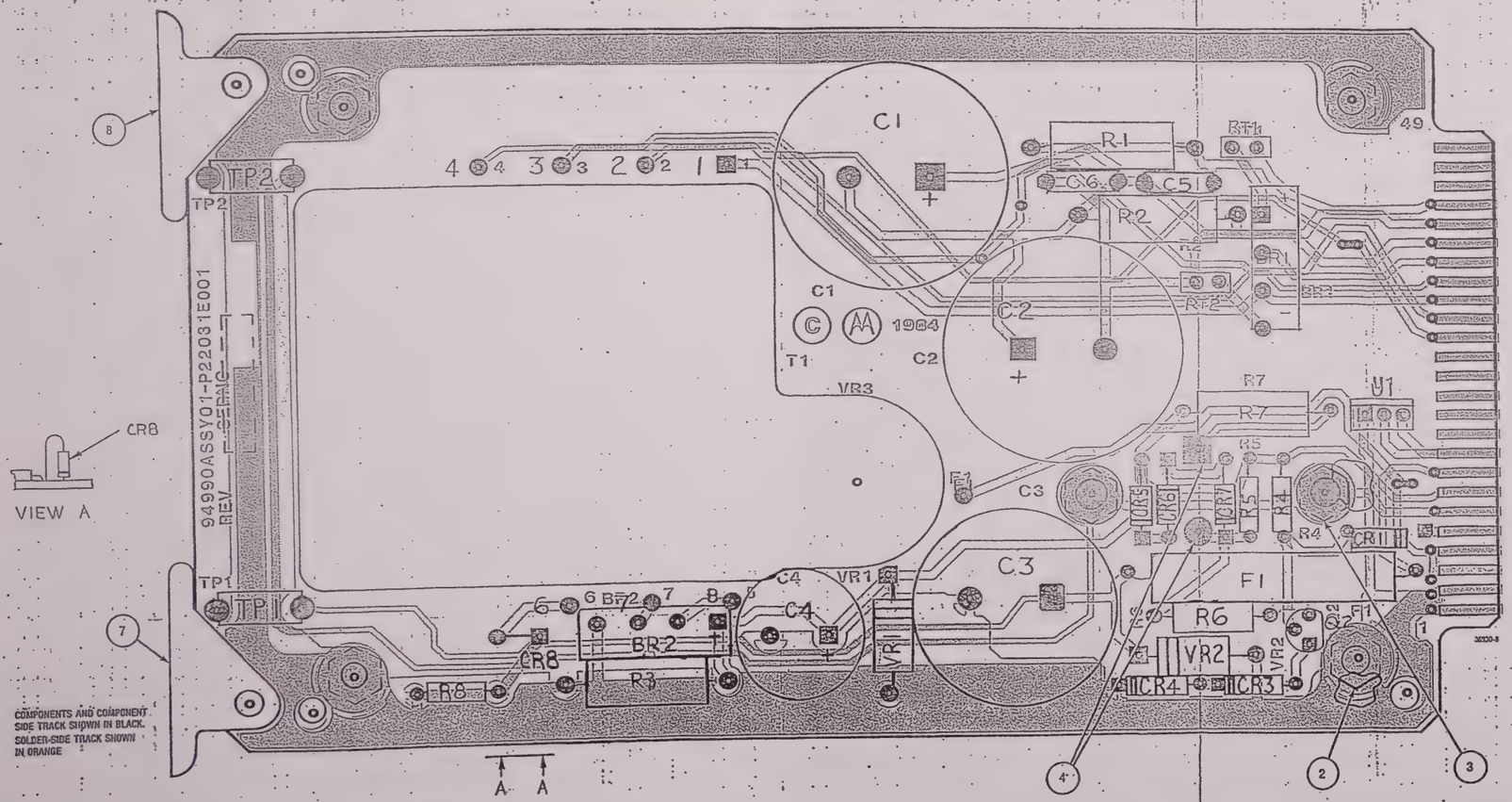

BATTERY CHARGER BOARD (A3)
RTP-1008A

Find No.	Qty. Req.	Part No.	Nomenclature	Part Value
002	4	43-80375B31	SPACER, SWAGE	
003	2	43-80375B32	SPACER, SWAGE	
004	2	09-80375B22	RECEPTACLE, COMPONENT	
007	1	45-80339B28	CARD EJECTOR	
008	1	45-80339B36	CARD EJECTOR	MARKED
BR001	1	48-80339B94	BRIDGE RECTIFIER	600V-6A
BR002	1	48-80339B93	BRIDGE RECTIFIER	
C001	1	23-80343B63	CAPACITOR	330UF-250
C002	1	23-80343B63	CAPACITOR	330UF-250
C003	1	23-80341B09	CAPACITOR	3300UF-50V
C004	1	23-80341B20	CAPACITOR	470UF-20-63
C005	1	08-80343B11	CAPACITOR	0.01UF-10-400
C006	1	08-80343B11	CAPACITOR	0.01UF-10-400
CR001	1	48-84463K02	DIODE	
CR003	1	48-84463K02	DIODE	
CR004	1	48-84463K02	DIODE	
CR005	1	48-82466H13	DIODE	
CR006	1	48-82466H13	DIODE	
CR007	1	48-82466H13	DIODE	
CR008	1	48-80343B22	DIODE,SCHOTTKY,SB580	80V
F001	1	65-80342B92	FUSE	
Q002	1	48-80345A51	TRANSISTOR	
R001	1	06-00126A33	RESISTOR	68K-5-1
R002	1	06-00126A93	RESISTOR	68K-5-1
R003	1	06-00126A65	RESISTOR	4700-5-1
R004	1	06-11009C89	RESISTOR	20K-5-1/4
R005	1	06-11009C73	RESISTOR	10K-5-1/4
R006	1	06-11045A61	RESISTOR	3.3K-5-1/2
R007	1	06-80370A44	RESISTOR	0.499-1-3
R008	1	06-11009C73	RESISTOR	10K-5-1/4
RT001	1	06-80342B85	THERMISTOR	
RT002	1	06-80342B85	THERMISTOR	
TP001	1	09-80331A89	JACK	WHITE
TP002	1	09-80331A89	JACK	WHITE
U001	1	51-80340B27	INTEGRATED CIRCUIT	
VR001	1	48-80342B21	DIODE,ZENER	
VR002	1	48-80342B21	DIODE,ZENER	

BATTERY CHARGER BOARD (A3)

(RTP-1008A)

Figure 8-4. Assembly and Parts List

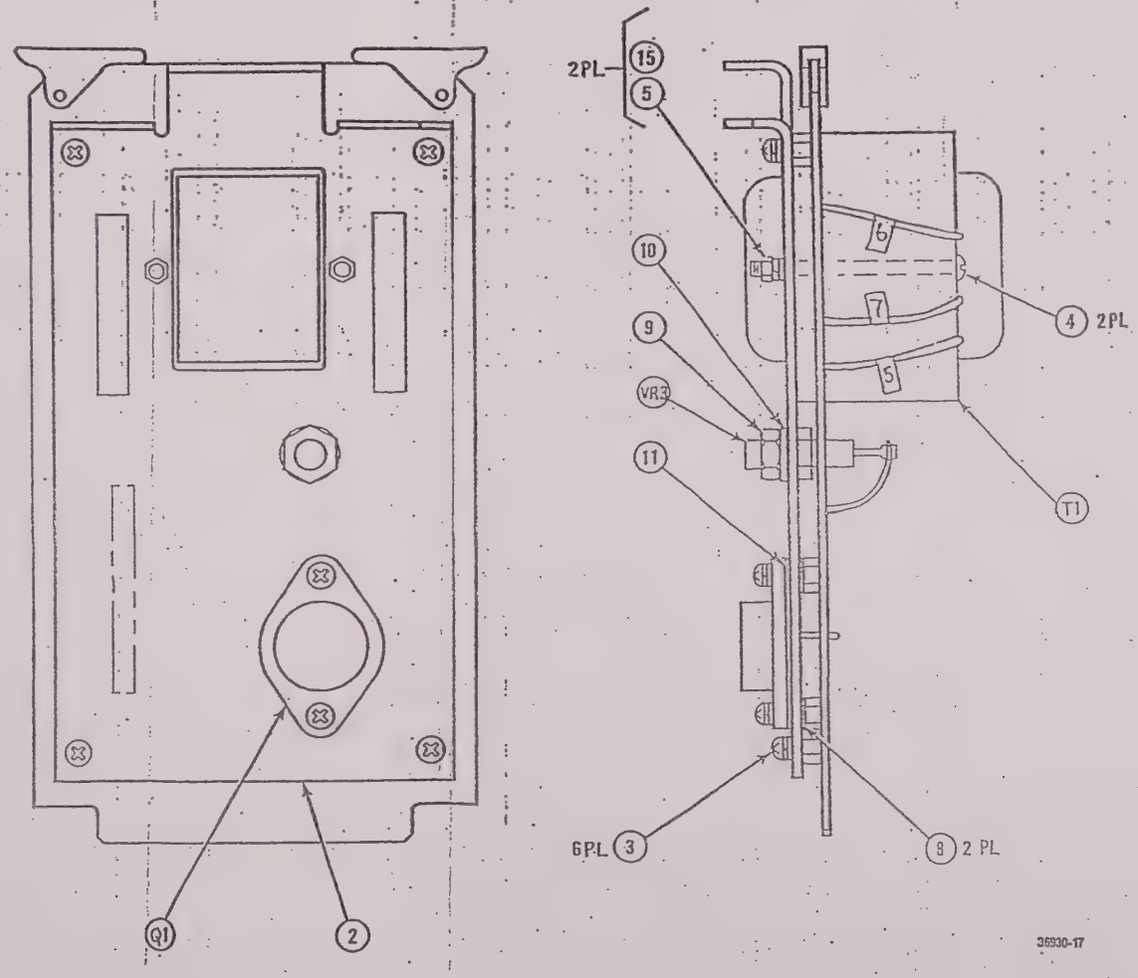

RTP-1008A

Find No.	Qty. Req.	Part No.	Nomenclature	Part Value
002	1	07-80344B99	BRACKET, TRANSFORMER MOUNT	
003	6	03-138148	SCREW, PH W/CAPT LOCK WASHER	4-40X.375
004	2	03-80342B30	SCREW	.1120-40X1.750
005	2	04-7657	WASHER, LOCK	.112
008	2	03-80375B11	WASHER, NYLON SHOULDER	
009	1	02-80375B36	NUT	
010	1	04-80375B35	WASHER, LOCK	
011	1	14-80370A92	INSULATOR, BREQUIST	
015	2	02-120466	NUT	.112-40
Q 001	1	48-80368A89	TRANSISTOR,PNP	
T 001	1	25-80342B55	TRANSFORMER	
VR003	1	48-80342B15	DIODE	

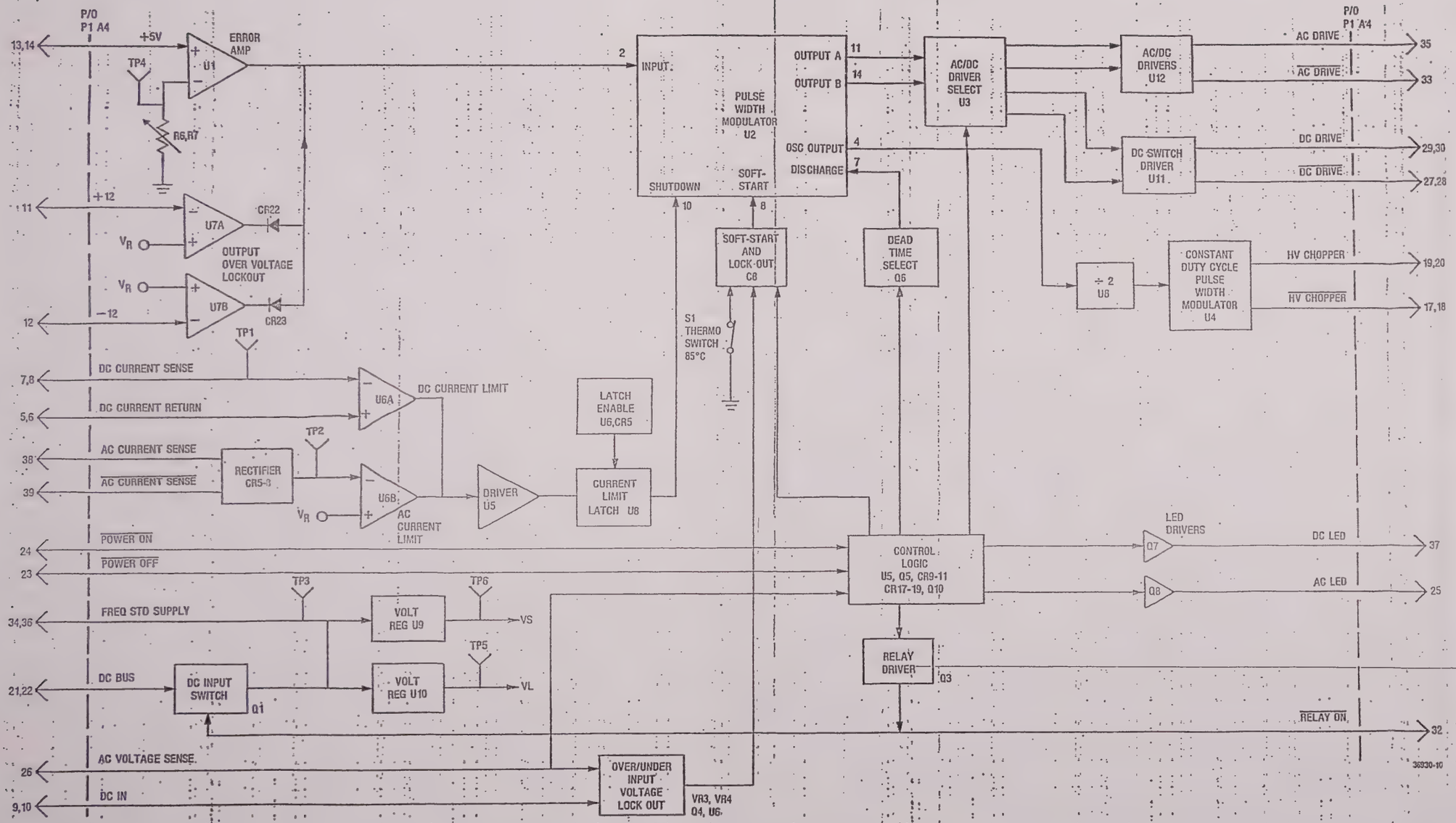

LOW-VOLTAGE POWER SUPPLY CONTROL BOARD (A4)
(RTP-1009A)

Figure 8-5. Block Diagram

LOW VOLTAGE POWER SUPPLY
CONTROL BOARD (A4)
(RTP-1009A)

Figure 8-6. Schematic

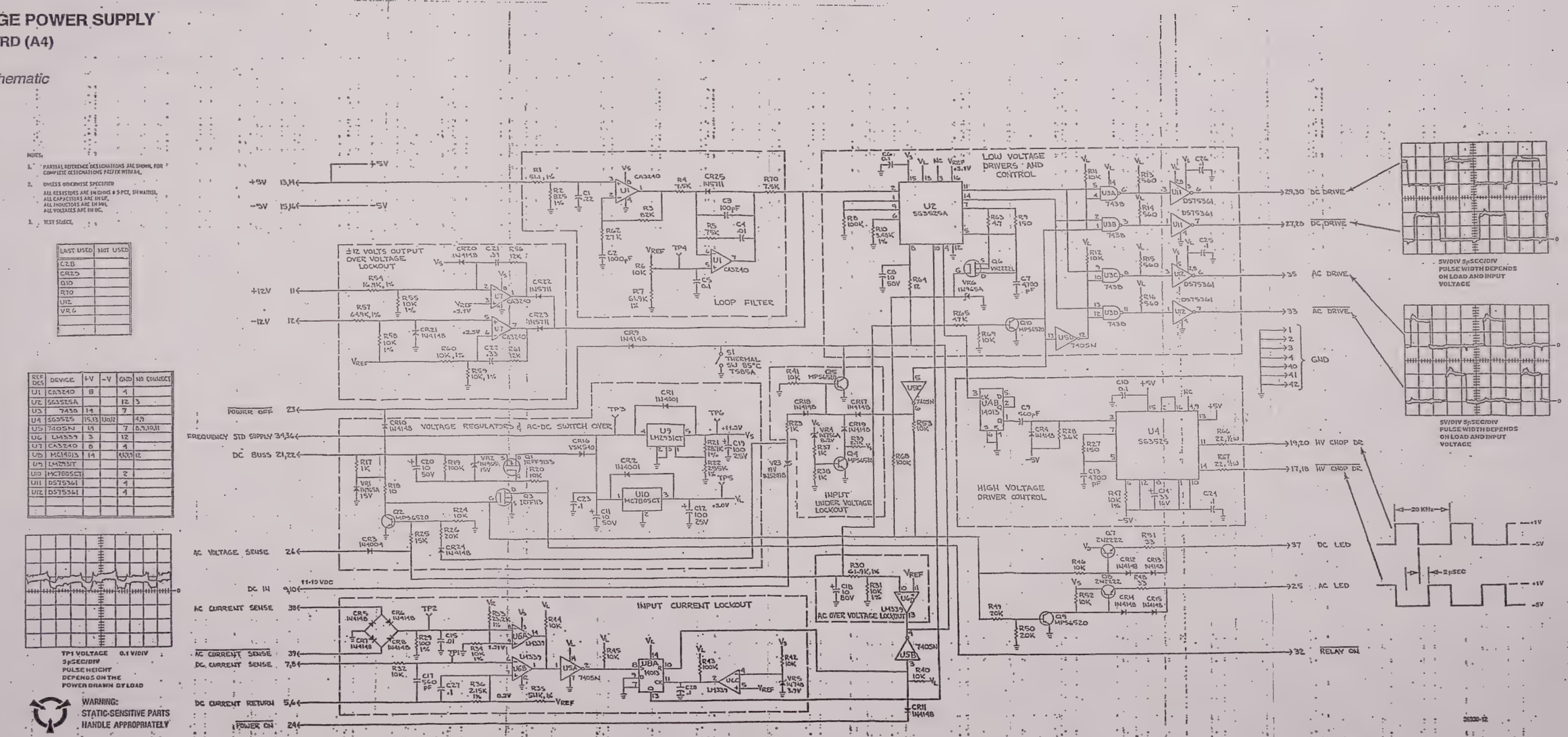

LOW-VOLTAGE POWER SUPPLY CONTROL BOARD (A4)

(RTP-1009A)

Figure 8-5. Block Diagram

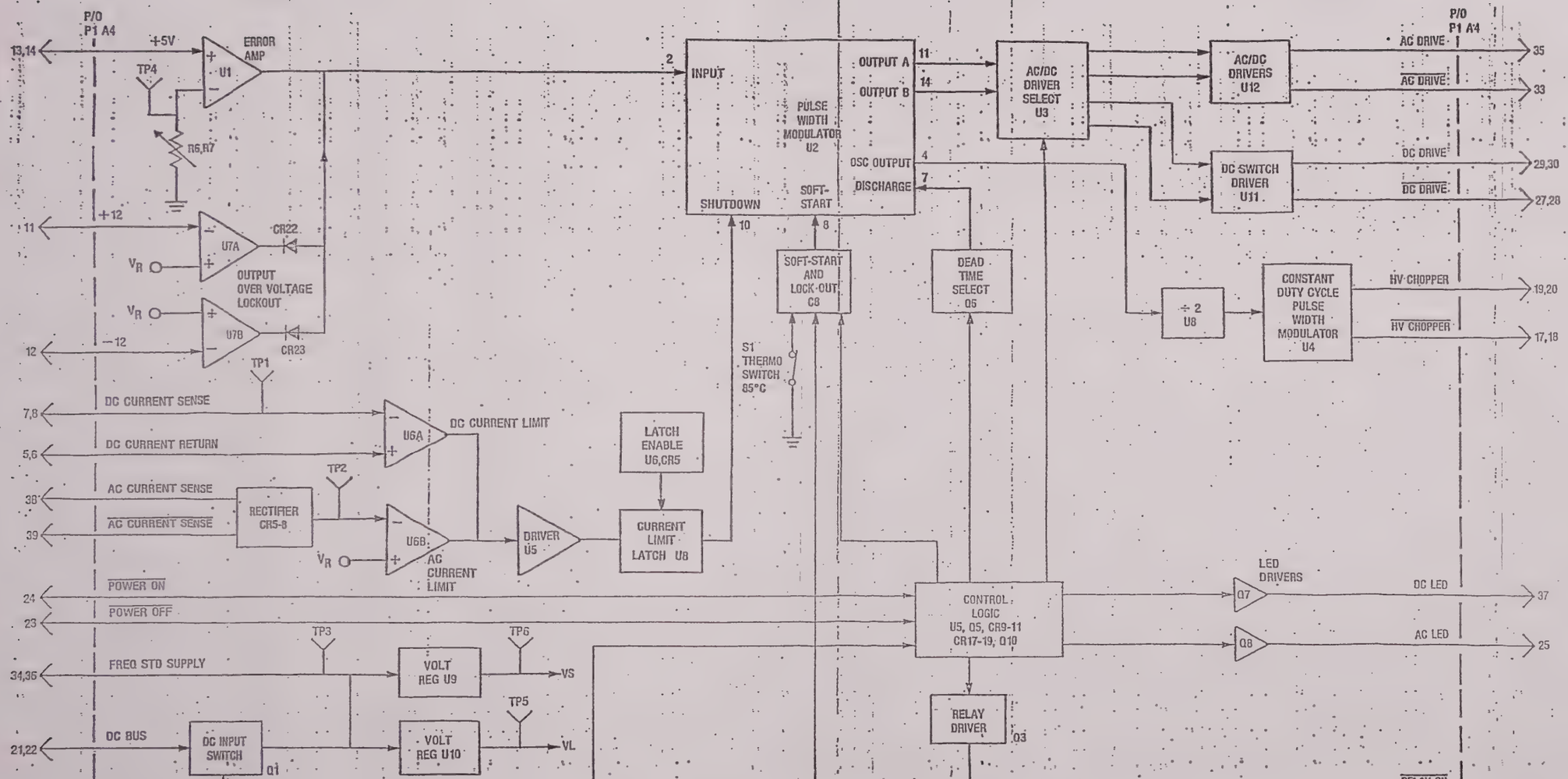

Find No.	Qty. Req.	Part No.	Nomenclature	Part Value
R 017	1	06-11009C49	RESISTOR	1K-5-1/4
R 018	1	06-11009C01	RESISTOR	10-5-1/4
R 019	1	06-11009C97	RESISTOR	100K-5-1/4
R 020	1	06-11009C73	RESISTOR	10K-5-1/4
R 021	1	06-10621D36	RESISTOR	28.7K-1-1/4
R 022	1	06-10621E28	RESISTOR	255K-5-1/4
R 023	1	06-11009C49	RESISTOR	1K-5-1/4
R 024	1	06-11009C73	RESISTOR	10K-5-1/4
R 025	1	06-11009C77	RESISTOR	15K-5-1/4
R 026	1	06-11009C80	RESISTOR	20K-5-1/4
R 027	1	06-11009C29	RESISTOR	150-5-1/4
R 028	1	06-11009C62	RESISTOR	3.6K-5-1/4
R 029	1	06-10621A97	RESISTOR	100-1-1/4
R 030	1	06-10621D68	RESISTOR	61.9K-1-1/4
R 031	1	06-10621C91	RESISTOR	10K-1-1/4
R 032	1	06-11009C73	RESISTOR	10K-5-1/4
R 033	1	06-10621D27	RESISTOR	23.2K-1-14
R 034	1	06-10621C91	RESISTOR	10K-1-1/4
R 035	1	06-10621D60	RESISTOR	51.1K-1-1/4
R 036	1	06-10621C27	RESISTOR	2.15K-1-1/4
R 037	1	06-11009C49	RESISTOR	1K-5-1/4
R 038	1	06-11009C49	RESISTOR	1K-5-1/4
R 039	1	06-11009C59	RESISTOR	2.7K-5-1/4
R 040	1	06-11009C73	RESISTOR	10K-5-1/4
R 041	1	06-11009C73	RESISTOR	10K-5-1/4
R 042	1	06-11009C73	RESISTOR	10K-5-1/4
R 043	1	06-11009C97	RESISTOR	100K-5-1/4
R 044	1	06-11009C73	RESISTOR	10K-5-1/4
R 045	1	06-11009C73	RESISTOR	10K-5-1/4
R 046	1	06-11009C73	RESISTOR	10K-5-1/4
R 047	1	06-10621C91	RESISTOR	10K-1-1/4
R 048	1	06-11009C13	RESISTOR	33-5-1/4
R 049	1	06-11009C80	RESISTOR	20K-5-1/4
R 050	1	06-11009C80	RESISTOR	20K-5-1/4
R 051	1	06-11009C13	RESISTOR	33-5-1/4
R 052	1	06-11009C73	RESISTOR	10K-5-1/4
R 053	1	06-11009C73	RESISTOR	10K-5-1/4
R 054	1	06-10621D14	RESISTOR	16.9K-1-1/4
R 055	1	06-10621C91	RESISTOR	10K-1-1/4
R 056	1	06-11009C75	RESISTOR	12K-5-1/4
R 057	1	06-10621D70	RESISTOR	64.9K-1-1/4
R 058	1	06-10621C91	RESISTOR	10K-1-1/4
R 059	1	06-10621C91	RESISTOR	10K-1-1/4
R 060	1	06-10621C91	RESISTOR	10K-1-1/4
R 061	1	06-11009C75	RESISTOR	12K-5-1/4
R 062	1	06-11009C83	RESISTOR	27K-5-1/4
R 063	1	06-80036G17	RESISTOR	4.7-5-1/4
R 064	1	06-11009C03	RESISTOR	12-5-1/4
R 065	1	06-11009C89	RESISTOR	47K-5-1/4
R 066	1	06-11045A09	RESISTOR	22-5-1/2
R 067	1	06-11045A09	RESISTOR	22-5-1/2
R 068	1	06-11009C97	RESISTOR	100K-5-1/4
R 069	1	06-11009C73	RESISTOR	10K-5-1/4
R 070	1	06-11009C70	RESISTOR	7.5K-5-1/4
S 001	1	40-80396A06	SWITCH,THERMAL	85 DEG C
TP001	1	09-80331A88	JACK	WHITE
TP002	1	09-80331A88	JACK	WHITE
TP003	1	09-80331A88	JACK	WHITE
TP004	1	09-80331A88	JACK	WHITE
TP005	1	09-80331A88	JACK	WHITE
TP006	1	09-80331A88	JACK	WHITE
U 001	1	51-80345A04	INTEGRATED CIRCUIT	CA3240E SCREENED
U 002	1	51-80340B78	INTEGRATED CIRCUIT	
U 003	1	51-80339B77	INTEGRATED CIRCUIT	
U 004	1	51-80340B78	INTEGRATED CIRCUIT	
U 005	1	51-80343B27	INTEGRATED CIRCUIT	7405N
U 006	1	51-83629M71	INTEGRATED CIRCUIT	
U 007	1	51-80345A04	INTEGRATED CIRCUIT	CA3240E SCREENED
U 008	1	51-05596E15	INTEGRATED CIRCUIT	
U 009	1	51-80340B01	INTEGRATED CIRCUIT	
U 010	1	51-84561L76	INTEGRATED CIRCUIT	
U 011	1	51-80339B78	INTEGRATED CIRCUIT	
U 012	1	51-80339B78	INTEGRATED CIRCUIT	
VR001	1	48-82256C59	DIODE,ZENER	15V-5-.5
VR002	1	48-82256C59	DIODE,ZENER	15V-10-.5
VR003	1	RG-1N5249B	DIODE,ZENER	19V-5-.5
VR004	1	48-83461E32	DIODE,ZENER	8.2V-5-.5
VR005	1	48-83461E19	DIODE,ZENER	3.9V-10-.5
VR006	1	48-82256C59	DIODE,ZENER	15V-10-.5

LOW-VOLTAGE POWER SUPPLY
OUTPUT BOARD (A5)
(RTP-1010A)

Figure 8-8. Schematic

NOTES:

1. PARTIAL REFERENCE DESIGNATIONS ARE SHOWN, FOR COMPLETE DESIGNATIONS PREFIX WITH A5.
2. UNLESS OTHERWISE SPECIFIED
   ALL RESISTORS ARE IN OHMS ± 5 PCT, 1/4 WATT(S).
   ALL CAPACITORS ARE IN UF.
   ALL INDUCTORS ARE IN MH.
   ALL VOLTAGES ARE IN DC.

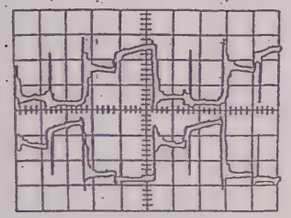

XFMR AC DR 49,50
CURRENT SENSE AC 34
CURRENT SENSE AC 35
XFMR AC DR 47,48
XFMR DC DR 15,16,17,18
DC CENTER TAP 19,20,21,22 23,24,25
XFMR DC DR 26,27,28,29
39,40,41,42 NC FOR ISOLATION 43,44,45,46

T1 T2 E1 E2 E3 E4 E5 E6 E7
CR2 CR3 CR4 CR5 CR6 CR7 CR8 CR9 CR10 CR11 CR12 CR13 CR14 CR15
C16 .01 R11 5.6 R12 5.6 C17 .01
L1 L2 L3 L4 L5 L6 L7
C2 150 50V R4 13K C9 1.0 50V VR1 IN5366B TP2 TP3
C3 6800 25V R5 2.0K C10 1.0 50V TP5
C4 680 50V R6 270 C11 1.0 50V TP4
C5 4700 10V R7 270 C12 1.0 50V VR2 IN5341B TP6
C6 2200 25V R8 3.3K C13 1.0 50V
C7 33 160V R9 110K C14 .01 400V TP7
C8 33 160V R10 110K C15 .01 400V TP1

31 +33V
32 +33V
5 +12V
6 +12V
7 +12V
8 +5V
9 +5V
10 +5V
11 -5V
12 -5V
13 -12V
14 -12V
30 -110V
33 +110V
1 2 3 4 36 37 38 GND

WARNING:
STATIC-SENSITIVE PARTS
HANDLE APPROPRIATELY

LAST USED	NOT USED
C17	C1
CR15	CR1
E7	
L7	
R12	R1-3
T2	
TP7	
VR2	

35930-11

8-13 / 8-14 blank)

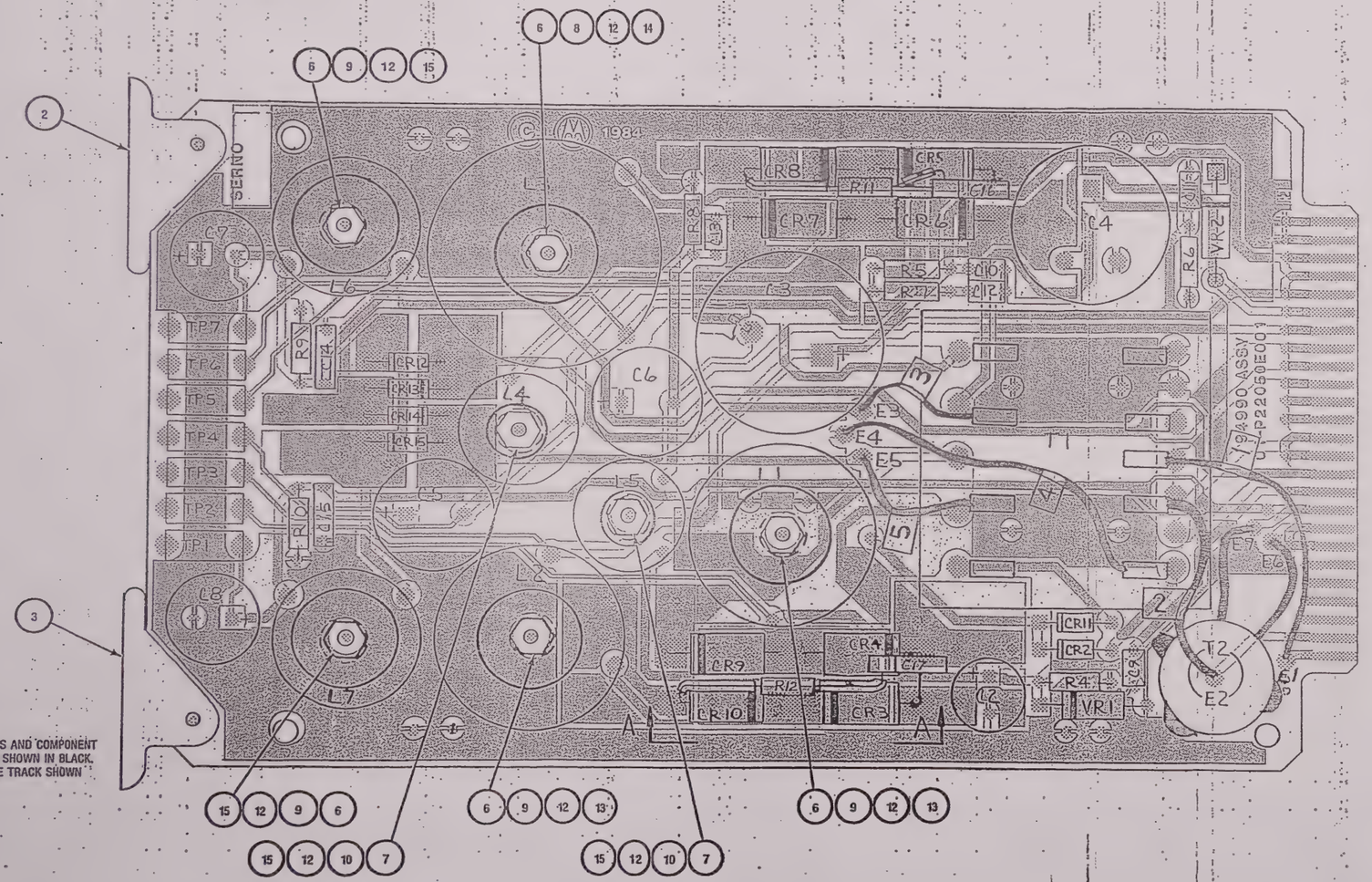

OUTPUT BOARD (A5)
RTP-1010A

Find No.	Qty. Req.	Part No.	Nomenclature	Part Value
002	1	45-80339B28	CARD EJECTOR	
003	1	45-80375B38	CARD EJECTOR	
005	5	04-80343B42	WASHER, NYLON SHOULDER	
007	2	04-80343B43	WASHER, NYLON SHOULDER	
008	1	03-80340B66	SCREW, ROUND HEAD NYLON	.112-40X1
009	4	03-80340B69	SCREW, ROUND HEAD NYLON	.112-40X.750
010	2	03-80340B70	SCREW, ROUND HEAD NYLON	.112-40X.625
012	7	02-80375B51	NUT, NYLON LOCK	.112-40X.124
013	2	14-80370A94	INSULATOR	
014	1	14-80370A95	INSULATOR	
015	4	14-80370A96	INSULATOR	
C002	1	23-80341B16	CAPACITOR	150UF-20-50
C003	1	23-80343B65	CAPACITOR	6800UF-20-25
C004	1	23-80343B59	CAPACITOR	68UF+50-10-50
C005	1	23-80341B10	CAPACITOR	4700UF-20-10
C006	1	23-80341B12	CAPACITOR	2200UF-20-25
C007	1	23-80341B06	CAPACITOR	33UF-20-160
C008	1	23-80341B06	CAPACITOR	33UF-20-160
C009	1	21-80342B46	CAPACITOR	1.0UF-20-50
C010	1	21-80342B46	CAPACITOR	1.0UF-20-50
C011	1	21-80342B46	CAPACITOR	1.0UF-20-50
C012	1	21-80342B46	CAPACITOR	1.0UF-20-50
C013	1	21-80342B46	CAPACITOR	1.0UF-20-50
C014	1	08-80343B11	CAPACITOR	.01UF-10-400
C015	1	08-80343B11	CAPACITOR	.01UF-10-400
C016	1	21-80372B73	CAPACITOR	.01UF-10-200
C017	1	21-80372B73	CAPACITOR	.01UF-10-200
CR002	1	48-80340B94	DIODE,400V	FAST RECOVERY
CR003	1	48-80343B23	DIODE,	100V SCHOTTKY
CR004	1	48-80343B23	DIODE,	100V SCHOTTKY
CR005	1	48-80343B23	DIODE,	100V SCHOTTKY
CR006	1	48-80343B23	DIODE,	100V SCHOTTKY
CR007	1	48-80343B23	DIODE,	100V SCHOTTKY
CR008	1	48-80343B23	DIODE,	100V SCHOTTKY
CR009	1	48-80343B23	DIODE,	100V SCHOTTKY
CR010	1	48-80343B23	DIODE,	100V SCHOTTKY
CR011	1	48-80340B95	DIODE	800V FAST RECOVERY
CR012	1	48-80340B95	DIODE,800V	FAST RECOVERY
CR013	1	48-80340B95	DIODE,800V	FAST RECOVERY
CR014	1	48-80340B95	DIODE,800V	FAST RECOVERY
CR015	1	48-80340B95	DIODE,800V	FAST RECOVERY
L001	1	24-80342B56	INDUCTOR	15MH
L002	1	24-80342B57	INDUCTOR	150UH
L003	1	24-80342B58	INDUCTOR	180UH
L004	1	24-80342B59	INDUCTOR	500UH
L005	1	24-80342B60	INDUCTOR	200UH
L006	1	24-80342B61	INDUCTOR	100MH
L007	1	24-80342B61	INDUCTOR	100MH
R 004	1	05-11009C76	RESISTOR	13K-5-1/4
R 005	1	05-11009C56	RESISTOR	2K-5-1/4
R 006	1	05-11009C35	RESISTOR	270-5-1/4
R 007	1	05-11009C35	RESISTOR	270-5-1/4
R 008	1	05-11009C51	RESISTOR	3.3K-5-1/4
R 009	1	05-11009C98	RESISTOR	110K-5-1/4
R 010	1	05-11009C98	RESISTOR	110K-5-1/4
R 011	1	05-00124B63	RESISTOR	5.6-5-1/4
R 012	1	05-00124B63	RESISTOR	5.6-5-1/4
T 001	1	25-80342B62	TRANSFORMER	
T 002	1	25-80342B63	TRANSFORMER	
TP001	1	09-80331A88	JACK	WHITE
TP002	1	09-80331A88	JACK	WHITE
TP003	1	09-80331A88	JACK	WHITE
TP004	1	09-80331A88	JACK	WHITE
TP005	1	09-80331A88	JACK	WHITE
TP006	1	09-80331A88	JACK	WHITE
TP007	1	09-80331A88	JACK	WHITE
VR001	1	48-80342B18	DIODE,ZENER	39V-5-5
VR002	1	48-80342B17	DIODE,ZENER	6.2-5-5

LOW-VOLTAGE POWER SUPPLY
OUTPUT BOARD (A5)
(RTP-1010A)

Figure 8-9a. Printed Wiring Board Assembly and Parts List

8-15/16

LOW-VOLTAGE POWER SUPPLY
SWITCHER BOARD (A6)
(RTP-1011A)

Figure 8-10. Schematic

NOTES:

1. PARTIAL REFERENCE DESIGNATIONS ARE SHOWN. FOR COMPLETE DESIGNATIONS PREFIX WITH A6.
2. UNLESS OTHERWISE SPECIFIED
   ALL RESISTORS ARE IN OHMS ± 5 PCT, 1/4 WATT(S).
   ALL CAPACITORS ARE IN UF.
   ALL INDUCTORS ARE IN MH.
   ALL VOLTAGES ARE IN DC.
3. FOR 28V OPTION REMOVE CONDUCTIVE TRACK BETWEEN EMITTER AND COLLECTOR OF Q OPT AND ADD OPTIONAL COMPONENTS.

LAST USED	NOT USED
C15	C6,C9,C13
CR4	
K1	
L3	
Q4	
R24	R2,R3,R7
U1	R8,R9,R10
T1	R16,R17
VR7	

WARNING:
STATIC-SENSITIVE PARTS
HANDLE APPROPRIATELY

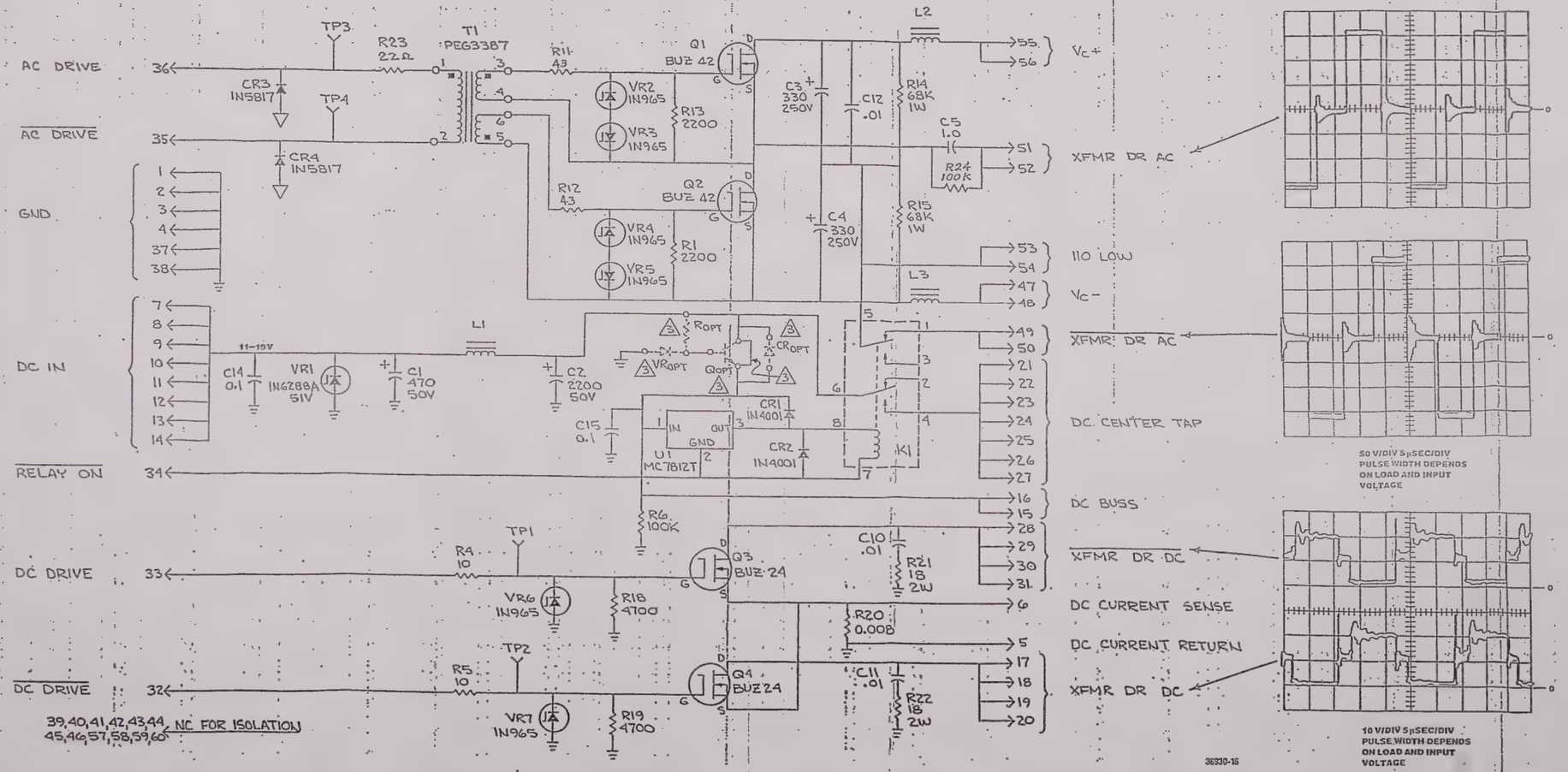

8-17/18 blank

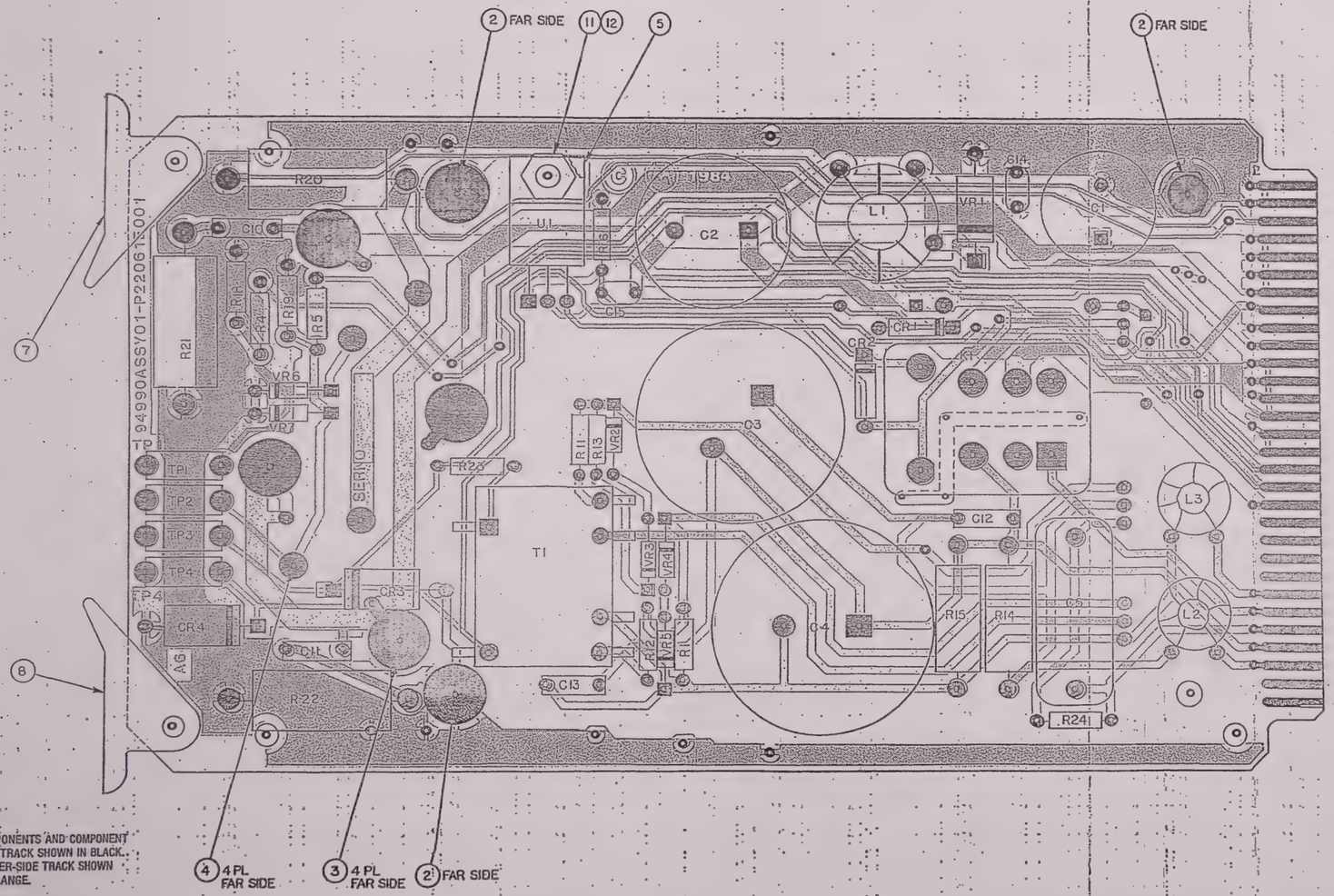

COMPONENTS AND COMPONENT SIDE TRACK SHOWN IN BLACK. SOLDER-SIDE TRACK SHOWN IN ORANGE.

SWITCHER BOARD (A6)
RTP-1011A

Find No.	Qty. Req.	Part No.	Nomenclature	Part Value
002	3	43-80375B31	SPACER, SWAGE	
003	4	43-80375B32	SPACER, SWAGE	
004	41	09-80341B42	RECEPTACLE,COMPONENT	
005	1	14-80344B21	INSULATOR,T0220	BERQUIST
007	1	45-80339B28	CARD EJECTOR	
008	1	45-80339B29	CARD EJECTOR	MARKED
011	1	02-80340B06	NUT,NYLON LOCK	.1120-40
012	1	03-80340B69	SCREW,ROUND HEAD NYLON	.1120-40X0.25
C001	1	23-80341B19	CAPACITOR	470UF-20-50
C002	1	23-80341B09	CAPACITOR	2200UF-50
C003	1	23-80343B63	CAPACITOR	330UF-20-250
C004	1	23-80343B63	CAPACITOR	330UF-20-250
C005	1	23-80340B93	CAPACITOR	1.0UF-20-250
C010	1	09-80343B11	CAPACITOR	0.01UF-10-400
C011	1	09-80343B11	CAPACITOR	0.01UF-10-400
C012	1	09-80343B11	CAPACITOR	0.01UF-10-400
C013	1	09-80343B11	CAPACITOR	0.01UF-10-400
C014	1	21-80342B10	CAPACITOR	.1UF-20-50
C015	1	21-80342B10	CAPACITOR	.1UF-20-50
CR001	1	48-82656H13	DIODE	
CR002	1	48-82656H13	DIODE	
CR003	1	48-80342B20	DIODE	
CR004	1	48-80342B20	DIODE	
K001	1	80-80340B09	RELAY	10A-DPDT
L001	1	24-80342B64	INDUCTOR	5UH
L002	1	24-80342B65	INDUCTOR	23UH
L003	1	24-80342B65	INDUCTOR	23UH
R001	1	05-11009C57	RESISTOR	2.2K-5-1/4
R004	1	05-11009C01	RESISTOR	10-5-1/4
R005	1	05-11009C01	RESISTOR	10-5-1/4
R006	1	05-11009C97	RESISTOR	100K-5-1/4
R011	1	05-00124A16	RESISTOR	43-5-1/4
R012	1	05-00124A16	RESISTOR	43-5-1/4
R013	1	05-11009C57	RESISTOR	2.2K-5-1/4
R014	1	05-00126A93	RESISTOR	68K-5-1
R015	1	05-00126A93	RESISTOR	68K-5-1
R018	1	05-11009C65	RESISTOR	4.7K-5-1/4
R019	1	05-11009C65	RESISTOR	4.7K-5-1/4
R020	1	05-02340D08	RESISTOR	0.05-1-2
R021	1	05-00127A07	RESISTOR	18-5-2
R022	1	05-00127A07	RESISTOR	18-5-2
R023	1	05-11009C09	RESISTOR	22-5-1/4
R024	1	05-00124A97	RESISTOR	100K-5-1/4
T001	1	25-80343B78	TRANSFORMER	
TP001	1	09-80331A88	JACK	WHITE
TP002	1	09-80331A88	JACK	WHITE
TP003	1	09-80331A88	JACK	WHITE
TP004	1	09-80331A88	JACK	WHITE
U001	1	51-84621K22	INTEGRATED CIRCUIT	
VR001	1	48-80342B21	DIODE,ZENER	
VR002	1	48-82256C59	DIODE,ZENER	15V-20-.5
VR003	1	48-82256C59	DIODE,ZENER	15V-20-.5
VR004	1	48-82256C59	DIODE,ZENER	15V-20-.5
VR005	1	48-82256C59	DIODE,ZENER	15V-20-.5
VR006	1	48-82256C59	DIODE,ZENER	15V-20-.5
VR007	1	48-82256C59	DIODE,ZENER	15V-20-.5

Figure 8-11. Printed Wiring Board Assembly and Parts List

LOW-VOLTAGE POWER SUPPLY

SWITCHER BOARD (A6)

(RTP-1011A)

Figure 8-12. Assembly and Parts List

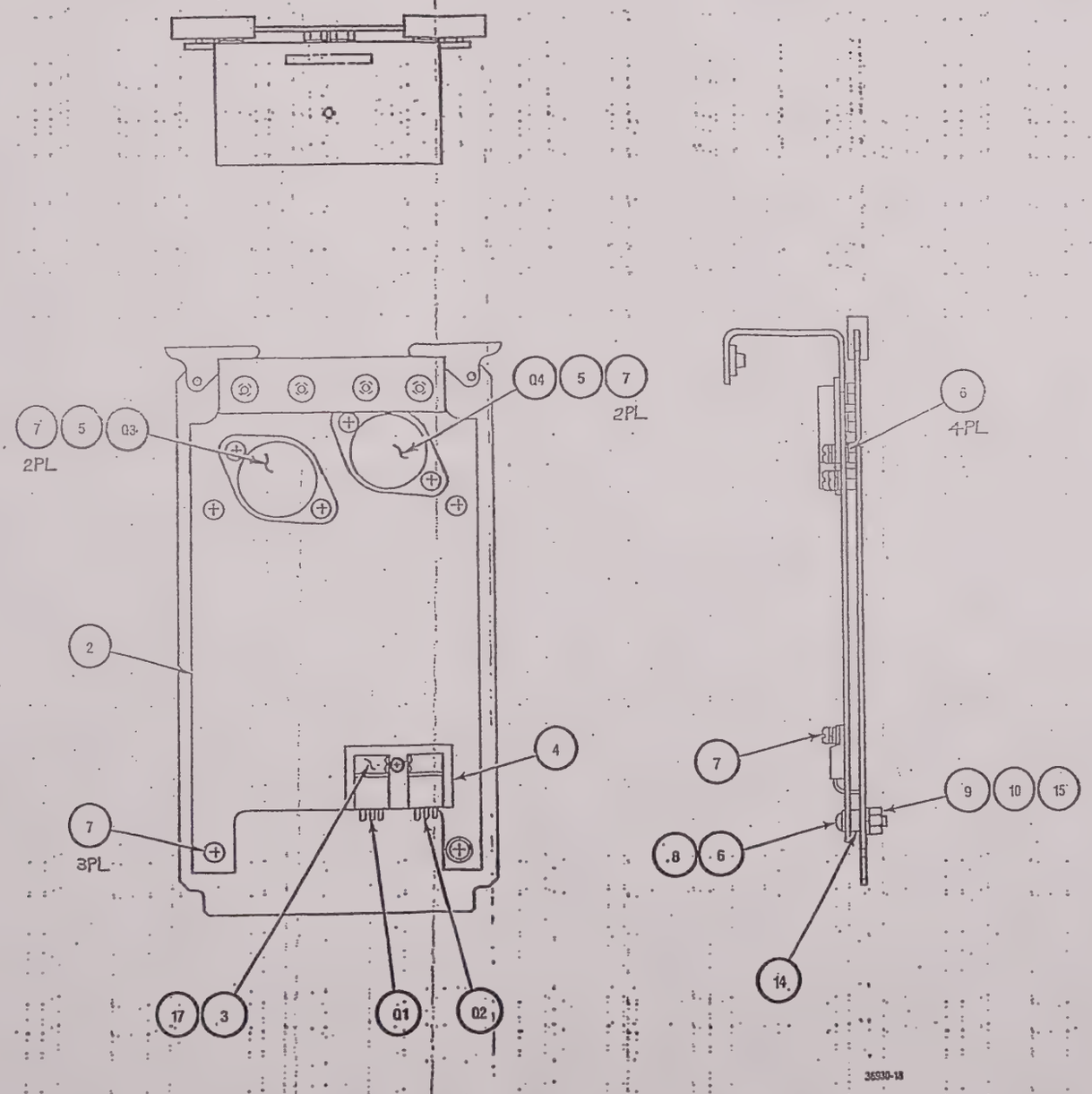

SWITCHER BOARD (A6)
RTP-1011A

Find No.	Qty. Req.	Part No.	Nomenclature	Part Value
002	1	26-80375B10	HEATSINK	
003	1	42-80375B15	RETAINER	
004	1	14-80370A93	INSULATOR	
005	2	14-80370A92	INSULATOR, BREQUIST	
006	5	03-80375B11	WASHER, NYLON SHOULDER	
007	8	03-138148	SCREW, PH W/CAPT LOCK WASHER	4-40X.375
008	1	03-139818	SCREW	.112-40X.438
009	1	04-140358	WASHER	.112
010	1	04-9777	WASHER, LOCK	.112
014	1	43-80343871	SPACER	1/4" ROUND
015	1	02-120486	NUT	.112-40
017	1	42-80375B16	RETAINER	
Q001	1	48-80339B04	TRANSISTOR,MOSFET	
Q002	1	48-80339B04	TRANSISTOR,MOSFET	
Q003	1	48-80339B03	TRANSISTOR,MOSFET	
Q004	1	48-80339B03	TRANSISTOR,MOSFET	

SECTION 9.
SCOPE/DVM CONTROL BOARD (A7)

9.1 DESCRIPTION

The primary function of the Scope/DVM Control board is to route the required measurement and viewing signals to the digital voltmeter (DVM) and scope circuitry. A large portion of the displayed data is determined by DVM measurements on internal signal points. Thus, for a rapid update of several data displays, several internal signal points must be time-division multiplexed to the DVM. The DVM Control circuitry and the system processor provide this function.

With the Scope Control circuitry, the user can choose to display either data information, or signals for internal modulation or demodulation, or external scope inputs. The horizontal sweep provided for the spectrum-analyzer display is coherent with the synthesizer sweep generator. The coherent horizontal sweep and synthesizer sweep can be used for an external filter-alignment display. An external horizontal input is also possible.

The Scope/DVM Control board also contains the 1-kHz notch filter and the rectifier circuit used for distortion measurements.

A block diagram of the Scope/DVM Control board is shown at the end of this section in Figure 9-1, a schematic in Figure 9-2, and the printed wiring board assembly and parts list in Figure 9-3.

9.2 THEORY OF OPERATION

9.2.1 SCOPE VERTICAL CONTROL

The input to the scope vertical amplifier is switched by the scope vertical-select switch (U6) to one of four sources: the range switch (VERT FROM RNG SW), the vertical character-sweep generator, the spectrum analyzer (SPECT ANA VERT), or the 700-kHz IF. Inputs to the range switch, which are routed through the range switch on the Front-Panel Interface board (A15), come from either 1) the scope's vertical-input port on the front panel or 2) the internal modulation signals, as selected by this board's control circuitry for modulation display. The vertical character sweep is a sawtooth waveform generated by the vertical character-sweep generator and synced by the VERT CHAR SYNC signal from the character generator on the Processor board (A14). The detected and amplified output of the Receiver logarithmic IF is the vertical input for the spectrum analyzer. The remaining signal source is the second IF signal from the Receiver for IF envelope observation.

9.2.2 DUAL-DISPLAY CONTROL

The dual-display control circuitry produces a screen with a single row of characters at the top of the CRT and a display for either the spectrum analyzer or the scope. This function is implemented with the vertical sweep control by alternating the signal for the spectrum analyzer or the range switch with the signal for the vertical character sweep.

The dual-display sequence starts with the synthesizer sweep generator (U12, U51A, U59A), which is common to the displays for both the spectrum analyzer and the scope. This sweep generator is started with a pulse of the SYNTH 100 Hz input signal, which fires the one-shot U12B. This also enables the scope Z-axis. Now the display for either the spectrum analyzer or the scope is being traced on the CRT.

When the synthesizer sweep reaches 2.5 Vdc (that is, the scope's horizontal sweep is at the edge of the screen), the dual-display control circuitry (U10B, U11, U12A, Q6) activates the $\overline{\text{CHAR GEN RST}}$ line. This switches the scope's vertical and horizontal inputs to the character-sweep generators. The vertical sweep generator (U3, U4) determines the CRT frame rate of 61 Hz. The horizontal character-sweep generator (U60) determines the row rate of 7812.5 Hz; eight rows make a character height. The vertical and horizontal character generators are synchronized by the character generator on the Processor board (A14).

When the first line of characters has been traced, a transition on the $\overline{\text{LINE 1}}$ input from the A14 board resets both character-sweep generators, and increments the character counter (U13). This causes LINE 1 to be traced again. This process is repeated four times, at which point the counter output resets the scope inputs to "spectrum analyzer" or "range switch." During the retrace time, the scope Z-axis is blanked by U30D and is held off until the synthesizer sweep starts. The timing of the process allows the four character traces to be completed before the next synthesizer sweep-sync.

9.2.3 SCOPE HORIZONTAL CONTROL

Switching for the scope horizontal input is divided between two boards. The timebase generator and the external horizontal input are selected on the Scope Amplifier board (A2). The horizontal character-sweep generator and the signals for the synthesizer sweep generator are selected on the A7 board by the scope horizontal switches (U52A and U52D) and sent to the INT SCOPE HORIZ signal line.

Table 9-1. Internal DVM Inputs

DVM Inputs	Function
+ Peak Voltage	Positive modulation measurements
− Peak voltage	Negative modulation measurements
Carrier Level	RF output level
RF INPUT PWR	Power level applied to the RF Input/Output port
EXT FWD PWR	Forward power level on external inline-wattmeter element
EXT RFL PWR	Reflected power level on external inline-wattmeter element
BATT VOLT	Voltage level at dc input port on the rear panel divided by 10
SIG STRENGTH VOLTAGE	DC level proportional to the level in dBm of the received signal
Distortion Meter Input	DC level proportional to the signal power at the input of the SINAD/DISTORTION notch filter

9.2.9 EXTERNAL DVM/DISTORTION CONTROL

External DVM and distortion inputs to the front panel port are ranged by processor control over four decades on the Front-Panel Interface board (A15). The resulting output is routed to the DVM FROM RNG SWITCH input of the A7 board. This signal is input to the DVM/Distortion Select circuitry (U30B and U30C) and the gain stage of 6.5 (U62) preceding the 1-kHz notch filter.

9.2.10 DISTORTION MEASUREMENT

In the distortion mode, the DVM/Distortion Select circuitry routes the output of the 1-kHz notch filter (U62 and U63) to the EXTERNAL DVM TO A/D output pin. This output pin is connected to the rms-to-dc converter on the A11 board. The output of the rms-to-dc converter is multiplexed to the A/D converter and read by the processor. The input to the notch filter is rectified and filtered by U3, and applied to the Internal DVM Select for reading by the processor (as discussed in paragraph 9.2.8). To obtain the percent distortion for a 1-kHz input, the processor divides the rms output voltage of the notch filter by the average rectified input voltage to the notch filter. The notch filter has a processor-controlled gain that is switched to either ×10 or × 1.0, depending on input distortion and signal levels.

9.2.11 EXTERNAL DVM MEASUREMENT

In the external DVM mode, the DVM FROM RNG SWITCH input is routed by the DVM/Distortion Select circuitry directly to the EXT DVM TO A/D output. At this point, it is connected to the rms-to-dc converter on the A11 board. The output of the rms-to-dc converter is multiplexed to the A/D converter, where it is read by the processor.

9.2.12 AUDIO AMPLIFIER AND ALARM GENERATOR

An astable multi-vibrator (U61 and U50) operating at 1.2 kHz is the alarm generator. The alarm signal, controlled by the processor, is summed with the VOL CNTL AUD RTN signal at the input of the audio amplifier (U7). The SPEAKER AUDIO output of the amplifier has a 0.5W capability and is connected directly to the system speaker.

9.2.13 BOARD CONTROL

Processor control of the Scope/DVM Control board is via three signal lines: the AF ADD BUS 0-3, the AF DATA BUS 0-3, and the $\overline{\text{AF BUS EN 1}}$. The four address bits are decoded by the address decoder (U46) to determine which control latch the four bits of data will be latched into. The latching process is synchronized by the $\overline{\text{AF BUS EN 1}}$ line. Control latches in addition to those necessary for controlling this board (A7) provide control for the Scope Amplifier board (SCOPE SWP 0-2) and part of the RF Input module (ANTENNA ENABLE).

SECTION 10.
RECEIVER BOARD (A8)

10.1 DESCRIPTION

The Receiver board recovers baseband signals and determines input-carrier levels. The 10.7-MHz IF input signal can be amplitude (AM), frequency (FM), or single sideband (SSB) modulated with the baseband information.

Separate detectors are provided for AM, FM, and SSB; the demodulated outputs are routed to the audio filters.

Selectable high-pass and low-pass filters then further process the baseband signal before it leaves the Receiver board. Separate board outputs provide baseband signals to the front panel, to the circuitry for determining modulation level, and to the speaker amplifier.

Input-carrier level is determined by a logarithmically responding amplifier. The amplitude of the output signal from the log amplifier is proportional to the log of the input-carrier level. This output, which is used for the spectrum-analyzer mode, also provides a signal-strength level for the squelch circuitry.

The system processor provides primary control of the Receiver board's functions via a serial data bus. The data bus uses a single data line, a clock line, and a latch-enable line to serially shift control information from the Processor board to the Receiver board.

Block diagrams of the Receiver board and its functions are shown at the end of the section in Figure 10-1a-e, a schematic in Figure 10-2, and the printed wiring board assembly and parts list in Figure 10-3.

10.2 THEORY OF OPERATION

10.2.1 LINEAR IF SECTION

10.2.1.1 General

The linear IF section consists of 1) a tuned, gain-controlled filter amplifier with switchable bandwidths, 2) an AGC amplifier, 3) an overload detector driven by the AM-detected output, and 4) an AM detector. RF outputs are provided to the scope, the FM limiter, the SSB-product detector and the logarithmic amplifier. The AM demodulated audio signal is provided to the audio-filter circuits.

A block diagram of the linear IF amplifier is shown in Figure 10-1b at the end of the section.

10.2.1.2 Pre-Selector

The linear IF is preceeded by a pre-selector. This limits the number of out-of-band signals reaching the pre-amplifier and provides a good termination for the first mixer/low-pass filter located on A17A2. The pre-selector is fixed-tuned without adjustment and has a bandwidth of 2 MHz (Q = 5).

10.2.1.3 Pre-Amplifier/Filter

The pre-selector is followed by a low-noise pre-amplifier(a grounded gate with a source follower) with a gain of 28 dB. This pre-amplifier provides good impedance-matching for input/output of the mixer and FL301 (a 6-pole ceramic filter with a bandwidth of 280 kHz), as well as the ability to handle high-level signals. The high gain of this pre-amplifier negates both the 9-dB loss associated with FL301 and the 3-dB power-split following the filter. FL301 determines the wideband frequency response and rejection of the Receiver and logarithmic amplifier (log amp).

10.2.1.4 Active Power Split

A matched pair of parallel, grounded-gate J Fet amplifiers equally split the received signal between the linear IF and log IF. The grounded-gate amplifier provides isolation between the two IF strips as well as a good impedance match for the output of FL301. No automatic gain control (AGC) is applied before this point to maintain calibration of the log amp. This requires a high dynamic-range amplifier inherent in the grounded-gate approach.

10.2.1.5 Switched IF Filters and 10.7-MHz Amplifier

The IF bandwidth is determined by a wideband/narrowband filter-set, selectable under software control. Switching occurs downstream of the log-amp pick-off, in order to maintain log-amp calibration. FL303, (a 2-pole, wideband ceramic filter) reduces image noise to the mixer in wideband mode. FL302 sets the narrowband pre-detection bandwidth and adjacent-channel rejection of the Receiver. Q305 serves as an AGC'd amplifier to terminate the filters and isolate them from the active mixer (U302). Diodes driven by U301 (an RS232 driver) do the filter-switching. This provides level translation and drive capability from the control circuit.

10.2.2.7 Log-Amp Gain and Offset Adjust

To convert the log-amp detector's output to the equired level for the Scope Amplifier's input, an operational amplifier (U206A) is configured as an inverting amplifier to perform the overall gain and offset scaling. To compensate the TC of the logging IC, the offset voltage is temperature-tracked via CR204. The output voltage is 50 mV/dB with −80 dBm, providing 0.0 Vdc out. The absolute output depends on the losses in the A17.

10.2.2.8 Base-Line Limiter

The spectrum-analyzer display is base-line limited to prevent the display from dropping below the bottom of the screen. A precision rectifier circuit (U206 and CR203) clamps the log-amp output whenever it goes below −2.000 volts.

10.2.2.9 Offset Buffer Amplifier

The log-amp's calibrated output from U206A is amplified and offset to conform with the System Analyzer's internal DVM. This DVM requires a unipolar input with a 0 to 10V range.

10.2.3 FM/SSB/WB SIGNAL-PRESENT DETECTORS

10.2.3.1 General

In addition to AM detection, which is described in the linear IF section 10.2.1.8, the Receiver incorporates a pulse-counting FM discriminator, a product detector/BFO for SSB/CW demodulation, and a wideband signal-present detector. The latter tests for the presence of a sufficiently strong signal for the Scan Lock function and flags the CPU when a signal of sufficient amplitude is present.

A block diagram of the FM/SSB/WB signal-present detector is shown at the end of the section in Figure 10-1d.

10.2.3.2 IF Limiter

The IF output is hard-limited by Q310/Q311 configured as an emitter-coupled amplifier with positive feedback. A high-speed, CMOS hex-inverter (U310) buffers the limiter's output to the pulse-counting discriminator and to the IF/BFO frequency-counter select gate. The limiter will provide an accurate frequency to the counter in the presence of as much as 90 percent AM.

10.2.3.3 Pulse-Counting Discriminator

The pulse-counting (averaging) technique is used for FM demodulation. That is, a constant width and amplitude pulse is generated for each zero-crossing of the IF signal. The pulses are then averaged in an RC low-pass filter to generate a voltage proportional to the input frequency. The output is then a dc voltage proportional to the average frequency, with the FM-demodulated signal riding on top. The Receiver uses a dual-edge, triggered monostable (U311/U312) to provide a pulse with each zero-crossing, thereby doubling the carrier frequency and easing the filtering requirements. Differential amplification by U313 removes the dc offset and increases detection-gain by 6 dB. The pulse width is set for a 50 percent duty cycle at 700 kHz, the nominal IF-center frequency. U314A provides additional filtering and FM-gain calibration.

10.2.3.4 Product Detector

Reinjection of the carrier in a product detector demodulates SSB and CW. An active mixer (U317) performs the detection; it requires a low-level BFO-injection signal minimizing shielding requirements. Q313 and Q314 form a feedback filter amplifier to 1) amplify the detected SSB/CW output, 2) filter the IF/BFO components, and 3) provide a low output impedance to the audio filters.

10.2.3.5 BFO

The BFO (Q306) is a modified Colpitts-type oscillator with gate-bias AGC. The oscillator nominal frequency of 700 kHz is adjustable ±3 to 5 kHz from the front panel. Select-in-test C377 provides centering of C394's adjustment range. As a buffer, Q307 isolates the BFO from the product detector and the frequency counter. Under software control, Q315 disables the BFO when the Receiver is not in SSB mode.

10.2.3.6 Wideband Signal-Present Detector

The wideband signal-present detection circuit is used only for the Scan Lock function. U307 provides an amplified (40 dB) signal to the frequency counter via counter-output select gate U315, which, in conjunction with the 20-MHz low-pass filter following the first mixer on A17A2, allows the System Analyzer to determine the frequency of a signal within 20 MHz of the L.O. frequency. U308 monitors the signal strength of the incoming signals. When the input signal is of sufficient level and the L.O. is within 20 MHz, U308 flags the microprocessor, which then determines the frequency. U308 is set to trip at a nominal level of −50 dBm into A8J1, the Receiver input.

10.2.3.7 Counter-Output Select Gate

The BFO, the limited-IF output, or the wideband signal-present output are selected and routed to the internal frequency counter under software control via U315. The Processor board then determines the error frequency relative to the programmed L.O. frequency that is displayed on the CRT in receive mode.

SCOPE/DVM CONTROL BOARD (A7)

(RTC-1006A)

Figure 9-1a. Block Diagram (Sheet 1 of 2)

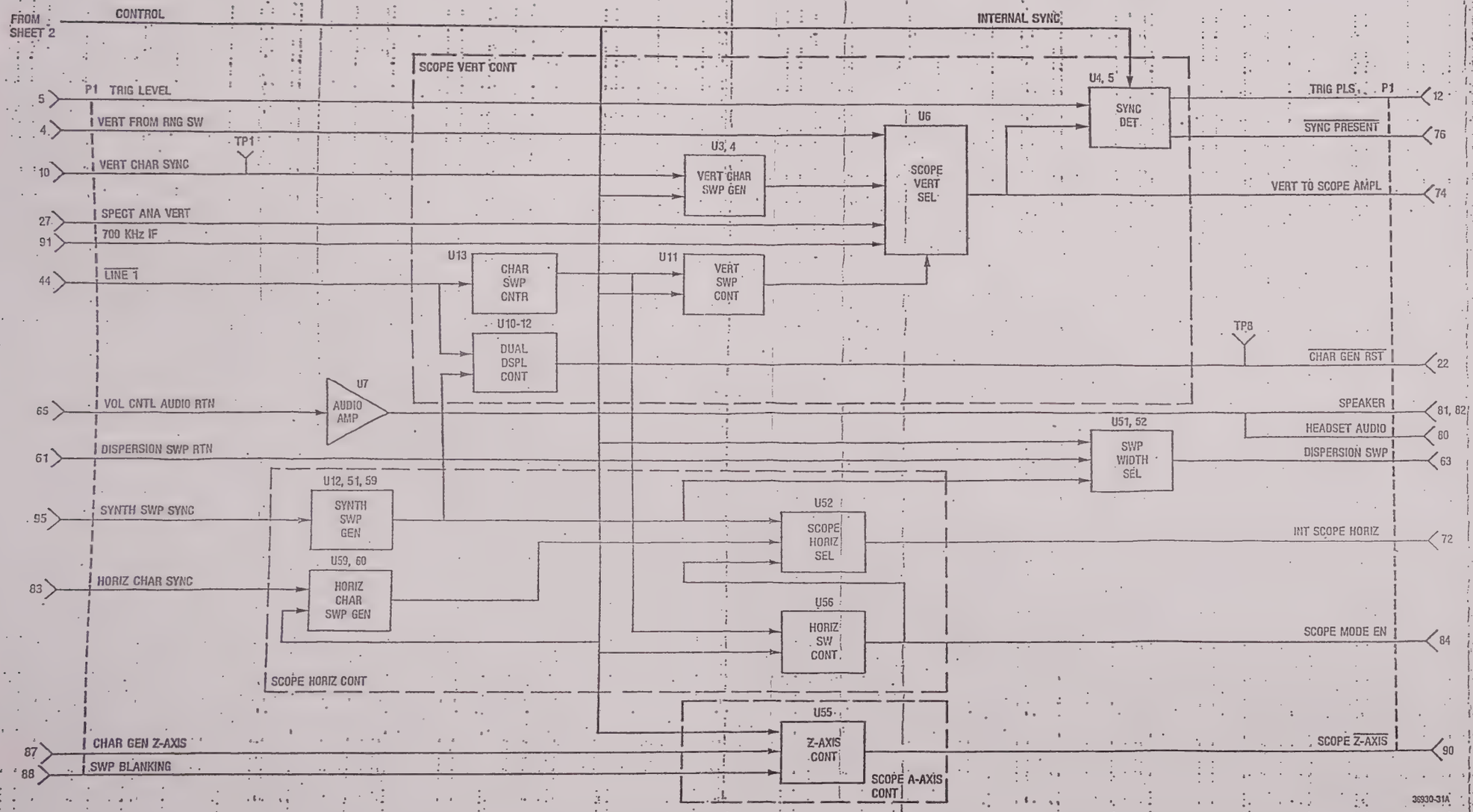

SCOPE/DVM CONTROL BOARD (A7)

(RTC-1006A)

Figure 9-1b. Block Diagram (Sheet 2 of 2)

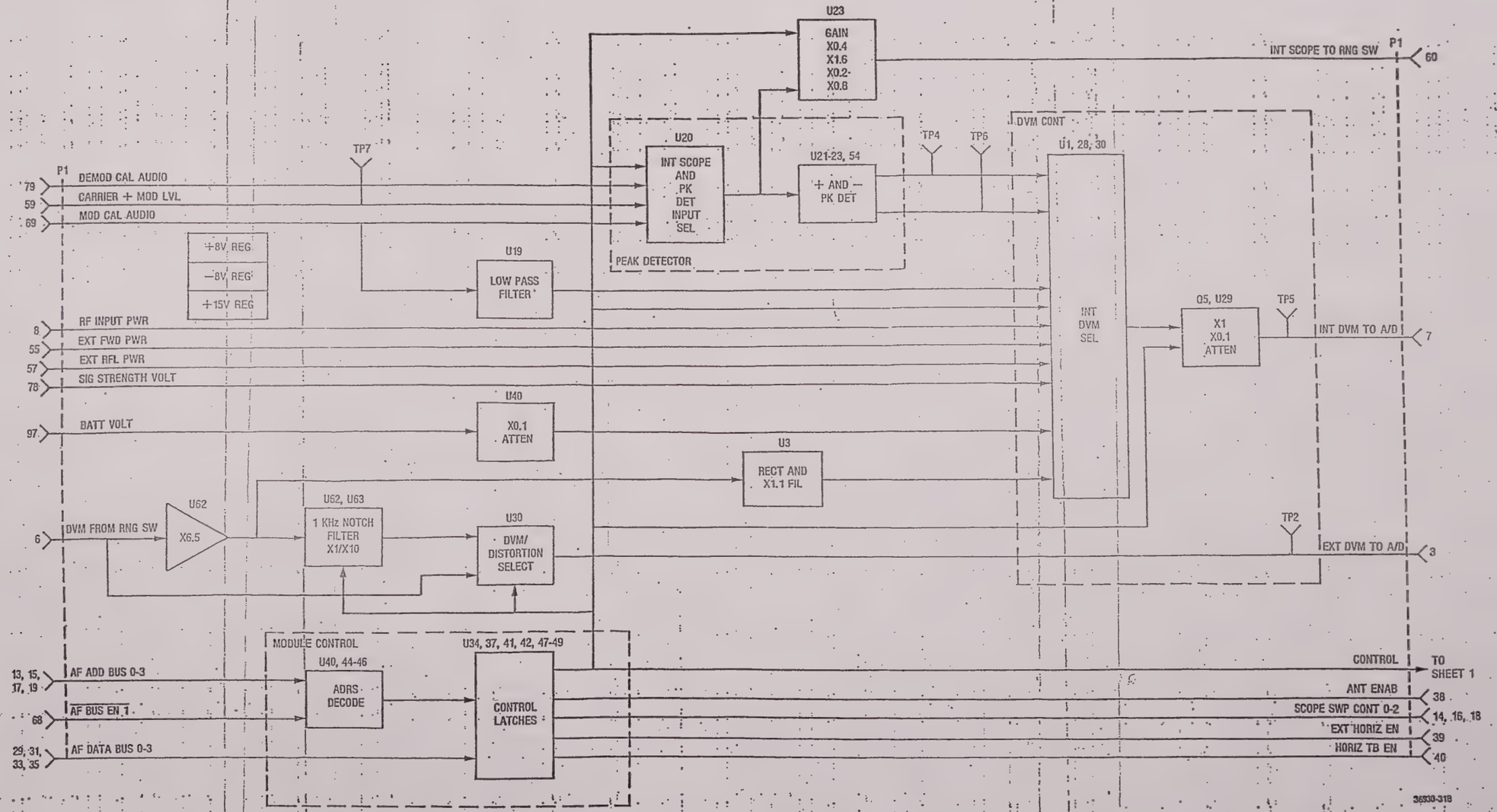

SCOPE/DVM CONTROL BOARD (A7)

(RTC-1006A)

Figure 9-2a. Schematic (Sheet 1 of 4)

NOTES:

1. PARTIAL REFERENCE DESIGNATIONS ARE SHOWN. FOR COMPLETE DESIGNATIONS PREFIX WITH 1A7.
2. FOR REFERENCE DRAWINGS REFER TO ASSY NO. 01-P220XX.
3. UNLESS OTHERWISE SPECIFIED
   ALL RESISTORS ARE IN OHMS ± 5% PCT, 1/4 WATRS.
   ALL CAPACITORS ARE IN UF.
   ALL INDUCTORS ARE IN UH.
   ALL VOLTAGES ARE IN DC.

REF DES	DEVICE	GND	+V MIN	-V MIN	NO CONNECT
U1	HI-201-5	5,14	-12/14	-12/4	12
U2					
U3	MLM324		-12/4	-12/11	
U4	LM393		-15/8	-15/4	
U5	MC14528		-15/16	-15/11	9
U6	HI-201-5	5	-12/13	-12/4	12
U7	LM386	6		-12/4	1,7,8
U8					
U9					
U10	LM393		-15/8	-15/4	
U11	MC14011		-15/14	-15/7	
U12	MC14528		-15/16	-15/12,13	7,10
U13	MC14017		-15/16	-15/11	1-7,9,11,12
U17	MC14066	23,6	-12/14	-12/7	8,9
U19	CA3160	4	-15/7		15,[illegible]
U20	HI-201-5	5	-12/13	-12/4	12
U21	CA3140		-15/7	-12/4	8
U22	CA3240		-15/8	-12/4	
U23	CA3240	3	-12/8	-12/4	
U24	MC14001		14	7	
U25					
U26	CA3140		-15/7	-12/4	8
U27					
U28	DG508	14	-15/13	-12/3	
U29	LM308		-15/7	-15/4	5
U30	HI-201-5	5,7	-12/13	-12/4	12
U34	MC14042	8	-15/6,16		3,15,12,10
U37	MC14042		-15/6,16	-15/11	1,2,9,11
U38	MC14555		-15/16	-15/12,13	
U39					
U40	LM324		-12/4	-12/11	1,2,3,8,9,10
U41	MC14042		-15/6,16	-15/11	1,10
U42	MC14042		-15/6,16	-15/11	3,9,12,15
U43	LM324		-15/4	-15/11	
U44	LM324		-15/4	-15/11	
U45	MC14011		-15/14	-15/7	
U46	MC14028		-15/16	-15/11	4,5,9
U47	MC14042		-15/6,16	-15/11	9,12,15
U48	MC14042		-15/6,16	-15/11	3,9,12,15
U49	MC14042		-15/6,16	-15/11	3,9,12,15
U50	MC14001		-15/14	-15/7	
U51	LM324	9	-12/4	-12/11	
U52	MC14066	9,4	-15/14	-15/7	
U53					
U54	LM393		-15/8	-12/4	
U55	74LS02	7	-15/14		
U56	MC14001		-15/14	-15/7	
U57					
U58	MC1403	3	-12/1		4,5,6,7,8
U59	LM393		-15/6	-15/4	
U60	CA3140		-12/7	-12/4	1,5,8
U61	MC14049		-15/8	-15/8	6,13,16
U62	CA3240		-15/8	-15/4	
U63	CA3240		-15/8	-15/4	
U64	MC14066	12	-15/14	-15/7	10,11
U65	MC1415	3	-11/1		

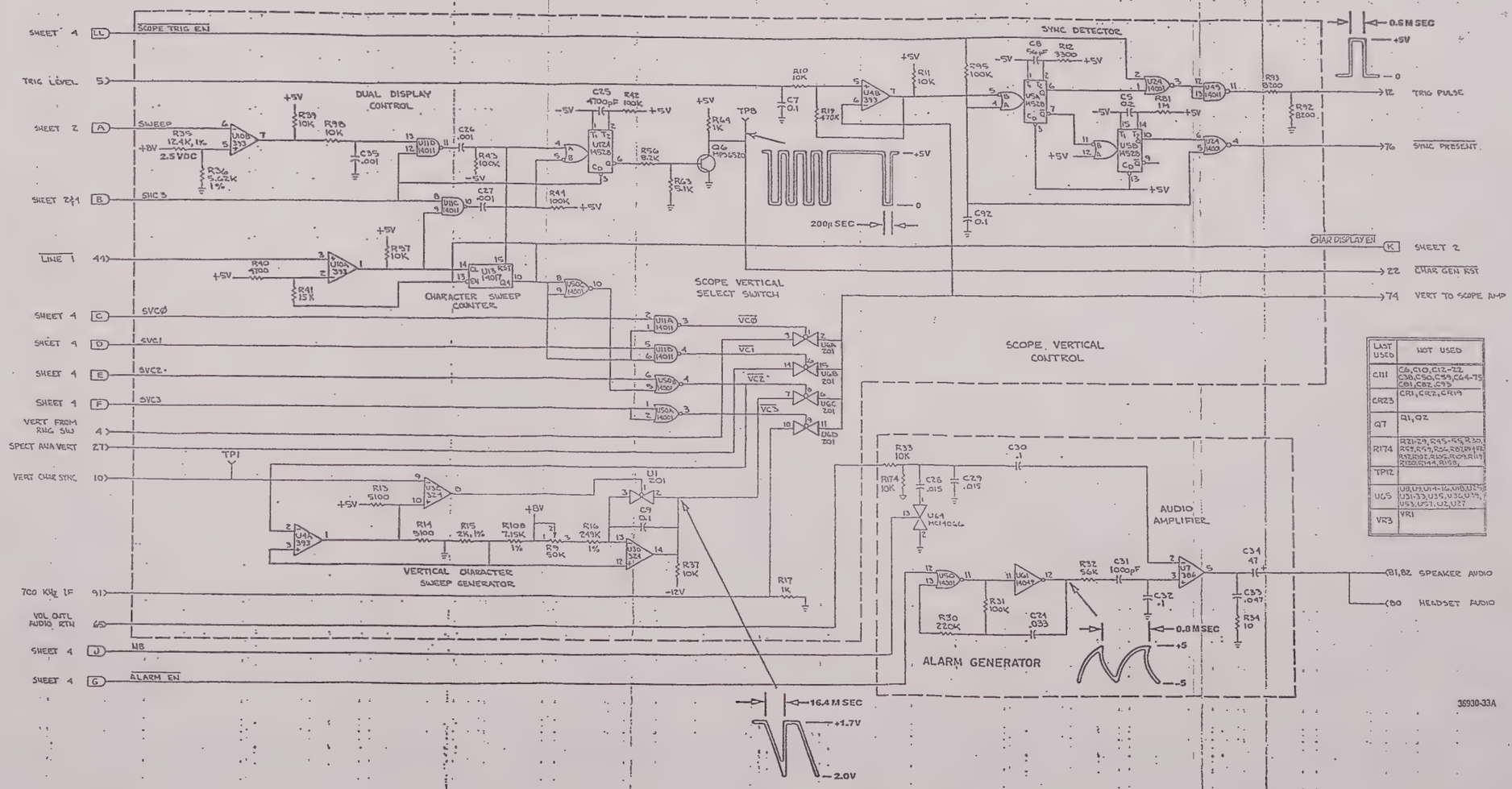

LAST USED	NOT USED
C111	C6,C10,C12-22, C38,C50,C59,C64-75, C81,C82,C93
CR23	CR1,CR2,CR19
Q7	Q1,Q2
R174	R21-29,R45-55,R30, R58,R59,R86,R87,R94,R97,R102,R105,R109,R119, R120,R144,R158,
TP12	
U65	U8,U9,U14-16,U18,U25, U31-33,U35,U36,U39, U53,U57,U2,U27
VR3	VR1

WARNING:
STATIC-SENSITIVE PARTS
HANDLE APPROPRIATELY

SCOPE/DVM CONTROL BOARD (A7)

(RTC-1006A)

Figure 9-2b. Schematic (Sheet 2 of 4)

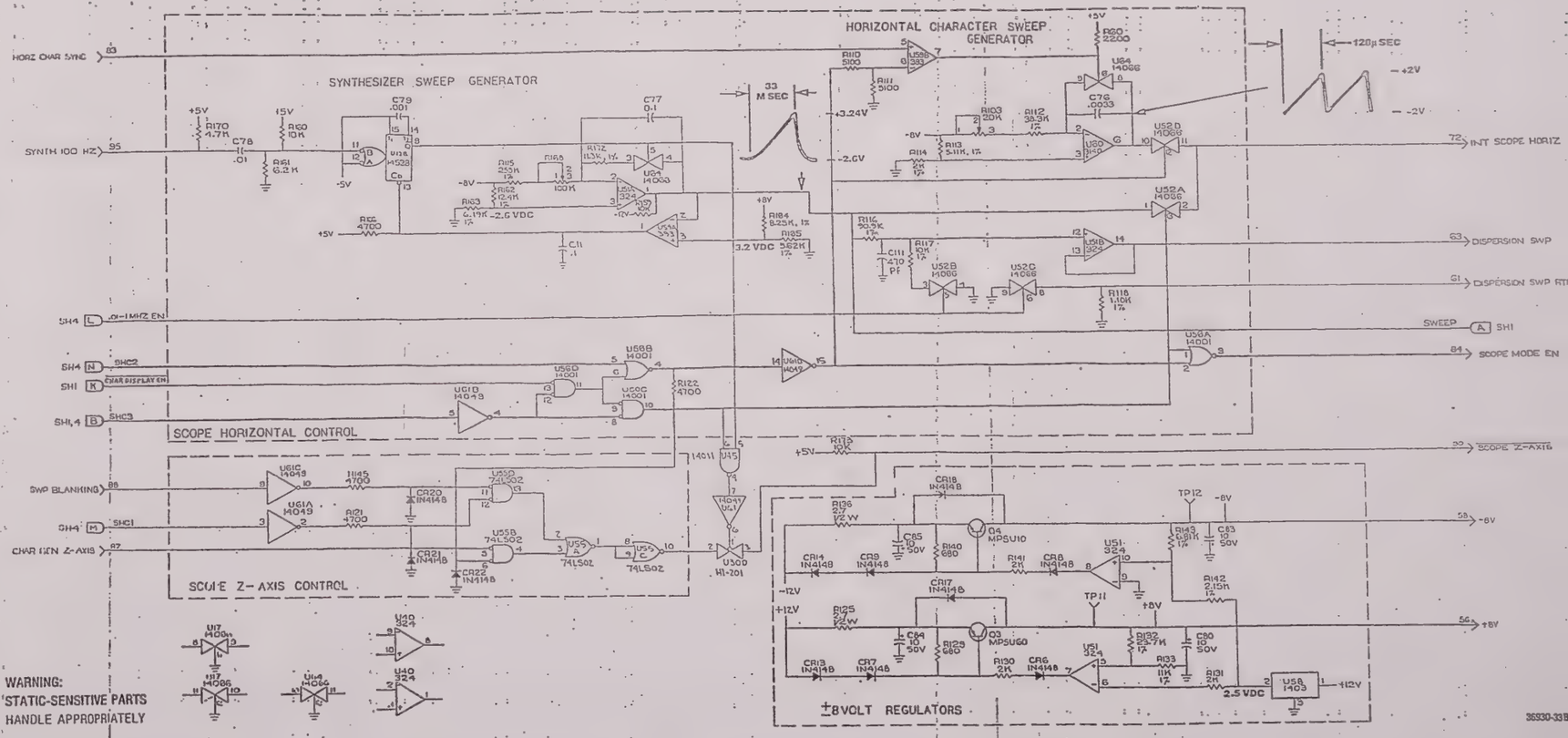

SCOPE/DVM CONTROL BOARD (A7)

(RTC-1006A)

Figure 9-2a. Schematic (Sheet 1 of 4)

NOTES:

1. PARTIAL REFERENCE DESIGNATIONS ARE SHOWN. FOR COMPLETE DESIGNATIONS PREFIX WITH A7.
2. FOR REFERENCE DRAWINGS REFER TO ASSY NO. 01-P22[illegible].
3. UNLESS OTHERWISE SPECIFIED
   ALL RESISTORS ARE IN OHMS ± 5% PCT, 1/4 WATT.
   ALL CAPACITORS ARE IN UF.
   ALL INDUCTORS ARE IN UH.
   ALL VOLTAGES ARE IN DC.

REF DES	DEVICE	GND	+V PIN	-V PIN	NO CONNECT
U1	HI-201-5	5,14	[illegible]	[illegible]	12
U2					
U3	MLM324		[illegible]	[illegible]	
U4	LM393		[illegible]	[illegible]	
U5	MC14520		[illegible]	[illegible]	9
U6	HI-201-5	5	[illegible]	[illegible]	12
U7	LM386	6		[illegible]	1,7,8
U8					
U9					
U10	LM393		[illegible]	[illegible]	
U11	MC14011		[illegible]	[illegible]	
U12	MC14528		[illegible]	[illegible]	7,10
U13	MC14017		[illegible]	[illegible]	1-7,9,11,12
U17	MC14066	2,3,6	[illegible]	[illegible]	8,9
U19	CA3160	4	[illegible]		1,5,8
U20	HI-201-5	5	[illegible]	[illegible]	12
U21	CA3140		[illegible]	[illegible]	8
U22	CA3240		[illegible]	[illegible]	
U23	CA3240	3	[illegible]	[illegible]	
U24	MC14001		14	7	
U25					
U26	CA3140		[illegible]	[illegible]	8
U27					
U28	DG508	14	[illegible]	[illegible]	
U29	LM308		[illegible]	[illegible]	5
U30	HI-201-5	5,7	[illegible]	[illegible]	12
U34	MC14042	8	[illegible]		3,15,12,10
U37	MC14042		[illegible]	[illegible]	1,2,9,11
U38	MC14555		[illegible]	[illegible]	
U39					
U40	LM324		[illegible]	[illegible]	1,2,3,8,9,10
U41	MC14042		[illegible]	[illegible]	1,10
U42	MC14042		[illegible]	[illegible]	3,9,12,15
U43	LM324		[illegible]	[illegible]	
U44	LM324		[illegible]	[illegible]	
U45	MC14011		[illegible]	[illegible]	
U46	MC14028		[illegible]	[illegible]	4,5,9
U47	MC14042		[illegible]	[illegible]	9,12,15
U48	MC14042		[illegible]	[illegible]	3,9,12,15
U49	MC14042		[illegible]	[illegible]	3,9,12,15
U50	MC14001		[illegible]	[illegible]	
U51	LM324	9	[illegible]	[illegible]	
U52	MC14066	9,4	[illegible]	[illegible]	
U53					
U54	LM393		[illegible]	[illegible]	
U55	74LS02	7	[illegible]		
U56	MC14001		[illegible]	[illegible]	
U57					
U58	MC1403	3	[illegible]		4,5,6,7,8
U59	LM393		[illegible]	[illegible]	
U60	CA3140		[illegible]	[illegible]	1,5,8
U61	MC14049		[illegible]	[illegible]	6,13,16
U62	CA3240		[illegible]	[illegible]	
U63	CA3240		[illegible]	[illegible]	
U64	MC14066	12	[illegible]	[illegible]	10,11
U65	MC1415	3	[illegible]		

WARNING:
STATIC-SENSITIVE PARTS
HANDLE APPROPRIATELY

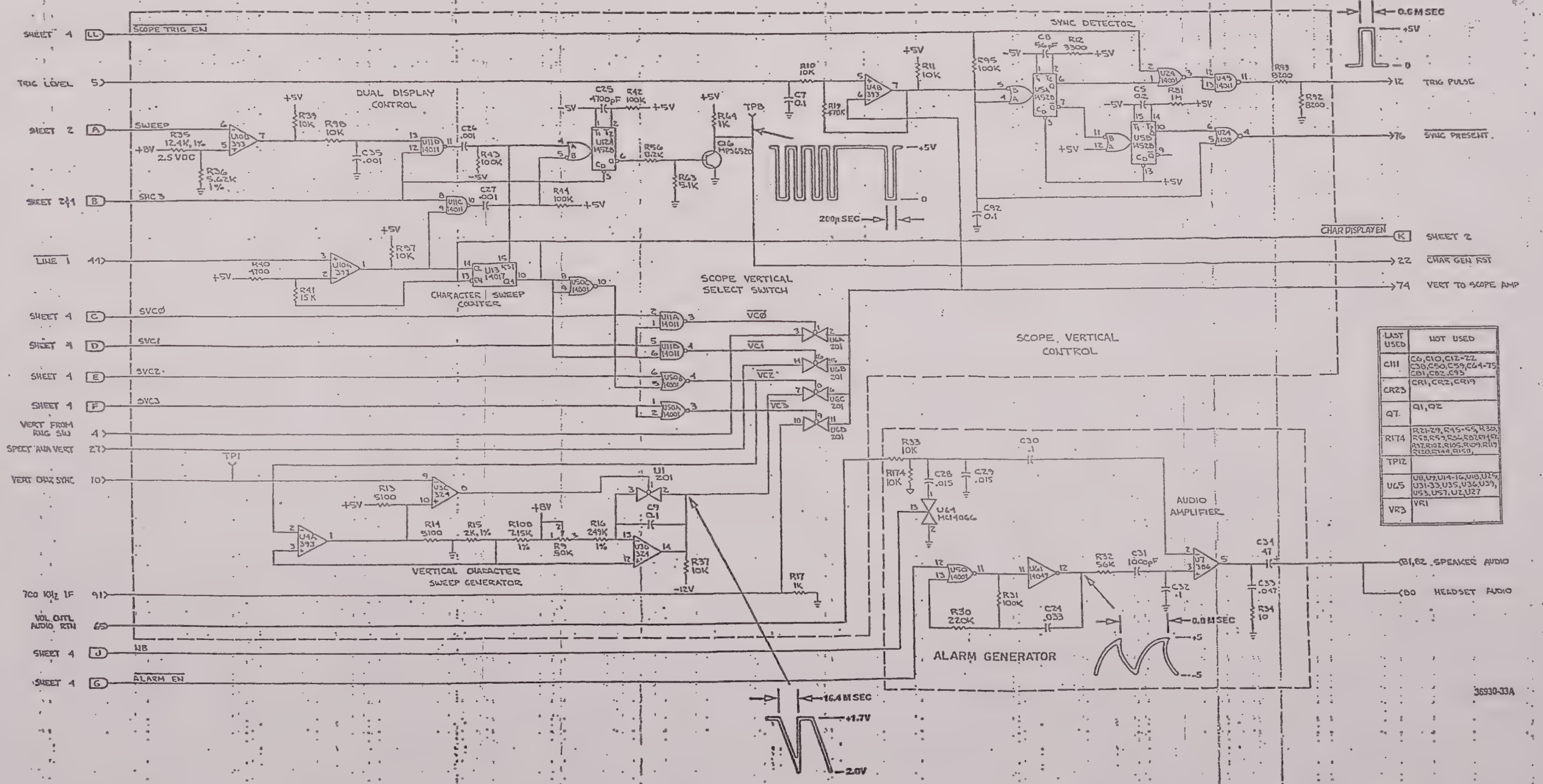

LAST USED	NOT USED
C111	C6,C10,C12-22, C38,C50,C59,C64-75, C81,C82,C93
CR23	CR1,CR2,CR19
Q7	Q1,Q2
R174	R21-29,R45-55,R39,R53,R57,R56,R82,R94,R97,R102,R105,R109,R113,R120,R144,R158,
TP12	
U65	U8,U9,U14-16,U18,U25,U31-33,U35,U36,U39,U53,U57,U2,U27
VR3	VR1

Figure 9-2d. Schematic (Sheet 4 of 4)

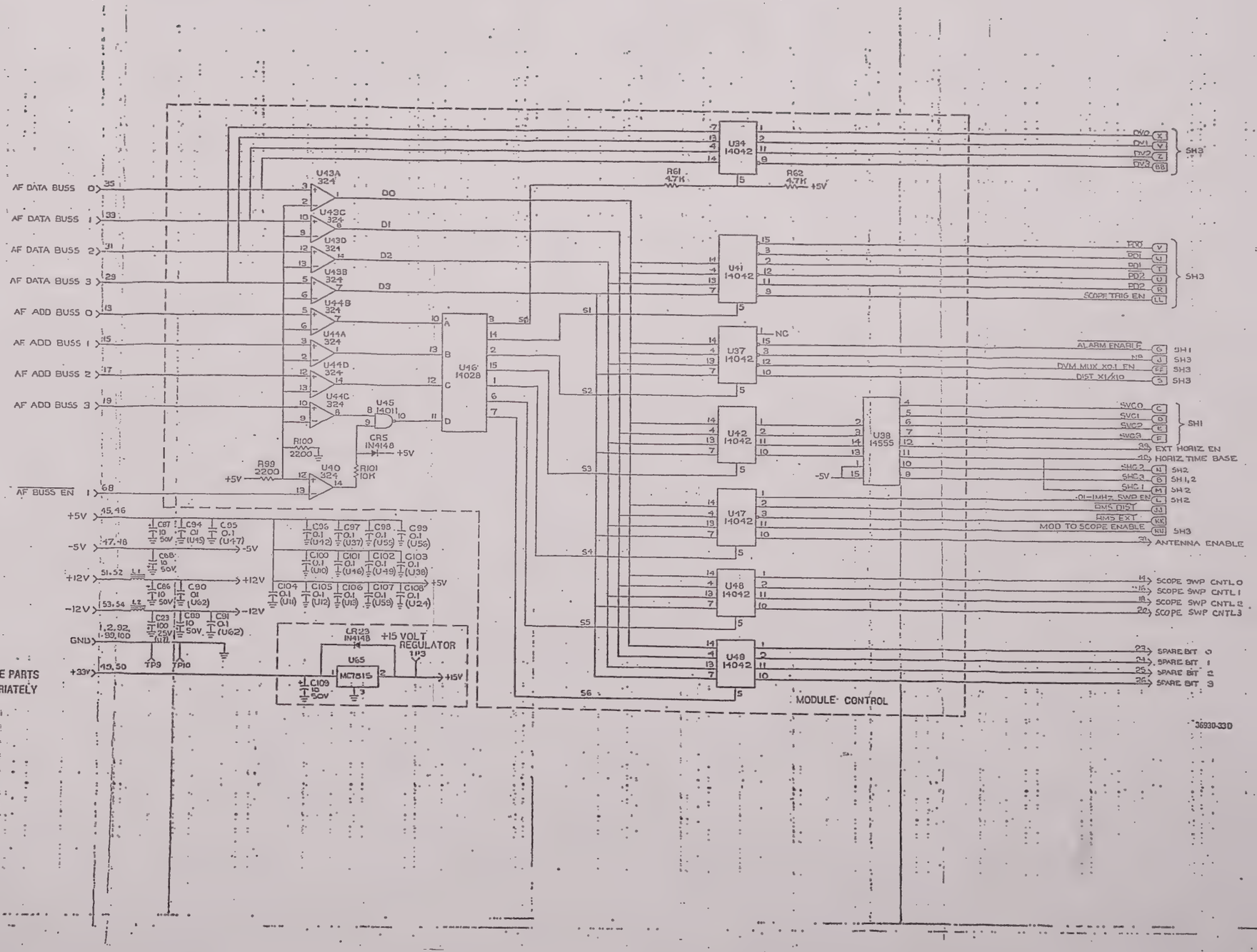

WARNING:
STATIC-SENSITIVE PARTS
HANDLE APPROPRIATELY

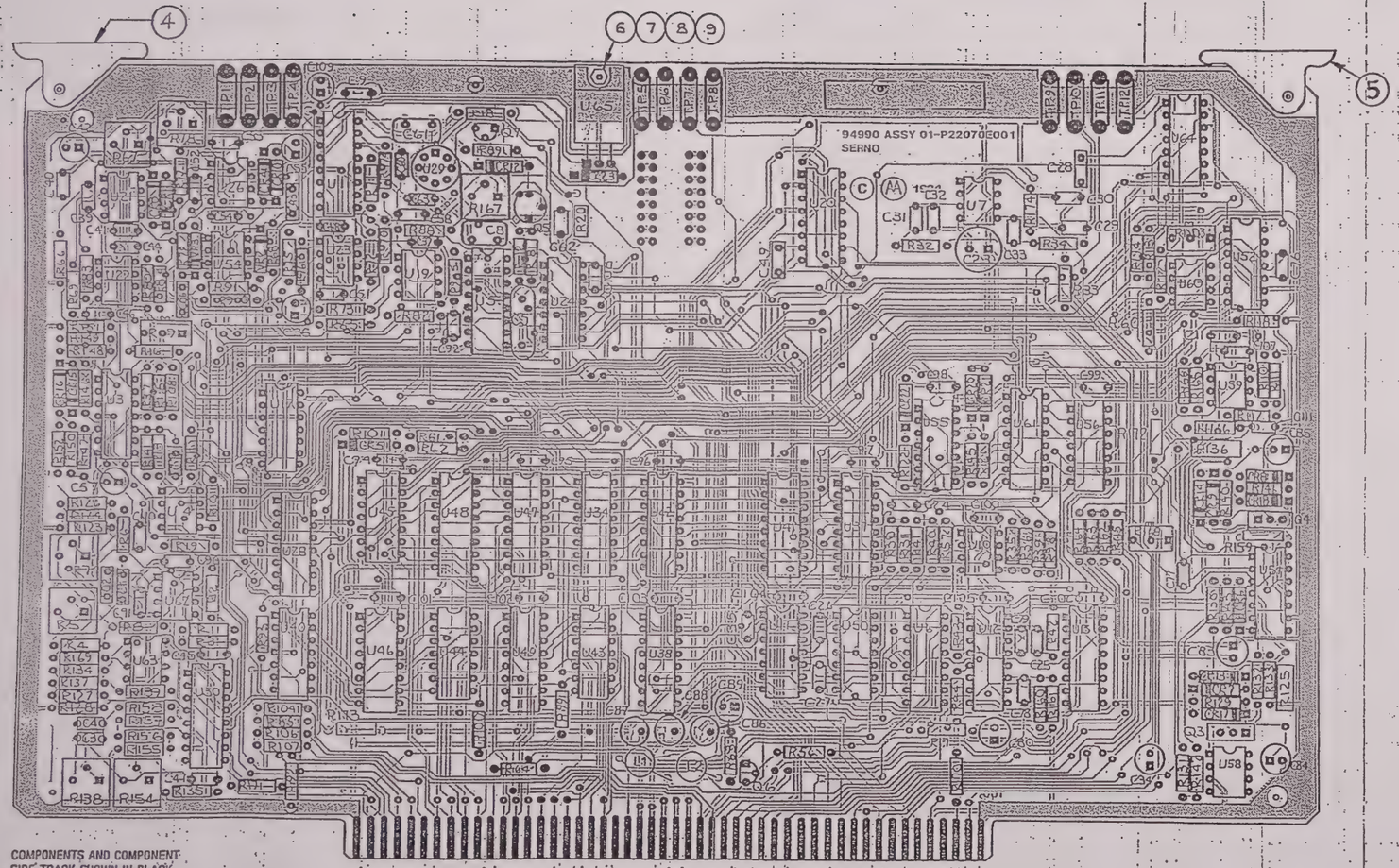

COMPONENTS AND COMPONENT SIDE TRACK SHOWN IN BLACK. SOLDER-SIDE TRACK SHOWN IN ORANGE.

SCOPE/DVM CONTROL BOARD (A7)
RTC-1006A

Find No.	Qty. Req.	Part No.	Nomenclature	Part Value
004	1	45-80339B28	CARD EJECTOR	
005	1	45-80339B40	CARD EJECTOR	MARKED
006	1	03-133599	SCREW	.112-40X.312
007	1	04-140358	WASHER	.112
008	1	04-5777	WASHER, LOCK	.112
009	1	02-140125	NUT, LIGHT HEX	.112-40
C001	1	21-80342B32	CAPACITOR	.01UF-5-50
C002	1	21-80342B32	CAPACITOR	.01UF-5-50
C003	1	21-80342B32	CAPACITOR	.01UF-5-50
C004	1	21-80342B32	CAPACITOR	.01UF-5-50
C005	1	21-82372C05	CAPACITOR	.2UF-+80-20-25
C007	1	21-80342B10	CAPACITOR	.1UF-20-50
C008	1	21-80339B17	CAPACITOR	56PF-5-500
C009	1	21-80341B95	CAPACITOR	.1UF-10-100
C011	1	21-80341B96	CAPACITOR	.1UF-10-100
C023	1	23-84665F03	CAPACITOR	100UF-20-25
C024	1	21-80342B02	CAPACITOR	.033UF-10-100
C025	1	21-80342B05	CAPACITOR	.4700PF-10-100
C026	1	21-80341B92	CAPACITOR	1000PF-10-100
C027	1	21-80341B92	CAPACITOR	1000PF-10-100
C028	1	21-80342B04	CAPACITOR	.015UF-10-100
C029	1	21-80342B04	CAPACITOR	.015UF-10-100
C030	1	21-80342B10	CAPACITOR	.1UF-20-50
C031	1	21-80341B92	CAPACITOR	1000PF-10-100
C032	1	21-80341B96	CAPACITOR	.1UF-10-100
C033	1	21-80342B13	CAPACITOR	.047UF-20-50
C034	1	23-84665F25	CAPACITOR	47UF-20-10
C035	1	21-80341B92	CAPACITOR	1000PF-10-100
C036	1	23-83441B15	CAPACITOR	1UF-20-35
C037	1	21-80342B10	CAPACITOR	.1UF-20-50
C039	1	21-80342B10	CAPACITOR	.1UF-20-50
C040	1	21-80342B10	CAPACITOR	.1UF-20-50
C041	1	21-80342B10	CAPACITOR	.1UF-20-50
C042	1	23-80341B15	CAPACITOR	10UF-20-50
C043	1	21-80342B45	CAPACITOR	.47UF-10-50
C044	1	21-80342B10	CAPACITOR	.1UF-20-50
C045	1	21-80342B09	CAPACITOR	.01UF-20-50
C046	1	21-80342B10	CAPACITOR	.1UF-20-50
C047	1	21-80342B10	CAPACITOR	.1UF-20-50
C048	1	21-80342B10	CAPACITOR	.1UF-20-50
C049	1	21-80342B46	CAPACITOR	1UF-20-50
C051	1	21-80342B10	CAPACITOR	.1UF-20-50
C052	1	21-80342B10	CAPACITOR	.1UF-20-50
C053	1	21-80342B10	CAPACITOR	.1UF-20-50
C054	1	21-80342B10	CAPACITOR	.1UF-20-50
C055	1	23-80341B15	CAPACITOR	10UF-20-50
C056	1	21-80342B45	CAPACITOR	.47UF-10-50
C057	1	23-80341B15	CAPACITOR	10UF-20-50
C058	1	21-80341B94	CAPACITOR	.01UF-10-100
C060	1	21-80341B56	CAPACITOR	1500PF-10-50
C061	1	21-80339B15	CAPACITOR	39PF-5-500
C062	1	21-80342B10	CAPACITOR	.1UF-20-50
C063	1	21-80342B10	CAPACITOR	.1UF-20-50
C076	1	21-80341B71	CAPACITOR	3300PF-5-50
C077	1	08-80343B12	CAPACITOR	.1UF-10-100
C078	1	21-80342B09	CAPACITOR	.01UF-20-50
C079	1	21-80341B46	CAPACITOR	1000PF-5-50
C080	1	23-80341B15	CAPACITOR	10UF-20-50
C083	1	23-80341B15	CAPACITOR	10UF-20-50
C084	1	23-80341B15	CAPACITOR	10UF-20-50
C085	1	23-80341B15	CAPACITOR	10UF-20-50
C086	1	23-80341B15	CAPACITOR	10UF-20-50
C087	1	23-80341B15	CAPACITOR	10UF-20-50
C088	1	23-80341B15	CAPACITOR	10UF-20-50
C089	1	23-80341B15	CAPACITOR	10UF-20-50
C090	1	21-80342B10	CAPACITOR	.1UF-20-50
C091	1	21-80342B10	CAPACITOR	.1UF-20-50
C092	1	21-80342B10	CAPACITOR	.1UF-20-50
C094	1	21-80342B10	CAPACITOR	.1UF-20-50
C095	1	21-80342B10	CAPACITOR	.1UF-20-50
C096	1	21-80342B10	CAPACITOR	.1UF-20-50
C097	1	21-80342B10	CAPACITOR	.1UF-20-50
C098	1	21-80342B10	CAPACITOR	.1UF-20-50
C099	1	21-80342B10	CAPACITOR	.1UF-20-50
C100	1	21-80342B10	CAPACITOR	.1UF-20-50
C101	1	21-80342B10	CAPACITOR	.1UF-20-50
C102	1	21-80342B10	CAPACITOR	.1UF-20-50
C103	1	21-80342B10	CAPACITOR	.1UF-20-50
C104	1	21-80342B10	CAPACITOR	.1UF-20-50
C105	1	21-80342B10	CAPACITOR	.1UF-20-50
C106	1	21-80342B10	CAPACITOR	.1UF-20-50
C107	1	21-80342B10	CAPACITOR	.1UF-20-50
C108	1	21-80342B10	CAPACITOR	.1UF-20-50

Figure 9-3. Printed Wiring Board Assembly and Parts List

SCOPE/DVM CONTROL BOARD (A7) (Cont)
RTC-1006A

Find No.	Qty. Req.	Part No.	Nomenclature	Part Value
C109	1	23-80341B15	CAPACITOR	10UF-20-50
C110	1	21-80342B11	CAPACITORQ	.22UF-20-50
C111	1	21-80341B62	CAPACITOR	470PF-5-50
CR003	1	48-84463K02	DIODE	
CR004	1	48-84463K02	DIODE	
CR005	1	48-84463K02	DIODE	
CR006	1	48-84463K02	DIODE	
CR007	1	48-84463K02	DIODE	
CR008	1	48-84463K02	DIODE	
CR009	1	48-84463K02	DIODE	
CR010	1	48-84463K02	DIODE	
CR011	1	48-84463K02	DIODE	
CR012	1	48-84463K02	DIODE	
CR013	1	48-84463K02	DIODE	
CR014	1	48-84463K02	DIODE	
CR015	1	48-84463K02	DIODE	
CR016	1	48-84463K02	DIODE	
CR017	1	48-84463K02	DIODE	
CR018	1	48-84463K02	DIODE	
CR020	1	48-84463K02	DIODE	
CR021	1	48-84463K02	DIODE	
CR022	1	48-84463K02	DIODE	
CR023	1	48-84463K02	DIODE	
L001	1	25-80342B79	COIL,TOROID	
L002	1	25-80342B79	COIL,TOROID	
Q003	1	48-80341A48	TRANSISTOR	MPS-U60 SCREENED
Q004	1	48-80341A47	TRANSISTOR	MPS-U10 SCREENED
Q005	1	48-80343B21	TRANSISTOR	2N4391 SCREENED
Q006	1	48-80340B86	TRANSISTOR	MPS6520
Q007	1	48-80340B85	TRANSISTOR	MPS6519
R001	1	05-11009C56	RESISTOR	2K-S-1/4
R002	1	05-11009C74	RESISTOR	11K-S-1/4
R003	1	05-11009C89	RESISTOR	120K-S-1/4
R004	1	05-80396A63	RESISTOR	15.2K-1-1/8
R005	1	18-83452F02	RESISTOR,VARIABLE	2K
R006	1	05-80396A63	RESISTOR	15.2K-1-1/8
R007	1	18-83452F02	RESISTOR,VARIABLE	2K
R008	1	05-80396A64	RESISTOR	20K-1-1/8
R009	1	18-83452F17	RESISTOR,VARIABLE	50K
R010	1	05-11009C73	RESISTOR	10K-S-1/4
R011	1	05-11009C73	RESISTOR	10K-S-1/4
R012	1	05-11009C61	RESISTOR	3.3K-S-1/4
R013	1	05-11009C66	RESISTOR	5.1K-S-1/4
R014	1	05-11009C66	RESISTOR	5.1K-S-1/4
R015	1	05-10621C24	RESISTOR	2K-1-1/4
R016	1	05-10621E27	RESISTOR	249K-1-1/4
R017	1	05-11009C49	RESISTOR	1K-S-1/4
R018	1	05-11009C73	RESISTOR	10K-S-1/4
R019	1	5043CX470K0J	RESISTOR	470K-S-1/4
R020	1	05-11009C73	RESISTOR	10K-S-1/4
R030	1	05-11009D06	RESISTOR	220K-S-1/4
R031	1	05-11009C97	RESISTOR	100K-S-1/4
R032	1	05-11009C91	RESISTOR	56K-S-1/4
R033	1	05-11009C73	RESISTOR	10K-S-1/4
R034	1	05-11009C01	RESISTOR	10-S-1/4
R035	1	05-10621D01	RESISTOR	12.4K-1-1/4
R036	1	05-10621C67	RESISTOR	5.62K-1-1/4
R037	1	05-11009C73	RESISTOR	10K-S-1/4
R039	1	05-121009C73	RESISTOR	10K-S-1/4
R040	1	05-11009C65	RESISTOR	4.7K-S-1/4
R041	1	05-11009C77	RESISTOR	15K-S-1/4
R042	1	05-11009C97	RESISTOR	100K-S-1/4
R043	1	05-11009C97	RESISTOR	100K-S-1/4
R044	1	05-11009C97	RESISTOR	100K-S-1/4
R055	1	05-11009C71	RESISTOR	8.2K-S-1/4
R057	1	05-11009C73	RESISTOR	10K-S-1/4
R060	1	05-11009C57	RESISTOR	2.2K-S-1/4
R061	1	05-11009C65	RESISTOR	4.7K-S-1/4
R062	1	05-11009C65	RESISTOR	4.7K-S-1/4
R063	1	05-11009C66	RESISTOR	5.1K-S-1/4
R064	1	05-11009C49	RESISTOR	1K-S-1/4
R065	1	05-11009C86	RESISTOR	36K-S-1/4
R066	1	05-11009D22	RESISTOR	1M-S-1/4
R067	1	18-83452F14	RESISTOR,VARIABLE	10K
R068	1	05-11009D22	RESISTOR	1M-S-1/4
R069	1	05-11009D22	RESISTOR	1M-S-1/4
R070	1	05-10621D88	RESISTOR	100K-1-1/4
R071	1	05-10621D88	RESISTOR	100K-1-1/4
R072	1	05-10621D88	RESISTOR	100K-1-1/4
R073	1	05-10621E47	RESISTOR	402K-1-1/4
R074	1	05-10621D33	RESISTOR	26.7K-1-1/4
R075	1	05-80396A58	RESISTOR	100K-0.5-1/8
R076	1	05-80396A58	RESISTOR	100K-0.5-1/8
R077	1	05-11009D22	RESISTOR	1M-S-1/4
R078	1	18-83452F14	RESISTOR,VARIABLE	10K

Find No.	Qty. Req.	Part No.	Nomenclature	Part Value
R079	1	05-11009D22	RESISTOR	1M-S-1/4
R080	1	05-11009D22	RESISTOR	1M-S-1/4
R081	1	05-11009D22	RESISTORQ	1M-S-1/4
R082	1	05-10621D88	RESISTOR	100K-1-1/4
R083	1	05-11009C80	RESISTOR	20K-S-1/4
R084	1	05-11009C80	RESISTOR	20K-S-1/4
R085	1	05-10621D92	RESISTOR	110K-1-1/4
R088	1	05-10621C91	RESISTOR	10K-1-1/4
R089	1	05-11009C97	RESISTOR	100K-S-1/4
R090	1	05-11009C39	RESISTORS	390-S-1/4
R091	1	05-11009C39	RESISTORS	390-S-1/4
R092	1	05-11009C71	RESISTOR	8.2K-S-1/4
R093	1	05-11009C71	RESISTOR	8.2K-S-1/4
R095	1	05-11009C97	RESISTOR	100K-S-1/4
R096	1	05-11009C73	RESISTOR	10K-S-1/4
R097	1	05-11009C57	RESISTOR	2.2K-S-1/4
R098	1	05-11009C57	RESISTOR	2.2K-S-1/4
R099	1	05-11009C57	RESISTOR	10K-S-1/4
R101	1	05-11009C73	RESISTOR	20K
R102	1	18-83452F15	RESISTOR,VARIABLE	1M-1-1/4
R104	1	05-10621E85	RESISTOR	13K-1-1/4
R105	1	05-10621D03	RESISTOR	13K-1-1/4
R107	1	05-10621D03	RESISTOR	7.15K-1-1/4
R108	1	05-10621C77	RESISTOR	5.1K-S-1/4
R110	1	05-11009C66	RESISTOR	5.1K-S-1/4
R111	1	05-11009C66	RESISTOR	38.3K-1-1/4
R112	1	05-10621D18	RESISTOR	5.11K-1-1/4
R113	1	05-10621C63	RESISTOR	2K-1-1/4
R114	1	05-10621C24	RESISTOR	255K-1-1/4
R115	1	05-10621E28	RESISTOR	90.9K-1-1/4
R116	1	05-10621D84	RESISTOR	10K-1-1/4
R117	1	05-10621C91	RESISTOR	1.1K-1-1/4
R118	1	05-10621B98	RESISTOR	4.7K-S-1/4
R121	1	05-11009C65	RESISTOR	4.7K-S-1/4
R122	1	05-11009C65	RESISTOR	221K-1-1/8
R123	1	05-80396A65	RESISTOR	10.4K-1-1/8
R124	1	05-80396A61	RESISTOR	2.7-S-1/2
R125	1	05-80037G11	RESISTOR	75-1-1/4
R126	1	05-10621A65	RESISTOR	9.76K-1-1/8
R127	1	05-80396A72	RESISTOR	511K-1-1/8
R128	1	05-80396A68	RESISTOR	680-S-1/4
R129	1	05-11009C45	RESISTOR	2K-S-1/4
R130	1	05-11009C56	RESISTOR	2K-S-1/4
R131	1	05-11009C56	RESISTOR	23.7K-1-1/4
R132	1	05-10621D28	RESISTOR	11K-1-1/4
R133	1	05-10621C95	RESISTOR	107K-1-1/8
R134	1	05-80396A62	RESISTOR	27K-S-1/4
R135	1	05-11009C83	RESISTOR	2.7-S-1/2
R136	1	05-80037G11	RESISTOR	15.2K-1-1/8
R137	1	05-80396A63	RESISTOR	20K
R138	1	18-83452F02	RESISTOR,VARIABLE	20K-1-1/8
R139	1	05-80396A64	RESISTOR	680-S-1/4
R140	1	05-11009C45	RESISTOR	2K-S-1/4
R141	1	05-11009C56	RESISTOR	2.15K-1-1/4
R142	1	05-10621C27	RESISTOR	6.81K-1-1/4
R143	1	05-10621C75	RESISTOR	4.7K-S-1/4
R145	1	05-11009C65	RESISTOR	20K-1-1/4
R146	1	05-10621D21	RESISTOR	22.1K-1-1/4
R147	1	05-10621D25	RESISTOR	20K1-1-1/4
R148	1	05-10621D21	RESISTOR	20K-1-1/4
R149	1	05-10621D21	RESISTOR	10K-1-1/4
R150	1	05-10621C91	RESISTOR	10K-S-1/4
R151	1	05-11009C73	RESISTOR	10K-S-1/4
R152	1	05-11009C73	RESISTOR	15.2K-1-1/8
R153	1	05-80396A63	RESISTOR	2K
R154	1	18-83452F02	RESISTOR,VARIABLE	221K-1-1/8
R155	1	05-80396A65	RESISTOR	10.4K-1-1/8
R156	1	05-80396A61	RESISTOR	75-1-1/4
R157	1	05-10621A85	RESISTOR	10K-S-1/8
R159	1	05-185A73	RESISTOR	10K-S-1/4
R160	1	05-11009C73	RESISTOR	6.2K-S-1/4
R161	1	05-11009C68	RESISTOR	12.4K-1-1/4
R162	1	05-10621D01	RESISTOR	6.19K-1-1/4
R163	1	05-10621C71	RESISTOR	8.25K-1-1/4
R164	1	05-10621C83	RESISTOR	5.62K-1-1/4
R165	1	05-10621C67	RESISTOR	4.7K-S-1/4
R166	1	05-11009C65	RESISTOR	2K
R167	1	18-83452F02	RESISTOR,VARIABLE	100K
R168	1	18-83452F19	RESISTOR,VARIABLE	2.7K-S-1/4
R169	1	05-11009C59	RESISTOR	4.7K-S-1/4
R170	1	05-11009C65	RESISTOR	10K-S-1/4
R171	1	05-11009C73	RESISTOR	11.3K-1-1/4
R172	1	05-10621C96	RESISTOR	10K-S-1/4
R173	1	05-11009C73	RESISTOR	10K-S-1/4
R174	1	05-11009C73	RESISTOR	WHITE
TP001	1	09-80331A88	JACK	

Find No.	Qty. Req.	Part No.	Nomenclature	Part Value
TP002	1	09-80331A88	JACK	WHITE
TP003	1	09-80331A88	JACK	WHITE
TP004	1	09-80331A88	JACK	WHITE
TP005	1	09-80331A88	JACK	WHITE
TP006	1	09-80331A88	JACK	WHITE
TP007	1	09-80331A88	JACK	WHITE
TP008	1	09-80331A88	JACK	WHITE
TP009	1	90-80331A88	JACK	WHITE
TP010	1	09-80331A88	JACK	WHITE
TP011	1	09-80331A88	JACK	WHITE
TP012	1	09-803311A88	JACK	WHITE
U001	1	51-80345A05	INTEGRATED CIRCUIT	HI-201-5 SCREENED
U003	1	51-80396A16	INTEGRATED CIRCUIT	LM324N SCREENED
U004	1	51-80345A10	INTEGRATED CIRCUIT	LM393N SCREENED
U005	1	51-82884L28	INTEGRATED CIRCUIT	
U006	1	51-80345A05	INTEGRATED CIRCUIT	HI-201-5 SCREENED
U007	1	51-80345A09	AUDIO AMP	LM386N-1 SCREENED
U010	1	51-80345A10	INTEGRATED CIRCUIT	LM393N SCREENED
U011	1	51-05596E46	INTEGRATED CIRCUIT	
U012	1	51-82884L28	INTEGRATED CIRCUIT	
U013	1	51-82884L35	INTEGRATED CIRCUIT	
U017	1	51-82884L71	INTEGRATED CIRCUIT	
U019	1	51-80345A02	INTEGRATED CIRCUIT	CA3160E SCREENED
U020	1	51-80345A05	INTEGRATED CIRCUIT	HI-201-5 SCREENED
U021	1	51-80345A01	INTEGRATED CIRCUIT	CA3140E SCREENED
U022	1	51-80345A04	INTEGRATED CIRCUIT	CA3240E SCREENED
U023	1	51-80345A04	INTEGRATED CIRCUIT	CA3240E SCREENED
U024	1	51-05126M33	INTEGRATED CIRCUIT	
U026	1	51-80345A01	INTEGRATED CIRCUIT	CA3140E SCREENED
U028	1	51-80396A13	INTEGRATED CIRCUIT	DG508CJ SCREENED
U029	1	51-80340B02	INTEGRATED CIRCUIT	
U030	1	51-80345A05	INTEGRATED CIRCUIT	HI-201-5 SCREENED
U034	1	51-82884L15	INTEGRATED CIRCUIT	
U037	1	51-82994L15	INTEGRATED CIRCUIT	
U038	1	51-80252001	INTEGRATED CIRCUIT	
U040	1	51-80396A16	INTEGRATED CIRCUIT	LM324N SCREENED
U041	1	51-82884L15	INTEGRATED CIRCUIT	
U042	1	51-82884L15	INTEGRATED CIRCUIT	
U043	1	51-80396A16	INTEGRATED CIRCUIT	LM324N SCREENED
U044	1	51-80396A16	INTEGRATED CIRCUIT	LM324N SCREENED
U045	1	51-05596E46	INTEGRATED CIRCUIT	
U046	1	51-82884L09	INTEGRATED CIRCUIT	
U047	1	51-82884L15	INTEGRATED CIRCUIT	
U048	1	51-82884L15	INTEGRATED CIRCUIT	
U049	1	51-82884L15	INTEGRATED CIRCUIT	
U050	1	51-05126M33	INTEGRATED CIRCUIT	
U051	1	51-80396A16	INTEGRATED CIRCUIT	LM324N SCREENED
U052	1	51-82884L71	INTEGRATED CIRCUIT	
U054	1	51-8345A10	INTEGRATED CIRCUIT	LM393N SCREENED
U055	1	51-84561L05	INTEGRATED CIRCUIT	
U056	1	51-05126M33	INTEGRATED CIRCUIT	
U058	1	51-05469E13	INTEGRATED CIRCUIT	
U059	1	51-80345A10	INTEGRATED CIRCUIT	LM393N SCREENED
U060	1	51-80345A01	INTEGRATED CIRCUIT	CA3140E SCREENED
U061	1	51-82884L02	INTEGRATED CIRCUIT	
U062	1	51-80345A04	INTEGRATED CIRCUIT	CA3240E SCREENED
U063	1	51-80345A04	INTEGRATED CIRCUIT	CA3240E SCREENED
U064	1	51-82884L71	INTEGRATED CIRCUIT	
U065	1	51-83629M28	INTEGRATED CIRCUIT	
VR002	1	48-83461E32	DIODE,ZENER	8.2V-5-.5
VR003	1	48-83461E32	DIODE,ZENER	8.2V-5-.5

9-12

Table 10-1. Functions of Digital Control Bits

Bit No.	Name	Function
0	IF CNT EN	Logic 0 enables IF frequency to IF/BFO Output
1	WB DET EN	Logic 0 enables the Wideband Detector
2	NB FM GAIN X10	Logic 0 increases Audio Gain 20 dB
3	SPARE	—
4	SPARE	—
5	SPKR EN	Logic 0 enables the Speaker Audio
6	$\overline{\text{BIT 12}}$	Soft Inverter
7	DEMOD INV	Logic 1 inverts the Receive Signal −/+
8	WB/NB	Logic 1 selects the Wide IF Bandwidth
9	LPFL 300	Logic 0 selects the 300-Hz LPFL
10	LPFL 3K	Logic 0 selects the 3-kHz LPFL
11	HPFL 3-kHz	Logic 0 select the 3-kHz HPFL
12	HPFL 300-Hz and HPFEN	Logic 0 selects the 300-Hz HPFL and Enables HPFL
13	AM EN	Logic 0 enables the AM Output
14	FM EN	Logic 0 enables the FM Output
15	SSB EN	Logic 0 enables the SSB Output

Table 10-2. Low-Pass Filter—Control-Bit Patterns

Function	Bit Patterns	
	9	10
300-Hz LPF	0	1
3-kHz LPF	1	0
20-Hz LPF	1	1

Table 10-3. High-Pass Filter—Control-Bit Patterns

Function	Bit Patterns		
	6	11	12
5-Hz HPF	0	1	1
300-Hz HPF	1	1	0
3-kHz HPF	1	0	0

Table 10-4. Modulation-Select—Control-Bit Patterns

Function	Bit Patterns						
	0	1	2	8	13	14	15
AM WB	0	1	1	1	0	1	1
AM NB	0	1	1	0	0	1	1
SSB WB	1	1	1	1	1		0
SSB NB	1	1	1	0	1	1	0
FM WB	0	1	1	1	1	0	1
FM NB	0	1	0	0	1	0	1
WB DET EN	1	0	X	X	1	1	1

RECEIVER BOARD (A8)

(RTL-1019A)

Figure 10-1a. Block Diagram (Sheet 1 of 4)

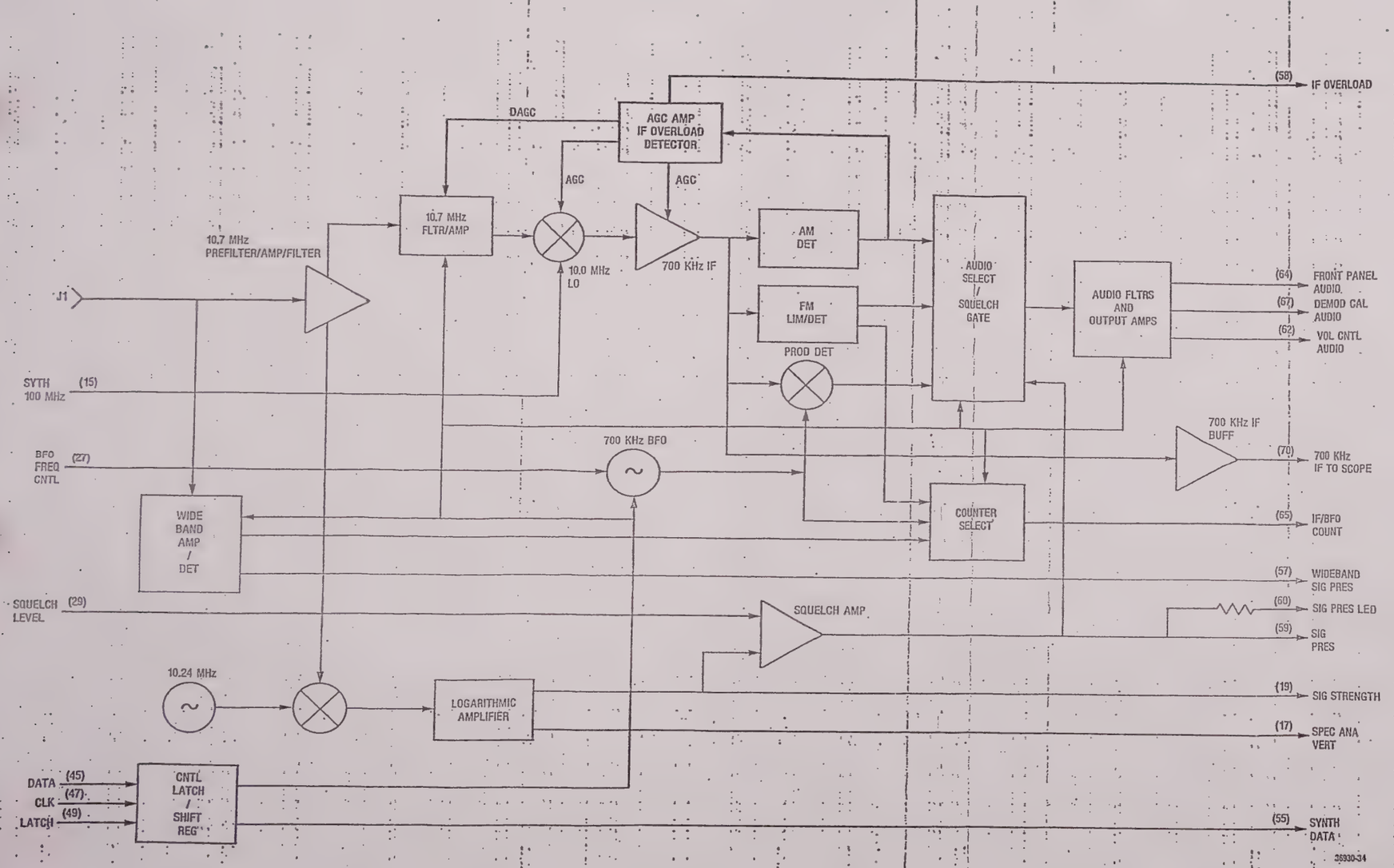

RECEIVER BOARD

LINEAR IF AMPLIFIER

Figure 10-1b. Block Diagram (Sheet 2 of 4)

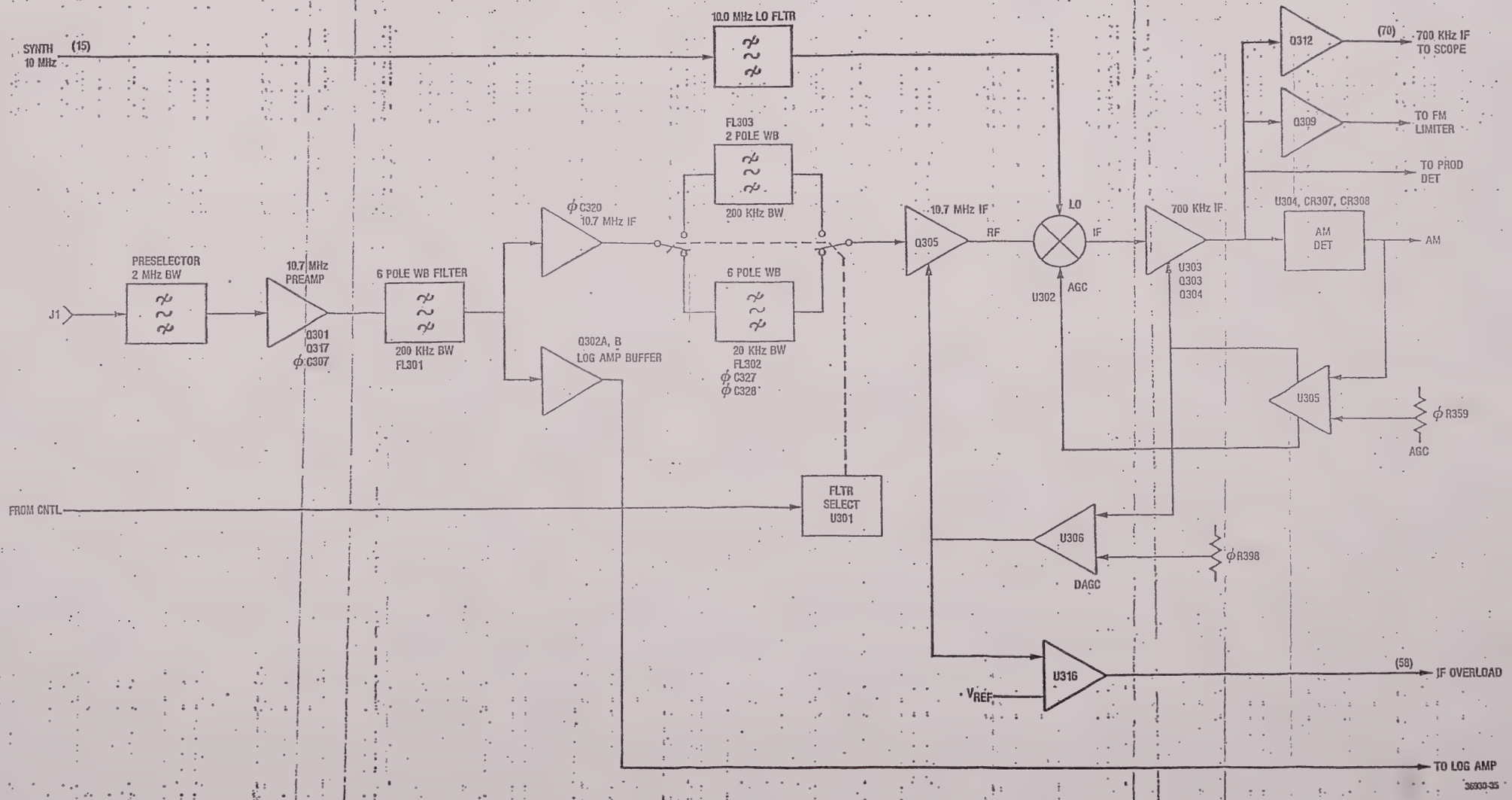

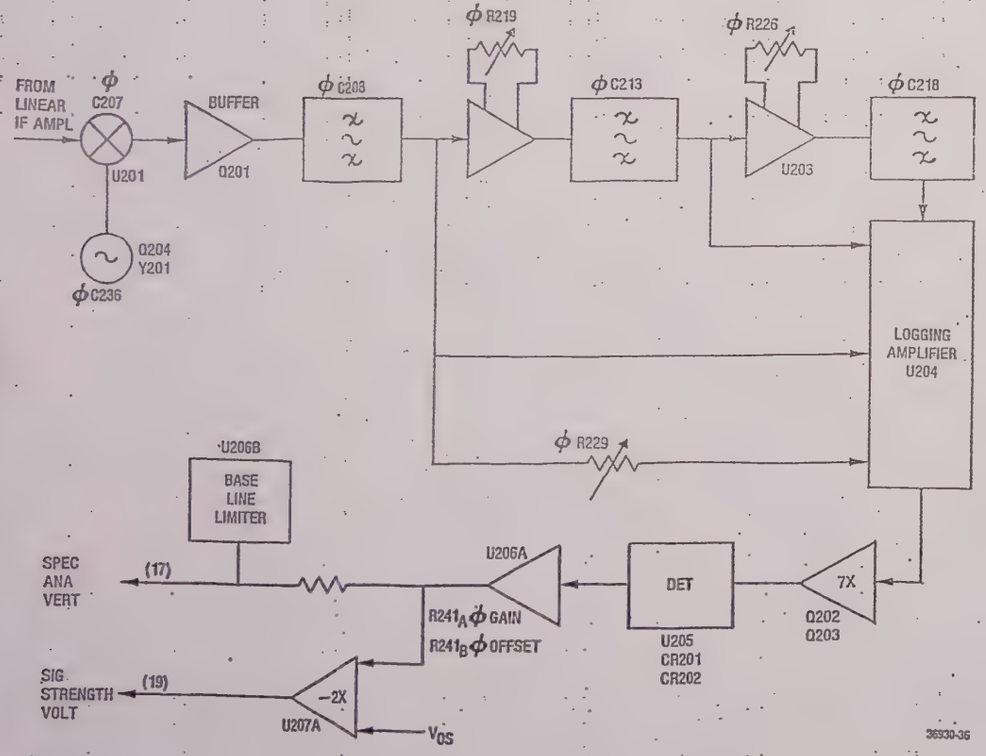

Figure 10-1c. Logarithmic Amplifier — Block Diagram

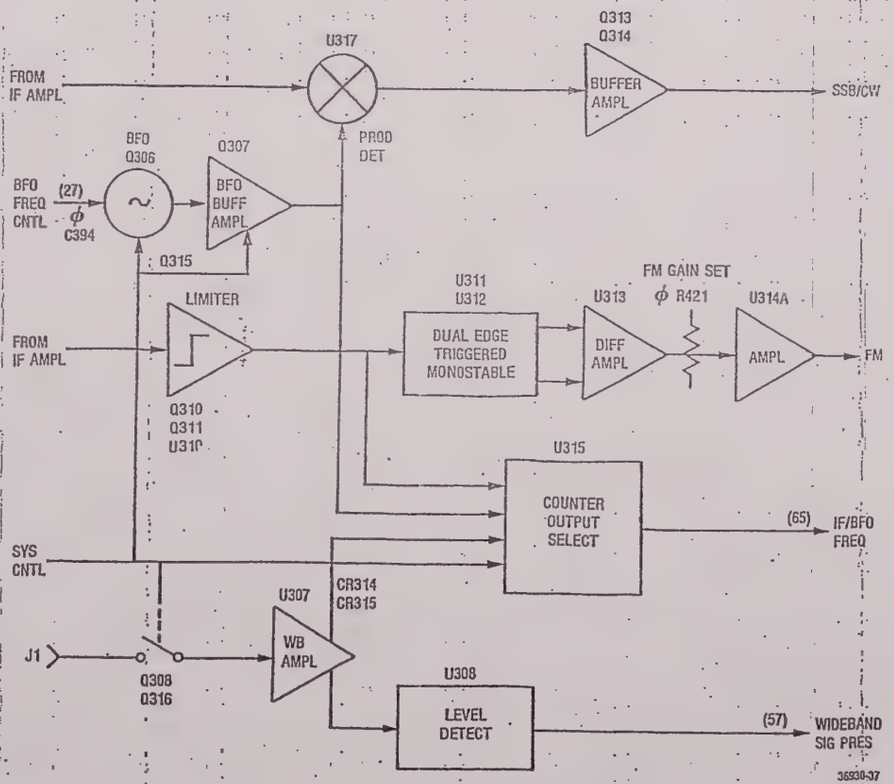

Figure 10-1d. FM/SSB/WB Signal-Present Detectors — Block Diagram

Figure 10-1e. Block Diagram (Sheet 4 of 4)

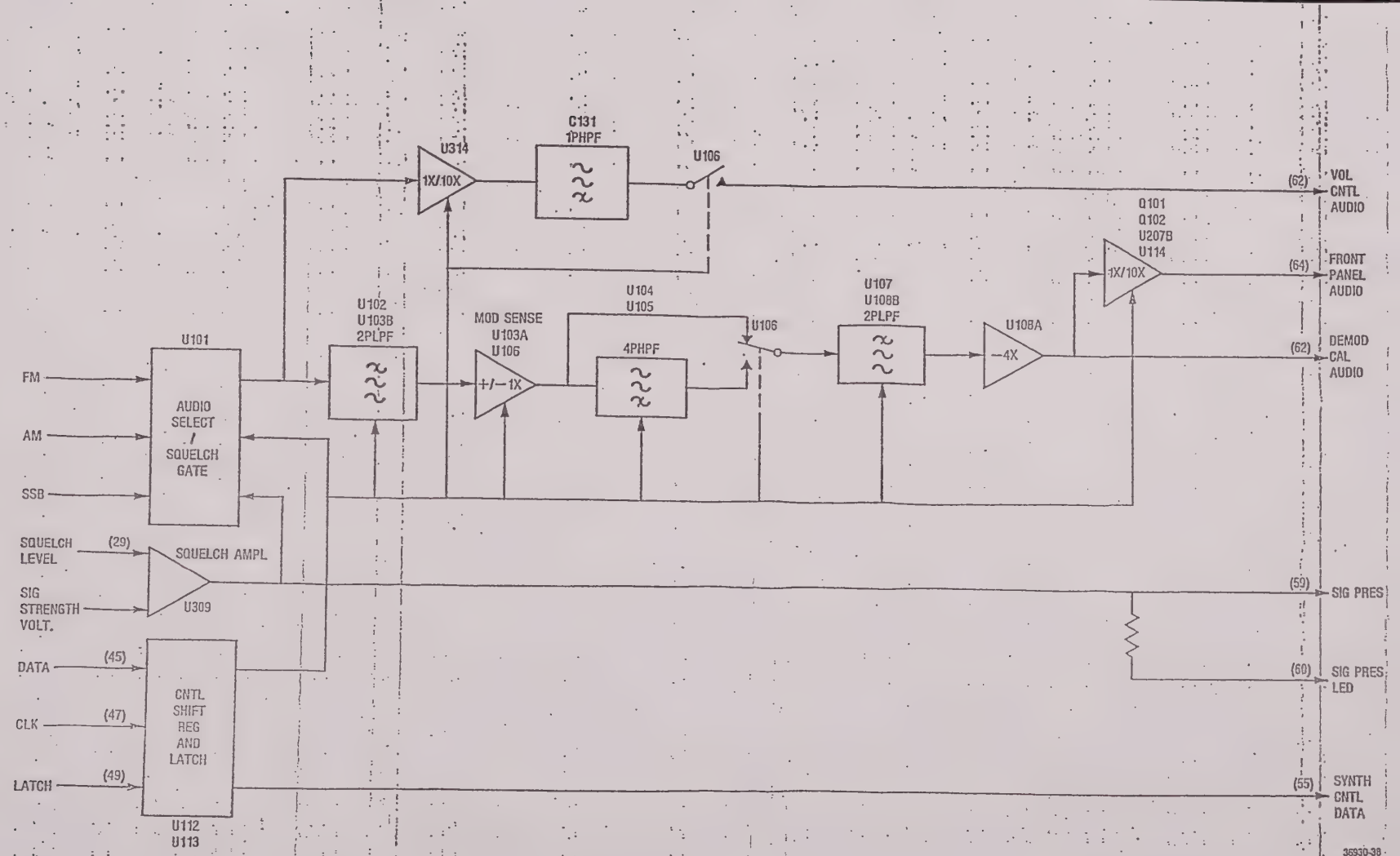

1. UNLESS OTHERWISE SPECIFIED,
   ALL RESISTORS ARE IN OHMS ±5 PCT, 1/4 WATT.
   ALL CAPACITORS ARE IN UF.
   ALL INDUCTORS ARE IN UH.
   ALL VOLTAGES ARE IN DC.
2. FOR REFERENCE DRAWINGS REFER TO: 01-P22081E PWB ASSEMBLY DRAWING
3. PARTIAL REFERENCE DESIGNATIONS ARE SHOWN. FOR COMPLETE DESIGNATIONS PREFIX WITH A8.

⚠1 R204 IS A SELECT IN TEST. NOMINAL VALUE IS 680Ω: SELECT VALUES RANGE FROM 390Ω TO 1.2k Ω AS REQUIRED TO OBTAIN 5V. AT THE COLLECTOR OF Q201 WITH A-40 dBm CW INPUT TO THE RECEIVER (AT 10.7 MHz).

⚠2 C434 IS A SELECT IN TEST. NOMINAL VALUE IS NONE (OMIT PART). OTHER VALUE SHALL BE 270 PF, AS REQUIRED.

⚠3 R435 IS A SELECT IN TEST. NOMINAL VALUE IS SHOWN OTHER VALUE IS 39K Ω. SEE SHEET 4.

7. ALL WAVEFORMS ARE WITH −60 dBm INTO J1 40% AM EXCEPT FM PATH WHICH IS 40 KHz DEV AND SSB WHICH IS CW THE LOG AMP WAVEFORMS ARE −40 dBm CW WIDEBAND RF AND AUDIO MODE

LAST USED	NOT USED
U317 FL304	U109, U116-U200
R451 T103	U208-U300
C434	U110
CR320	CR317, CR318
Q317	
L325	
VR302	
Y201	

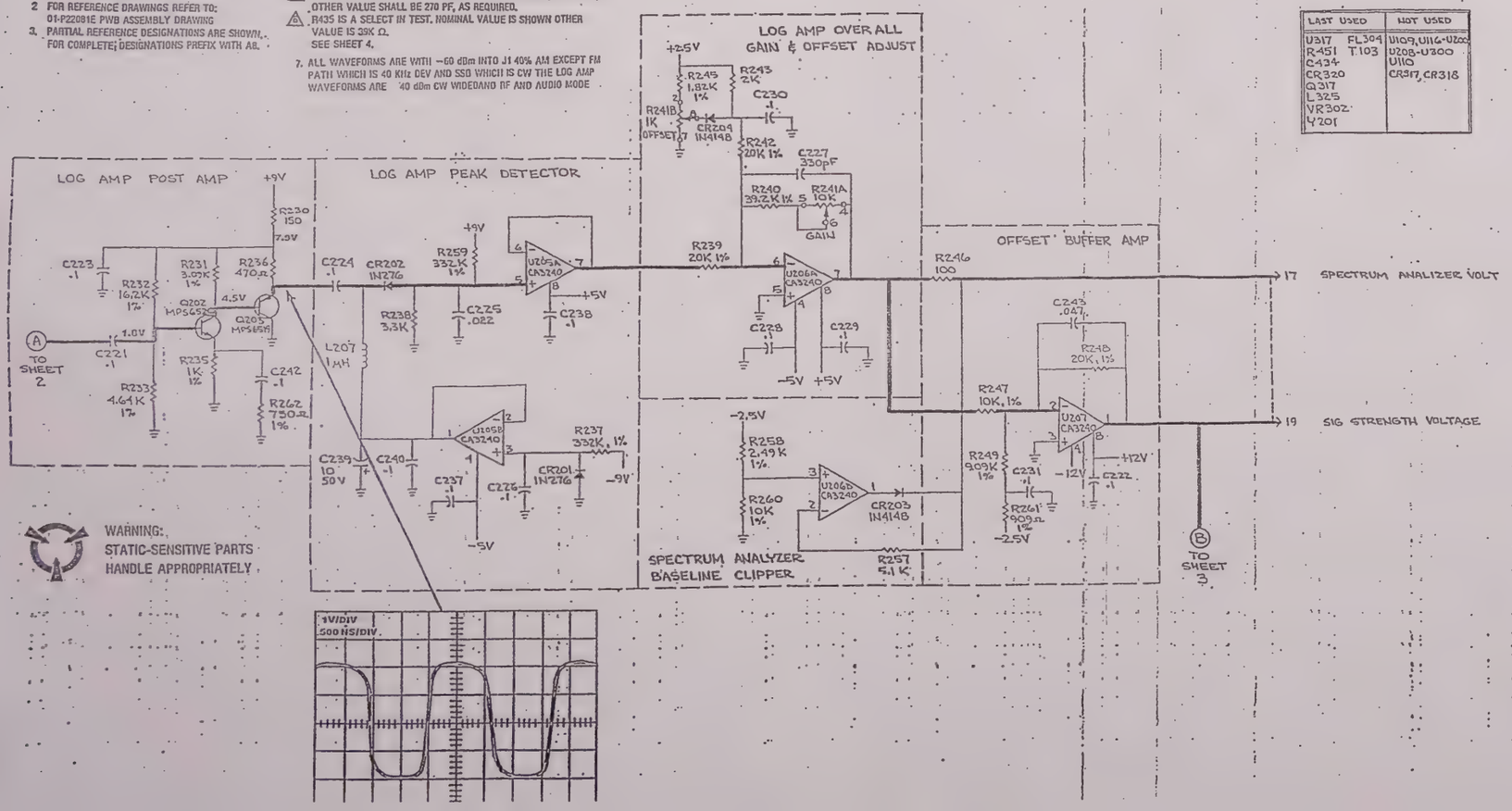

WARNING:
STATIC-SENSITIVE PARTS
HANDLE APPROPRIATELY

DEVICE		+5	GND	NO CONNECT	+12V	-12V	-5V	+5VREF
U101	HI-201		5	12	13	4		
U102	HI-201		5	12	13	4		
U103	LF412ACN				8	4		
U104	HI-201		3,5,14	12	13	4		
U105	CA3240E				8	4		
U106	HI-201		5	12	13	4		
U107	HI-201		5	12	13	4		
U108	LF412ACN				8	4		
U111	LM324		12		4	11		
U112	MC14094	15,16	8	9				
U113	MC14094	15,16	8	7,9,11,14				
U114	HI-201		5,16		13	4		
U115	MC1403		3					
U201	MC1496							
U202	MC1733P							
U203	MC1733P							
U204	TL441C	8	13					
U205	CA3240E	8					4	
U206	CA3240E	8	5				4	
U207	CA3240E		3		8	4		
U301	MC3488A		4		8	5		
U302	MC1496							
U303	CA3053							
U304	CA3240E				8	4		
U305	CA3240E				8	4		
U306	CA3240E				8	4		
U307	MC1733P							
U308	LM311	8	1,4				4	
U309	LM311		4		8			
U310	74HC04	13,14	7					
U311	74LS221		8					3,10,11,16
U312	74HC02		7					14
U313	LF356				7	4		
U314	CA3240E				8	4		
U315	HI-201		5		13	4		
U316	LM311		4		8	4		
U317	CA3053		7			4		

36930-40 A

Figure 10-2b. Schematic (Sheet 2 of 5)

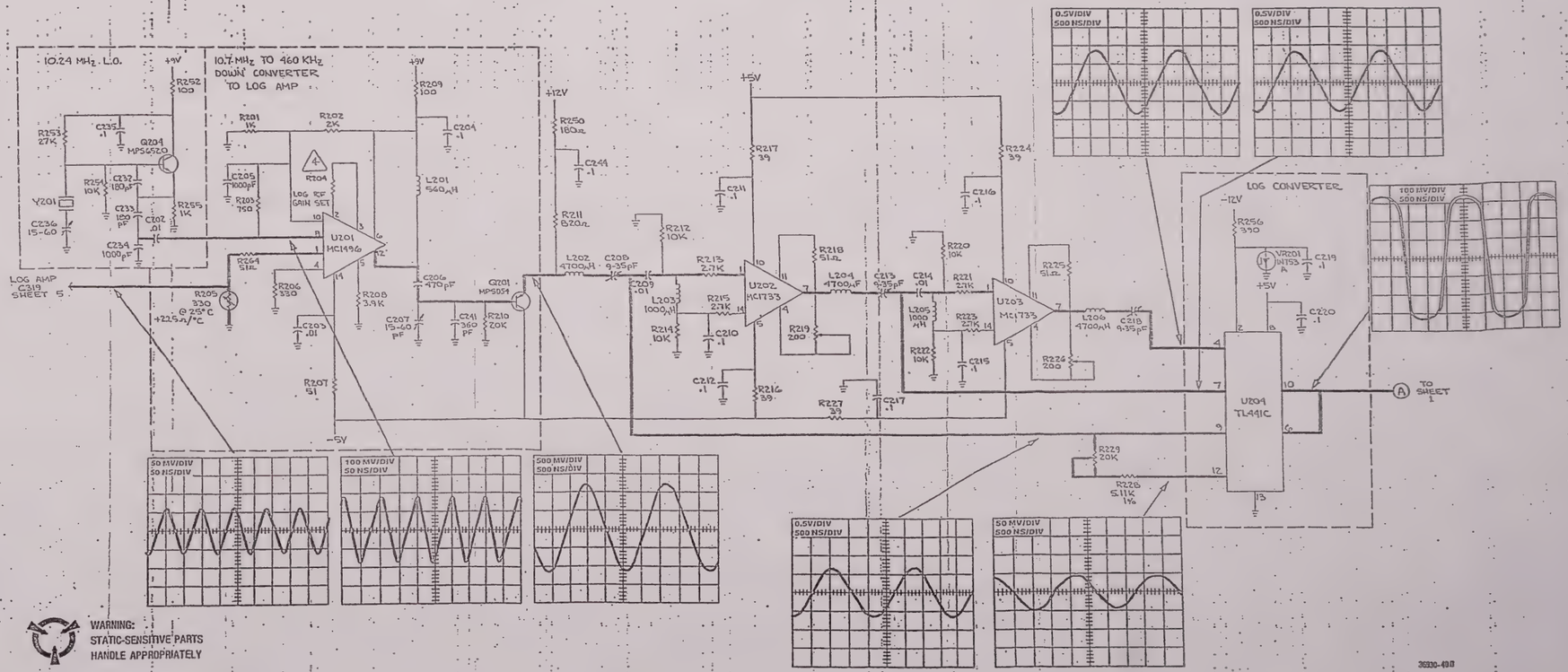

RECEIVER BOARD (A8)

(RTL-1019A)

Figure 10-2c. Schematic (Sheet 3 of 5)

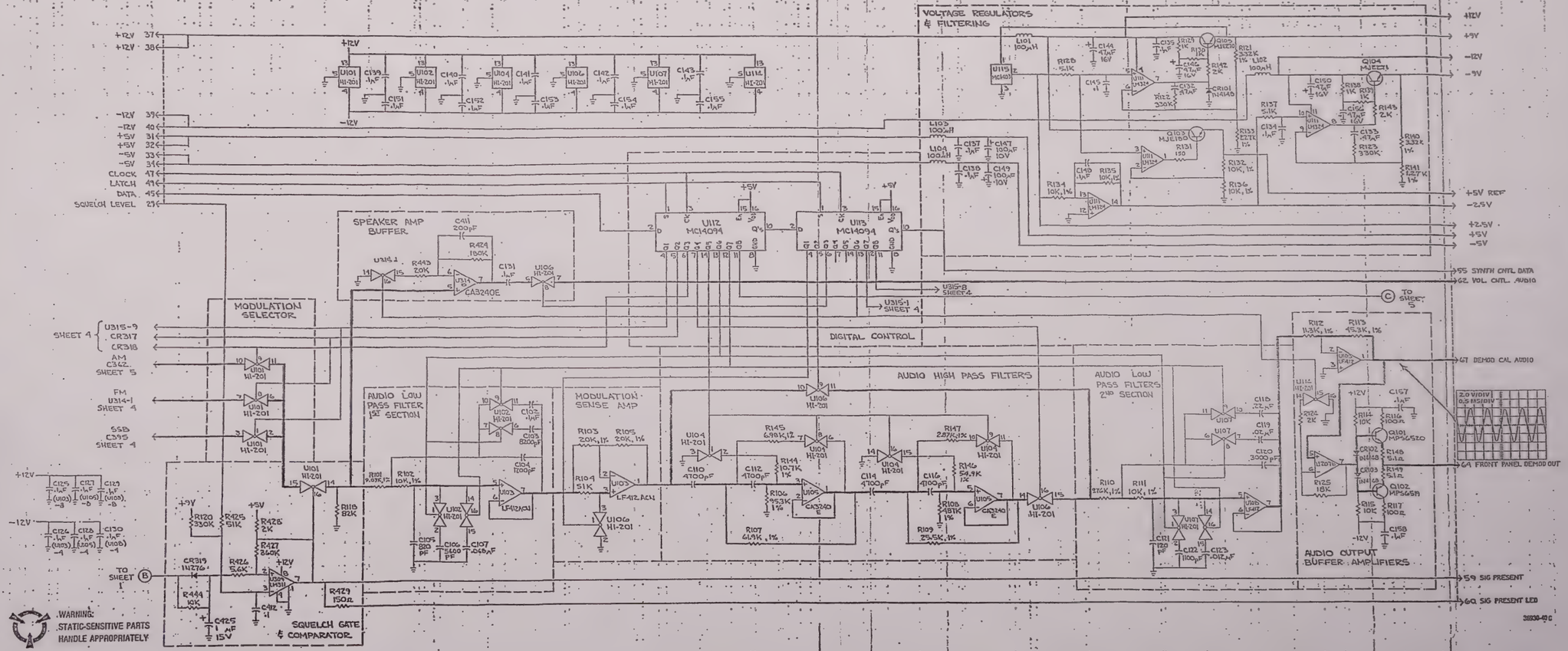

10-13

Figure 10-2d. Schematic (Sheet 4 of 5)

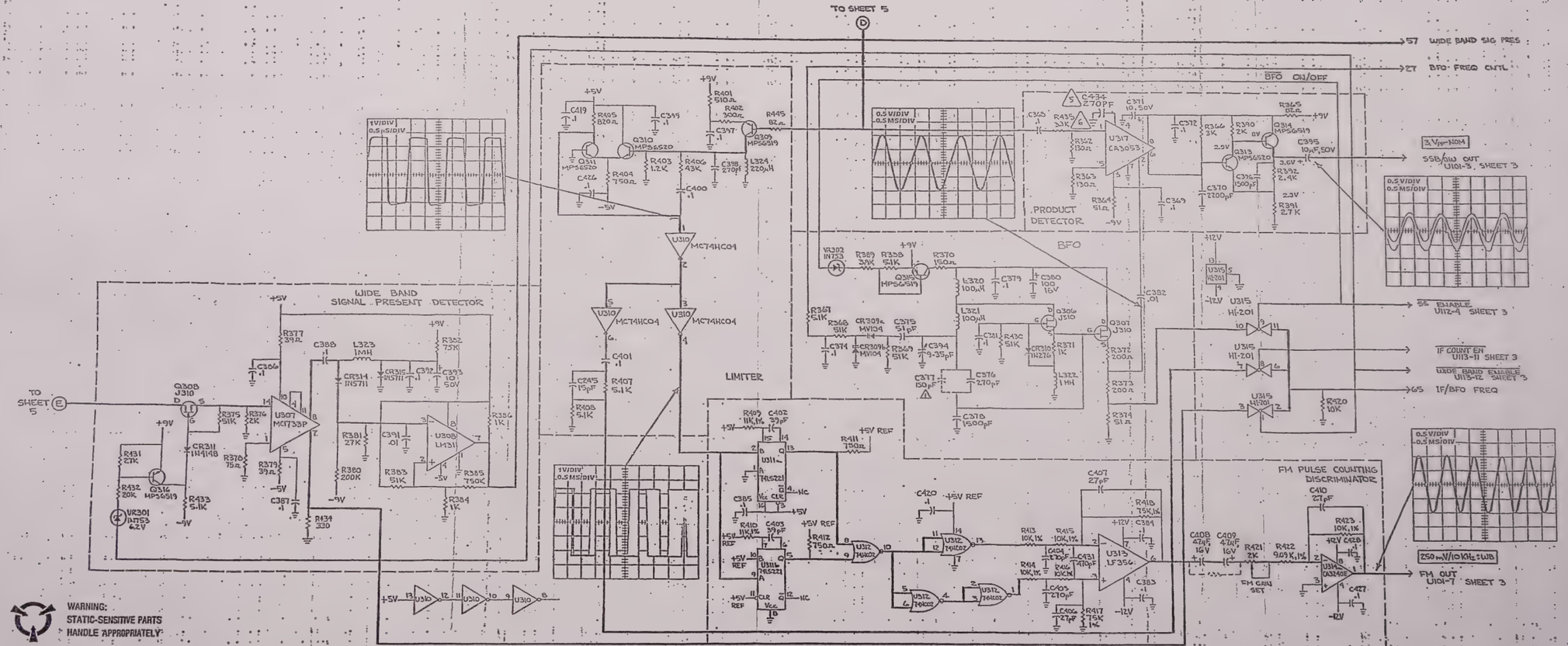

RECEIVER BOARD (A8)

(RTL-1019A)

Figure 10-2e. Schematic (Sheet 5 of 5)

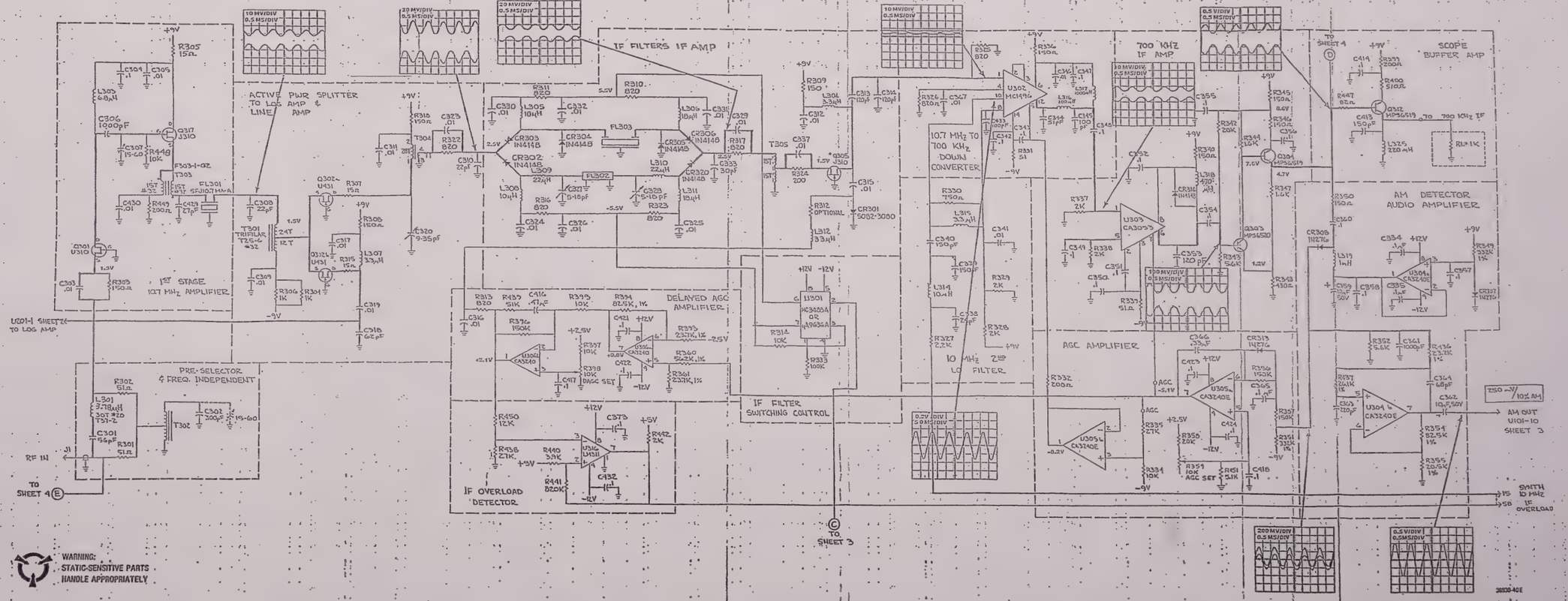

WARNING:
STATIC-SENSITIVE PARTS
HANDLE APPROPRIATELY

1015/10-16

RECEIVER BOARD (A8)

(RTL-1019A)

Figure 10-3a. Printed Wiring Board Assembly and Parts List (Sheet 1 of 4)

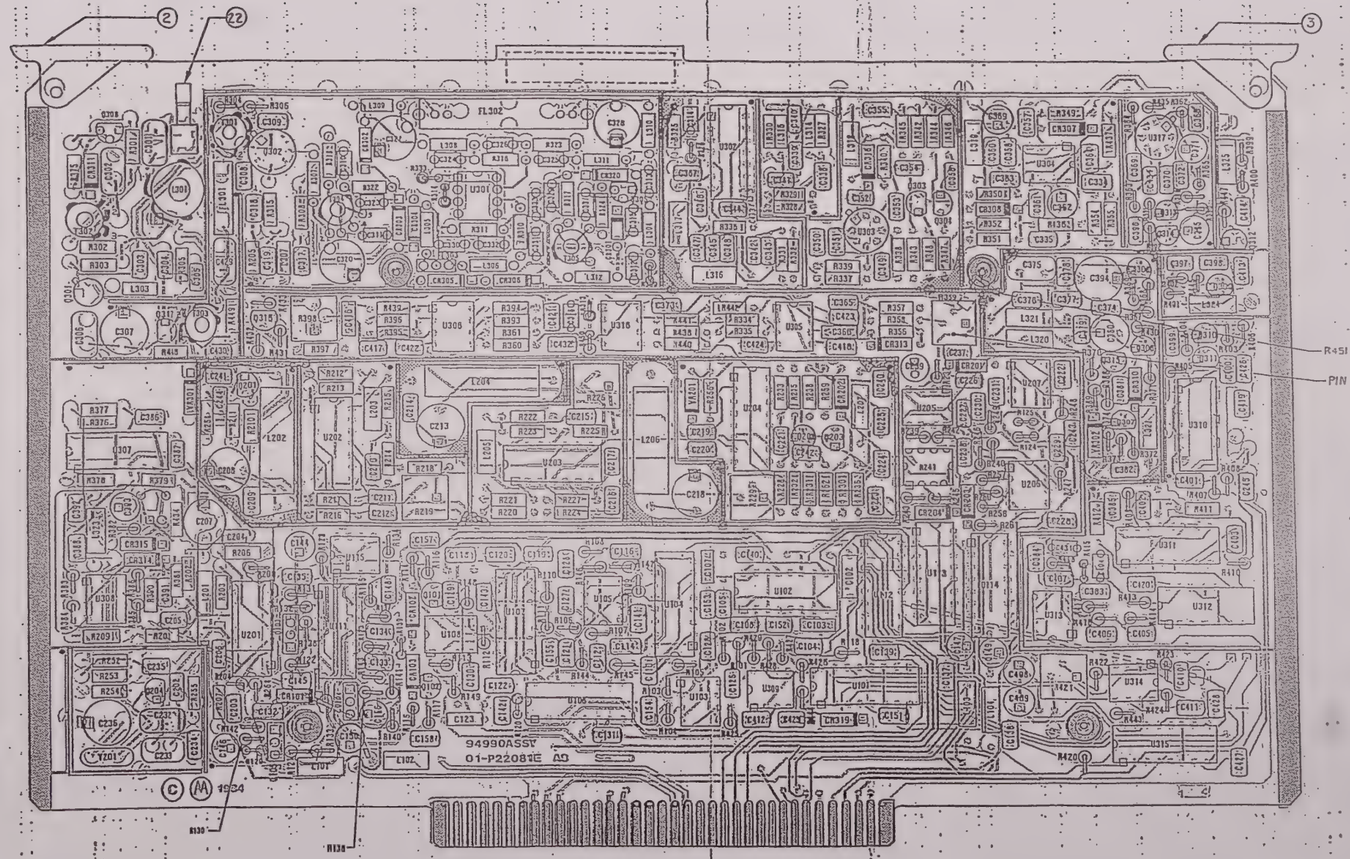

FRONT AND BACK OF FOUR LAYER RECEIVER BOARD. COMPONENTS, AND COMPONENT SIDE TRACK SHOWN IN BLACK. SOLDER-SIDE TRACK SHOWN IN ORANGE.

(See Sheet 2, p. 10-19, for Parts List)

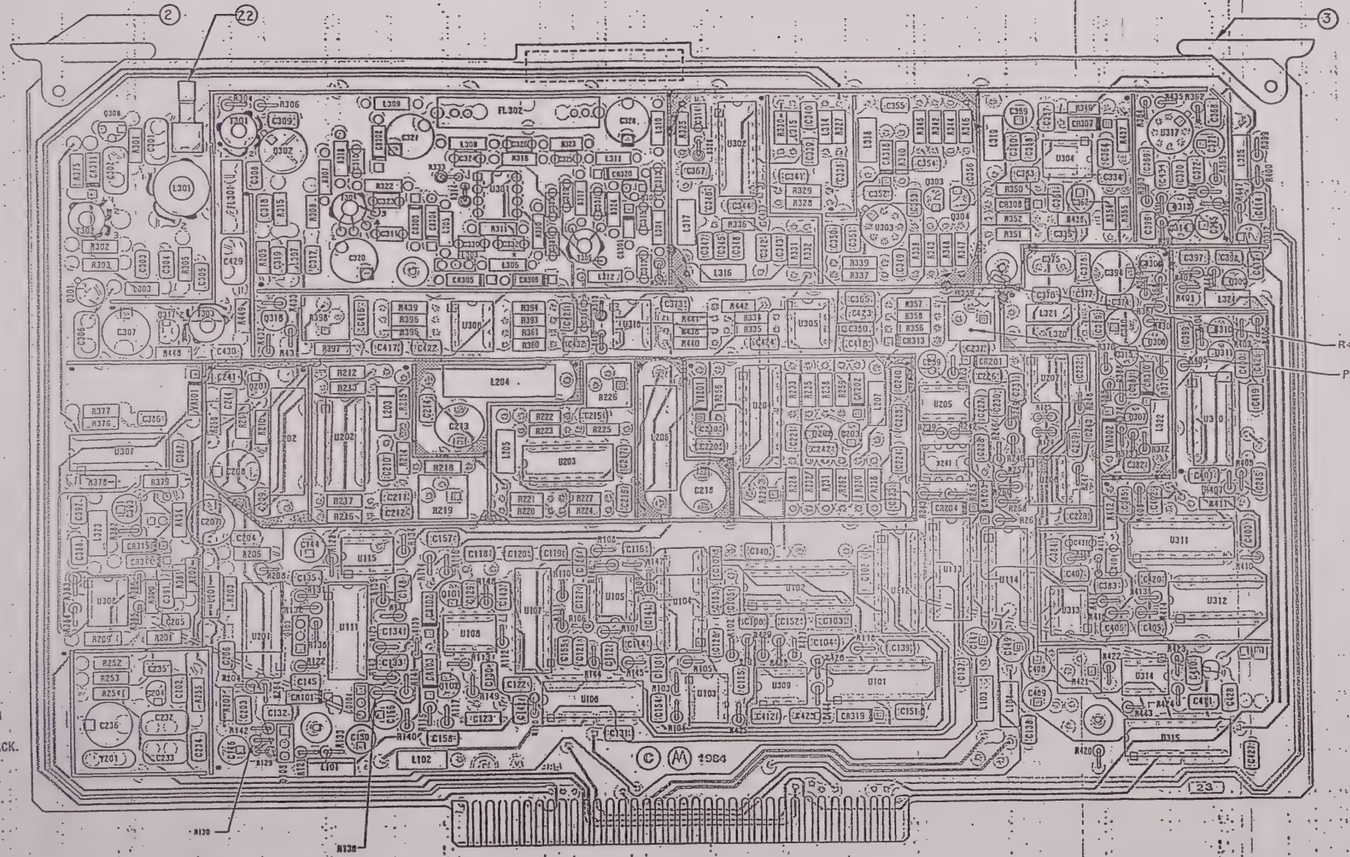

RECEIVER BOARD (A8)
RTL-1019A

Find No.	Qty. Req.	Part No.	Nomenclature	Part Value
002	1	45-80339B28	CARD EJECTOR	
003	1	45-80339B41	CARD EJECTOR	MARKED
022	1	09-80344B23	CONNECTOR	
022	1	15-80370A09	COVER, RECEIVER ASSEMBLY	
033	4	03-124432	SCREW	112-40X.250
C102	1	08-80343B12	CAPACITOR	.1UF-10+100
C103	1	21-80342B41	CAPACITOR	8200PF-5-50
C104	1	21-80341B49	CAPACITOR	1200PF-5-50
C105	1	21-80341B30	CAPACITOR	820PF-5-50
C106	1	21-80341B65	CAPACITOR	5600PF-5-50
C107	1	08-80343B19	CAPACITOR	.068UF-5-63
C110	1	21-80341B83	CAPACITOR	4700PF-5-50
C112	1	21-80341B83	CAPACITOR	4700PF-5-50
C114	1	21-80341B83	CAPACITOR	4700PF-5-50
C116	1	21-80341B83	CAPACITOR	4700PF-5-50
C118	1	21-80372B56	CAPACITOR	.22UF-5-63
C119	1	21-80342B39	CAPACITOR	.02UF-5-50
C120	1	21-80341B57	CAPACITOR	3000PF-5-20
C121	1	21-80341B48	CAPACITOR	120PF-5-50
C122	1	21-80341B67	CAPACITOR	3100PF-5-50
C123	1	21-80342B35	CAPACITOR	.012UF-10-50
C125	1	21-80342B10	CAPACITOR	.1UF-20-50
C126	1	21-80342B10	CAPACITOR	.1UF-20-50
C127	1	21-80342B10	CAPACITOR	.1UF-20-50
C128	1	21-80342B10	CAPACITOR	.1UF-20-50
C129	1	21-80342B10	CAPACITOR	.1UF-20-50
C130	1	21-80342B10	CAPACITOR	.1UF-20-50
C131	1	21-80342B10	CAPACITOR	.1UF-20-50
C132	1	21-80342B14	CAPACITOR	.47UF-20-50
C133	1	21-80342B14	CAPACITOR	.47UF-20-50
C134	1	21-80342B10	CAPACITOR	.1UF-20-50
C135	1	21-80342B10	CAPACITOR	.1UF-20-50
C137	1	21-80342B10	CAPACITOR	.1UF-20-50
C138	1	21-80342B10	CAPACITOR	.1UF-20-50
C139	1	21-80342B10	CAPACITOR	.1UF-20-50
C140	1	21-80342B10	CAPACITOR	.1UF-20-50
C141	1	21-80342B10	CAPACITOR	.1UF-20-50
C142	1	21-80342B10	CAPACITOR	.1UF-20-50
C143	1	21-80342B10	CAPACITOR	.1UF-20-50
C144	1	23-80341B11	CAPACITOR	47UF-20-16
C145	1	21-80342B10	CAPACITOR	.1UF-20-50
C146	1	23-80341B11	CAPACITOR	47UF-20-16
C147	1	23-80341B07	CAPACITOR	100UF-20-10
C148	1	21-80342B10	CAPACITOR	.1UF-20-50
C149	1	23-80341B07	CAPACITOR	100UF-20-10
C150	1	23-80341B11	CAPACITOR	47UF-20-16
C151	1	21-80342B10	CAPACITOR	.1UF-20-50
C152	1	21-80342B10	CAPACITOR	.1UF-20-50
C153	1	21-80342B10	CAPACITOR	.1UF-20-50
C154	1	21-80342B10	CAPACITOR	.1UF-20-50
C155	1	21-80342B10	CAPACITOR	.1UF-20-50
C156	1	23-80341B11	CAPACITOR	47UF-20-16
C157	1	21-80342B10	CAPACITOR	.1UF-20-50
C158	1	21-80342B10	CAPACITOR	.1UF-20-50
C202	1	21-80342B09	CAPACITOR	.01UF-20-50
C203	1	21-80342B09	CAPACITOR	.01UF-20-50
C204	1	21-80342B10	CAPACITOR	.1UF-20-50
C205	1	21-80341B93	CAPACITOR	1000PF-20-100
C206	1	21-80341B82	CAPACITOR	470PF-5-50
C207	1	20-80343B37	CAPACITOR, VARIABLE	15TO 60PF-200
C208	1	20-80395A57	CAPACITOR	9TO 35PF-200
C209	1	21-80342D09	CAPACITOR	.01UF-20-50
C210	1	21-80342B10	CAPACITOR	.1UF-20-50
C211	1	21-80342B10	CAPACITOR	.1UF-20-50
C212	1	21-80342B10	CAPACITOR	.1UF-20-50
C213	1	20-80395A57	CAPACITOR	9TO 35PF-200
C214	1	21-80342B09	CAPACITOR	.01UF-20-50
C215	1	21-80342B10	CAPACITOR	.1UF-20-50
C216	1	21-80342B10	CAPACITOR	.1UF-20-50
C217	1	21-80342B10	CAPACITOR	.1UF-20-50
C218	1	20-80395A57	CAPACITOR, VARIABLE	9-35PF
C219	1	21-80342B10	CAPACITOR	.1UF-20-50
C220	1	21-80342B10	CAPACITOR	.1UF-20-50
C221	1	21-80342B10	CAPACITOR	.1UF-20-50
C222	1	21-80342B10	CAPACITOR	.1UF-20-50
C223	1	21-80342B10	CAPACITOR	.1UF-20-50
C224	1	21-80342B10	CAPACITOR	.1UF-20-50
C225	1	21-80342B01	CAPACITOR	.022UF-10-100
C226	1	21-80342B10	CAPACITOR	.1UF-20-50
C227	1	21-80341B69	CAPACITOR	330PF-5-50
C228	1	21-80342B10	CAPACITOR	.1UF-20-50

Figure 10-3b. Printed Wiring Board Assembly and Parts List (Sheet 2 of 4)

RECEIVER BOARD (A8)

(RTL-1019A)

Figure 10-3b. Printed Wiring Board Assembly and Parts List (Sheet 3 of 4)

RECEIVER BOARD (A8) (Cont)
RTL-1019A

Find No.	Qty. Req.	Part No.	Nomenclature	Part Value
C229	1	21-80342B10	CAPACITOR	.1UF-20-50
C230	1	21-80342B10	CAPACITOR	.1UF-20-50
C231	1	21-80342B10	CAPACITOR	.1UF-20-50
C232	1	21-80359A35	CAPACITOR	180PF-5-500
C233	1	21-80359A95	CAPACITOR	180PF-5-500
C234	1	21-80341D46	CAPACITOR	1000PF-5-50
C235	1	21-80342B10	CAPACITOR	.1UF-20-50
C236	1	20-80343S37	CAPACITOR	15 TO 60PF-200
C237	1	21-80342B10	CAPACITOR	.1UF-20-50
C238	1	21-80342B10	CAPACITOR	.1UF-20-50
C239	1	23-80341B15	CAPACITOR	.1UF-20-50
C240	1	21-80342B10	CAPACITOR	.1UF-20-50
C241	1	21-80341B72	CAPACITOR	360PF-5-50
C242	1	21-80342B10	CAPACITOR	.1UF-20-50
C243	1	21-80344B38	CAPACITOR	.047UF-10-100
C244	1	21-80342B10	CAPACITOR	.1UF-20-50
C245	1	21-80341B53	CAPACITOR	15PF-5-50
C301	1	21-80339B17	CAPACITOR	300PF-5-300
C302	1	21-80339B23	CAPACITOR	.01UF-10-100
C303	1	21-80341D94	CAPACITOR	.1UF-20-50
C304	1	21-80342B10	CAPACITOR	.01UF-10-100
C305	1	21-80341B94	CAPACITOR	1000PF-5-50
C306	1	21-80341B54	CAPACITOR	15PF-5-50
C307	1	20-80343B37	CAPACITOR, VARIABLE	15 TO 60PF-200
C308	1	21-80341B62	CAPACITOR	22PF-5-50
C309	1	21-80341B94	CAPACITOR	.01UF-10-100
C310	1	21-80341B52	CAPACITOR	22PF-5-50
C311	1	21-80341B94	CAPACITOR	.01UF-10-100
C312	1	21-80341B94	CAPACITOR	.01UF-10-100
C313	1	21-80341B48	CAPACITOR	120PF-5-50
C314	1	21-80341B48	CAPACITOR	120PF-5-50
C315	1	21-80341B94	CAPACITOR	.01UF-10-100
C316	1	21-80341B94	CAPACITOR	.01UF-10-100
C317	1	21-80341B94	CAPACITOR	.01UF-10-100
C318	1	21-80341B97	CAPACITOR	62PF-5-50
C319	1	21-80341B94	CAPACITOR	.01UF-10-100
C320	1	20-80343S37	CAPACITOR	9 TO 35PF-200
C321	1	20-80336A57	CAPACITOR	.01UF-10-100
C323	1	21-80341B94	CAPACITOR	.01UF-10-100
C324	1	21-80341B94	CAPACITOR	.01UF-10-100
C325	1	21-80341B94	CAPACITOR	.01UF-10-100
C326	1	21-80341B94	CAPACITOR	5 TO 18PF-200
C327	1	20-80343B35	CAPACITOR	5 TO 18PF-200
C328	1	20-80343B35	CAPACITOR	.01UF-10-100
C329	1	21-80341B94	CAPACITOR	.01UF-10-100
C330	1	21-80341B94	CAPACITOR	.01UF-10-100
C331	1	21-80341B94	CAPACITOR	.01UF-10-100
C332	1	21-80341B94	CAPACITOR	39PF-5-50
C333	1	21-80341B56	CAPACITOR	51PF-5-500
C334	1	21-80339B16	CAPACITOR	100PF-5-50
C335	1	21-80341B45	CAPACITOR	.01UF-10-100
C337	1	21-80341B94	CAPACITOR	24PF-5-50
C338	1	21-80341B63	CAPACITOR	150PF-5-50
C339	1	21-80341B54	CAPACITOR	15PF-5-50
C340	1	21-80341D54	CAPACITOR	.01UF-10-100
C341	1	21-80341B94	CAPACITOR	.1UF-20-50
C342	1	21-80342B10	CAPACITOR	.1UF-20-50
C343	1	21-80342B10	CAPACITOR	51PF-5-500
C344	1	21-80339B16	CAPACITOR	100PF-5-50
C345	1	21-80341B45	CAPACITOR	.01UF-10-100
C346	1	21-80341B94	CAPACITOR	.1UF-20-50
C347	1	21-80342B10	CAPACITOR	.1UF-20-50
C348	1	21-80342B10	CAPACITOR	.1UF-20-50
C349	1	21-80342B10	CAPACITOR	.1UF-20-50
C350	1	21-80342B10	CAPACITOR	.1UF-20-50
C351	1	21-80342B10	CAPACITOR	.1UF-20-50
C352	1	21-80342B10	CAPACITOR	120PF-5-50
C353	1	21-80341B48	CAPACITOR	.1UF-20-50
C354	1	21-80342B10	CAPACITOR	.1UF-20-50
C355	1	21-80342B10	CAPACITOR	.1UF-20-50
C356	1	21-80342B10	CAPACITOR	.1UF-20-50
C357	1	21-80342B10	CAPACITOR	.1UF-20-50
C358	1	23-80341B15	CAPACITOR	.1UF-20-50
C359	1	21-80342B10	CAPACITOR	1000PF-5-50
C361	1	21-80341B46	CAPACITOR	10UF-20-50
C362	1	23-80341B15	CAPACITOR	220PF-5-50
C363	1	21-80341B50	CAPACITOR	68PF-5-50
C364	1	21-80341B88	CAPACITOR	.1UF-10-100
C365	1	21-80341B96	CAPACITOR	.33UF-10-100
C366	1	21-80342B43	CAPACITOR	.01UF-10-100
C367	1	21-80341B94	CAPACITOR	.1UF-20-50
C368	1	21-80342B10	CAPACITOR	.1UF-20-50
C369	1	21-80342B10	CAPACITOR	.0022UF-5-50
C370	1	21-80341B51	CAPACITOR	10UF-20-50
C371	1	23-80341B15	CAPACITOR	.1UF-20-50
C372	1	21-80342B10	CAPACITOR	.1UF-20-50
C373	1	21-80342B10	CAPACITOR	.1UF-20-50
C374	1	21-80342B10	CAPACITOR	.1UF-20-50
C375	1	21-80339B15	CAPACITOR	51PF-5-500
C376	1	21-80339S22	CAPACITOR	270PF-5-300
C377	1	21-80341B54	CAPACITOR	150PF-5-50 NOMINAL
C377	S01	21-80341B48	CAPACITOR	120PF-5-50
C377	S01	21-80341B57	CAPACITOR	180PF-5-50
C378	1	21-80341B55	CAPACITOR	1500PF-5-50
C379	1	21-80342B10	CAPACITOR	.1UF-20-50
C380	1	23-84855F26	CAPACITOR	1000UF-20-16
C381	1	21-80342B10	CAPACITOR	.1UF-20-50
C382	1	21-80341B94	CAPACITOR	.01UF-10-100
C383	1	21-80342B10	CAPACITOR	.1UF-20-50
C384	1	21-80342B10	CAPACITOR	.1UF-20-50
C385	1	21-80342B10	CAPACITOR	.1UF-20-50
C386	1	21-80342B10	CAPACITOR	.1UF-20-50
C387	1	21-80342B10	CAPACITOR	.1UF-20-50
C388	1	21-80342B10	CAPACITOR	.1UF-20-50
C391	1	21-80341B94	CAPACITOR	.01UF-10-100
C392	1	21-80342B10	CAPACITOR	.1UF-20-50
C393	1	23-80341B15	CAPACITOR	.1UF-20-50
C394	1	20-80336A57	CAPACITOR	9 TO 35PF-200
C395	1	23-80341B15	CAPACITOR	10UF-20-50
C396	1	21-80341B55	CAPACITOR	1500PF-5-50
C397	1	21-80342B10	CAPACITOR	.1UF-20-50
C398	1	21-80341B65	CAPACITOR	270PF-5-50
C399	1	21-80342B10	CAPACITOR	.1UF-20-50
C400	1	21-80342B10	CAPACITOR	.1UF-20-50
C401	1	21-80342B10	CAPACITOR	.1UF-20-50
C402	1	21-80341D74	CAPACITOR	39PF-5-50
C403	1	21-80341D74	CAPACITOR	39PF-5-50
C404	1	21-80341B65	CAPACITOR	270PF-5-50
C405	1	21-80341B65	CAPACITOR	270PF-5-50
C406	1	21-80341B64	CAPACITOR	22PF-5-50
C407	1	21-80341B64	CAPACITOR	27PF-5-50
C408	1	23-80341B11	CAPACITOR	47UF-20-16
C409	1	23-80341B11	CAPACITOR	47UF-20-16
C410	1	21-80341B64	CAPACITOR	22PF-5-50
C411	1	21-80341B58	CAPACITOR	200PF-5-50
C412	1	21-80342B10	CAPACITOR	.1UF-20-50
C413	1	21-80341B54	CAPACITOR	150PF-5-50
C414	1	21-80342B10	CAPACITOR	.1UF-20-50
C416	1	21-80342B45	CAPACITOR	.47UF-10-100
C417	1	21-80342B10	CAPACITOR	.1UF-20-50
C418	1	21-80342B10	CAPACITOR	.1UF-20-50
C419	1	21-80342B10	CAPACITOR	.1UF-20-50
C420	1	21-80342B10	CAPACITOR	.1UF-20-50
C421	1	21-80342B10	CAPACITOR	.1UF-20-50
C422	1	21-80342B10	CAPACITOR	.1UF-20-50
C423	1	21-80342B10	CAPACITOR	.1UF-20-50
C424	1	21-80342B10	CAPACITOR	.1UF-20-50
C425	1	23-80344B35	CAPACITOR	1UF-20-35
C426	1	21-80342B10	CAPACITOR	.1UF-20-50
C427	1	21-80342B10	CAPACITOR	.1UF-20-50
C428	1	21-80342B10	CAPACITOR	.1UF-20-50
C429	1	21-80341B64	CAPACITOR	27PF-5-50
C430	1	21-80341B94	CAPACITOR	.01UF-10-100
C431	1	21-80341B81	CAPACITOR	470PF-5-50
C432	1	21-80342B10	CAPACITOR	.1UF-20-50
C433	1	21-80370A21	CAPACITOR	100PF-20-100
C434	1	21-80369A91	CAPACITOR	270PF-5-300
CR101	1	48-84463K02	DIODE	
CR102	1	48-84463K02	DIODE	
CR103	1	48-84463K02	DIODE	
CR201	1	48-83192A09	DIODE	
CR202	1	48-83192A09	DIODE	
CR203	1	48-84463K02	DIODE	
CR204	1	48-84463K02	DIODE	
CR301	1	48-83043S24	DIODE	
CR302	1	48-84463K02	DIODE	
CR303	1	48-84463K02	DIODE	
CR304	1	48-84463K02	DIODE	
CR305	1	48-84463K02	DIODE	
CR306	1	48-84463K02	DIODE	
CR307	1	48-83192A09	DIODE	
CR308	1	48-83192A09	DIODE	
CR309	1	48-80345A73	DIODE	
CR310	1	48-83192A09	DIODE	
CR311	1	48-84463K02	DIODE	
CR313	1	48-83192A09	DIODE	
CR314	1	48-87643C01	DIODE	
CR315	1	48-87643C01	DIODE	
CR316	1	48-84463K02	DIODE	
CR319	1	48-83192A09	DIODE	
CR320	1	48-84463K02	DIODE	
FL301	1	48-80340977	FILTER, CERAMIC(10.700MHZ) USE RED DOT ONLY	
FL302	1	48-80344B22	FILTER CRYSTAL	10.700 MHZ
FL303	1	48-80340B80	FILTER, CERAMIC, 10.700MHZ	USE RED DOT ONLY
L101	1	24-80369A37	COIL	100UH
L102	1	24-80369A37	COIL	100UH
L103	1	24-80369A37	COIL	100UH
L104	1	24-80369A37	COIL	100UH
L201	1	24-80369A40	COIL	560UH
L202	1	24-80369A44	COIL	4700UH
L203	1	24-80369A42	COIL	1000UH
L204	1	24-80369A44	COIL	4700UH
L205	1	24-80369A42	COIL	1000UH
L206	1	24-80369A44	COIL	4700UH
L207	1	24-80369A42	COIL	1000UH
L301	1	23-80342B83	COIL	3.9UH
L303	1	24-80369A28	COIL	6.8UH
L304	1	24-80340B54	COIL	3.3UH
L305	1	24-80369A29	COIL	10UH
L306	1	24-80340B56	COIL	18UH
L307	1	24-80340B54	COIL	3.3UH
L308	1	24-80369A29	COIL	10UH
L309	1	24-80369A31	COIL	22UH
L310	1	24-80369A31	COIL	22UH
L311	1	24-80340B56	COIL	18UH
L312	1	24-80340B59	COIL	33UH
L314	1	24-80369A29	COIL	10UH
L315	1	24-80344B71	COIL	100UH
L316	1	24-80344B71	COIL	100UH
L317	1	24-80344B70	COIL	1000UH
L318	1	24-80344B83	COIL	470UH
L319	1	24-80369A42	COIL	1000UH
L320	1	24-80369A37	COIL	100UH
L321	1	24-80369A37	COIL	100UH
L322	1	24-80369A42	COIL	1000UH
L323	1	24-80369A42	COIL	1000UH
L324	1	24-80369A38	COIL	220UH
L325	1	24-80369A38	COIL	220UH
Q101	1	48-80340B86	TRANSISTOR	MPS6520
Q102	1	48-80340B85	TRANSISTOR	MPS619
Q103	1	48-80340B28	TRANSISTOR	
Q104	1	48-80340B30	TRANSISTOR	
Q105	1	48-80340B23	TRANSISTOR	
Q201	1	48-80869B49	TRANSISTOR	
Q202	1	48-80340B95	TRANSISTOR	MSP6520
Q203	1	48-80340B85	TRANSISTOR	MPS6519
Q204	1	48-80340B85	TRANSISTOR	MPS6520
Q301	1	48-80869933	TRANSISTOR	U310, SCREENED
Q302	1	48-80369A90	TRANSISTOR	
Q303	1	48-80340B85	TRANSISTOR	MPS6520
Q304	1	48-80340B85	TRANSISTOR	MPS6519
Q305	1	48-80869878	TRANSISTOR	
Q306	1	48-80869878	TRANSISTOR	
Q307	1	48-80369878	TRANSISTOR	
Q308	1	48-80869878	TRANSISTOR	
Q309	1	48-80340B85	TRANSISTOR	MPS6519
Q310	1	48-80340B85	TRANSISTOR	MPS6520
Q311	1	48-80340B86	TRANSISTOR	MPS6520
Q312	1	48-80340B85	TRANSISTOR	MPS6519
Q313	1	48-80340B85	TRANSISTOR	MPS6520
Q314	1	48-80340B85	TRANSISTOR	MPS6519
Q315	1	48-80340B85	TRANSISTOR	MPS6519
Q316	1	48-80340B85	TRANSISTOR	MPS6519
Q317	1	48-80869878	TRANSISTOR	
R101	1	05-10621C87	RESISTOR	9.09K-1-1/4
R102	1	05-10621C91	RESISTOR	10K-1-1/4
R103	1	05-10621D21	RESISTOR	20K-1-1/4
R104	1	05-11009C90	RESISTOR	31K-5-1/4
R105	1	05-10621D21	RESISTOR	20K-1-1/4
R106	1	05-10621D86	RESISTOR	95.3K-1-1/4
R107	1	05-10621B89	RESISTOR	61.9K-1-1/4
R108	1	05-10621E55	RESISTOR	4.07K-1-1/4
R109	1	05-10621D31	RESISTOR	25.5K-1-1/4
R110	1	05-10621C90	RESISTOR	9.76K-1-1/4
R111	1	05-10621C91	RESISTOR	10K-1-1/4
R112	1	05-10621C96	RESISTOR	11.3K-1-1/4
R113	1	05-10621D55	RESISTOR	45.3K-1-1/4
R114	1	05-11009C73	RESISTOR	10K-5-1/4
R115	1	05-11009C73	RESISTOR	10K-5-1/4
R116	1	05-11009C25	RESISTOR	100-5-1/4
R117	1	05-11009C25	RESISTOR	100-5-1/4
R118	1	05-11009C55	RESISTOR	82K-5-1/4
R120	1	05-11009D10	RESISTOR	330K-5-1/4
R121	1	05-10621C45	RESISTOR	3.32K-1-1/4
R122	1	05-11009D10	RESISTOR	330K-5-1/4
R123	1	05-11009D10	RESISTOR	330K-5-1/4
R124	1	05-11009C56	RESISTOR	2K-5-1/4
R125	1	05-11009C79	RESISTORS	18K-5-1/4
R128	1	05-11009C66	RESISTOR	5.11K-5-1/4
R129	1	05-11009C49	RESISTOR	1K-5-1/4
R130	1	05-11009C49	RESISTOR	1K-5-1/4
R131	1	05-11009C53	RESISTOR	1.5K-5-1/4
R132	1	05-10621C91	RESISTOR	10K-1-1/4
R133	1	05-10621C05	RESISTOR	1.27K-1-1/4
R134	1	05-10621C91	RESISTOR	10K-1-1/4
R135	1	05-10621C91	RESISTOR	10K-1-1/4
R136	1	05-10621C91	RESISTOR	10K-1-1/4
R137	1	05-11009C66	RESISTOR	5.1K-5-1/4
R138	1	05-11009C49	RESISTOR	1K-5-1/4
R139	1	05-11009C49	RESISTOR	1K-5-1/4
R140	1	05-10621C45	RESISTOR	3.32K-1-1/4
R141	1	05-10621C05	RESISTOR	1.27-1-1/4
R142	1	05-11009C56	RESISTOR	2K-5-1/4
R143	1	05-11009C56	RESISTOR	2K-5-1/4
R144	1	05-10621C94	RESISTOR	10.7K-1-1/4
R145	1	05-10621C76	RESISTOR	6.65-1-1/4
R146	1	05-10621D53	RESISTOR	54.9K-1-1/4
R147	1	05-10621C39	RESISTOR	2.87K-1-1/4
R148	1	05-80036G18	RESISTOR	5.1-5-1/4
R149	1	05-80036G18	RESISTOR	5.1-5-1/4
R201	1	05-11009C49	RESISTOR	1K-5-1/4
R202	1	05-11009C56	RESISTOR	2K-5-1/4
R203	1	05-11009C66	RESISTOR	750-5-1/4
R204	1	05-80124A45	RESISTOR	680-5-1/4
R205	1	05-80339B75	THERMISTOR	330-10-1/4
R206	1	05-11009C37	RESISTOR	330-5-1/4
R207	1	05-11009C18	RESISTOR	51-5-1/4
R208	1	05-11009C63	RESISTOR	3.9K-5-1/4
R209	1	05-11009C25	RESISTOR	100-5-1/4
R210	1	05-11009C80	RESISTOR	20K-5-1/4
R211	1	05-11009C47	RESISTOR	820-5-1/4
R212	1	05-11009C73	RESISTOR	10K-5-1/4
R213	1	05-11009C59	RESISTOR	2.7K-5-1/4
R214	1	05-11009C73	RESISTOR	10K-5-1/4
R215	1	05-11009C59	RESISTOR	2.7K-5-1/4
R216	1	05-11009C15	RESISTOR	39-5-1/4
R217	1	05-11009C15	RESISTOR	39-5-1/4
R218	1	05-11009C18	RESISTOR	51-5-1/4
R219	1	18-803428B7	RESISTOR, VARIABLE	200
R220	1	05-11009C73	RESISTOR	10K-5-1/4
R221	1	05-11009C59	RESISTOR	2.7K-5-1/4
R222	1	05-11009C73	RESISTOR	10K-5-1/4
R223	1	05-11009C59	RESISTOR	2.7K-5-1/4
R224	1	05-11009C15	RESISTOR	39-5-1/4
R225	1	05-11009C18	RESISTOR	51-5-1/4
R226	1	18-803428B7	RESISTOR, VARIABLE	200
R227	1	05-11009C15	RESISTOR	39-5-1/4
R228	1	05-10621C63	RESISTOR	5.11K-1-1/4
R229	1	18-83452F16	RESISTOR, VARIABLE	20K
R230	1	05-11009C29	RESISTOR	150-5-1/4
R231	1	05-10621D42	RESISTOR	3.09K-1-1/4
R232	1	05-10621D12	RESISTOR	16.2K-1-1/4
R233	1	05-10621C59	RESISTOR	4.64K-1-1/4
R235	1	05-10621B94	RESISTOR	1K-1-1/4
R236	1	05-11009C41	RESISTOR	470-5-1/4
R237	1	05-10621E39	RESISTOR	332K-1-1/4
R238	1	05-11009C61	RESISTOR	3.3K-5-1/4
R239	1	05-10621D21	RESISTOR	20K-1-1/4
R240	1	05-10621D49	RESISTOR	39.2K-1-1/4
R241	1	18-80344B26	RESISTOR, VARIABLE	10K-1K
R242	1	05-10621D21	RESISTOR	20K-1-1/4
R243	1	05-11009C56	RESISTOR	2K-5-1/4
R245	1	05-10621C20	RESISTOR	1.82K-1-1/4
R246	1	05-11009C25	RESISTOR	100-5-1/4
R247	1	05-10621C91	RESISTOR	10K-1-1/4
R248	1	05-10621D21	RESISTOR	20K-1-1/4
R249	1	05-10621C87	RESISTOR	9.09K-1-1/4
R250	1	05-11009C31	RESISTOR	180-5-1/4
R252	1	05-11009C25	RESISTOR	100-5-1/4
R253	1	05-11009C83	RESISTOR	27K-5-1/4
R254	1	05-11009C73	RESISTOR	10K-5-1/4
R255	1	05-11009C49	RESISTOR	1K-5-1/4
R256	1	05-11009C39	RESISTOR	390-5-1/4
R257	1	05-11009C66	RESISTOR	5.1K-5-1/4
R258	1	05-10621C33	RESISTOR	2.49K-1-1/4
R259	1	05-10621E39	RESISTOR	332K-1-1/4
R260	1	05-10621C91	RESISTOR	10K-1-1/4
R261	1	05-10621B90	RESISTOR	909-1-1/4
R262	1	05-10621B82	RESISTOR	750-1-1/4
R264	1	05-11009C18	RESISTOR	51-5-1/4
R301	1	05-11009C18	RESISTOR	51-5-1/4
R302	1	05-11009C18	RESISTOR	51-5-1/4
R303	1	05-11009C29	RESISTOR	150-5-1/4
R304	1	05-11009C49	RESISTOR	1K-5-1/4

Find No.	Qty. Req.	Part No.	Nomenclature	Part Value
R305	1	05-00124A05	RESISTOR	15-5-1/4
R306	1	05-11009C49	RESISTOR	1K-5-1/4
R307	1	05-11009C05	RESISTOR	15-5-1/4
R308	1	05-11009C29	RESISTOR	150-5-1/4
R309	1	05-11009C29	RESISTOR	150-5-1/4
R310	1	05-11009C47	RESISTOR	820-5-1/4
R311	1	05-11009C47	RESISTOR	820-5-1/4
R313	1	05-11009C47	RESISTOR	820-5-1/4
R314	1	05-11009C73	RESISTOR	10K-5-1/4
R315	1	05-11009C05	RESISTOR	15-5-1/4
R316	1	05-11009C47	RESISTOR	820-5-1/4
R317	1	05-11009C47	RESISTOR	820-5-1/4
R318	1	05-11009C29	RESISTOR	150-5-1/4
R322	1	05-11009C47	RESISTOR	820-5-1/4
R323	1	05-11009C47	RESISTOR	820-5-1/4
R324	1	05-11009C22	RESISTOR	200-5-1/4
R325	1	05-11009C47	RESISTOR	820-5-1/4
R326	1	05-11009C47	RESISTOR	820-5-1/4
R327	1	05-11009C57	RESISTOR	2.2-5-1/4
R328	1	05-11009C56	RESISTOR	2K-5-1/4
R329	1	05-11009C56	RESISTOR	2K-5-1/4
R330	1	05-11009C46	RESISTOR	750-5-1/4
R331	1	05-11009C18	RESISTOR	51-5-1/4
R332	1	05-11009C32	RESISTOR	200-5-1/4
R333	1	05-11009C97	RESISTOR	100K-5-1/4
R334	1	05-11009C73	RESISTOR	10K-5-1/4
R335	1	05-11009C63	RESISTOR	2.7K-5-1/4
R336	1	05-11009C29	RESISTOR	150-5-1/4
R337	1	05-11009C56	RESISTOR	2K-5-1/4
R338	1	05-11009C56	RESISTOR	2K-5-1/4
R339	1	05-11009C18	RESISTOR	51-5-1/4
R340	1	05-11009C29	RESISTOR	150-5-1/4
R342	1	05-11009C80	RESISTOR	200-5-1/4
R343	1	05-11009C67	RESISTOR	5.6K-5-1/4
R344	1	05-11009C54	RESISTOR	1.5K-5-1/4
R345	1	05-11009C29	RESISTOR	150-5-1/4
R346	1	05-11009C29	RESISTOR	150-5-1/4
R347	1	05-11009C54	RESISTOR	1.5K-5-1/4
R348	1	05-11009C40	RESISTOR	430-5-1/4
R349	1	05-10621E39	RESISTOR	332K-1-1/4
R350	1	05-11009C29	RESISTOR	150-5-1/4
R351	1	05-10521E39	RESISTOR	332K-1-1/4
R352	1	05-11009C67	RESISTOR	5.6K-5-1/4
R354	1	05-10621D90	RESISTOR	82.5K-1-1/4
R355	1	05-10621D24	RESISTOR	20.5K-1-1/4
R356	1	05-11009D02	RESISTOR	150K-5-1/4
R357	1	05-11009D02	RESISTOR	150K-5-1/4
R358	1	05-11009C80	RESISTOR	200-5-1/4
R359	1	18-80342D96	RESISTOR, VARIABLE	10K
R360	1	05-10621D64	RESISTOR	56.2K-1-1/4
R361	1	05-10621D28	RESISTOR	23.7K-1-1/4
R362	1	05-11009C28	RESISTOR	130-5-1/4
R363	1	05-11009C28	RESISTOR	130-5-1/4
R364	1	05-11009C18	RESISTOR	51-5-1/4
R365	1	05-11009C23	RESISTOR	82-5-1/4
R366	1	05-11009C60	RESISTOR	3K-5-1/4
R367	1	05-11009C66	RESISTOR	5.1K-5-1/4
R368	1	05-11009C99	RESISTOR	51K-5-1/4
R369	1	05-11009C99	RESISTOR	51K-5-1/4
R370	1	05-11009C29	RESISTOR	150-5-1/4
R371	1	05-11009C49	RESISTOR	1K-5-1/4
R372	1	05-11009C32	RESISTOR	200-5-1/4
R373	1	06-00124A18	RESISTOR	51-5-1/4
R374	1	06-00124A32	RESISTOR	200-5-1/4
R375	1	05-11009C99	RESISTOR	51K-5-1/4
R376	1	05-11009C56	RESISTOR	2K-5-1/4
R377	1	06-11009C15	RESISTOR	39-5-1/4
R378	1	06-11009C22	RESISTOR	75-5-1/4
R379	1	06-11009C15	RESISTOR	39-5-1/4
R380	1	06-11009D05	RESISTOR	200K-5-1/4
R381	1	05-11009C63	RESISTOR	27K-5-1/4
R382	1	05-11009C94	RESISTOR	75K-5-1/4
R383	1	05-11009C90	RESISTOR	51K-5-1/4
R384	1	06-11009C49	RESISTOR	1K-5-1/4
R385	1	06-11009D19	RESISTOR	750K-5-1/4
R386	1	05-11009C49	RESISTOR	1K-5-1/4
R388	1	05-11009C66	RESISTOR	5.1K-5-1/4
R389	1	05-11009C63	RESISTOR	3.9K-5-1/4
R390	1	05-11009C56	RESISTOR	2K-5-1/4
R391	1	06-11009C59	RESISTOR	2.7K-5-1/4
R392	1	06-11009C58	RESISTOR	2.49K-5-1/4
R393	1	05-10621D28	RESISTOR	23.7K-1-1/4
R394	1	05-10621D80	RESISTOR	82.5K-1-1/4
R395	1	06-11009C73	RESISTOR	10K-5-1/4
R396	1	06-11009D02	RESISTOR	150K-5-1/4
R397	1	06-11009C73	RESISTOR	10K-5-1/4
R398	1	18-80342B96	RESISTOR, VARIABLE	10K

Find No.	Qty. Req.	Part No.	Nomenclature	Part Value
R399	1	05-11009C32	RESISTOR	200-5-1/4
R400	1	05-11009C42	RESISTOR	510-5-1/4
R401	1	05-11009C42	RESISTOR	510-5-1/4
R402	1	05-11009C36	RESISTOR	300-5-1/4
R403	1	05-11009C51	RESISTOR	1.2K-5-1/4
R404	1	05-11009C46	RESISTOR	750-5-1/4
R405	1	05-11009C47	RESISTOR	820-5-1/4
R406	1	05-11009C88	RESISTOR	43K-5-1/4
R407	1	05-11009C55	RESISTOR	5.1K-5-1/4
R408	1	05-11009C66	RESISTOR	5.1K-5-1/4
R409	1	05-10521C95	RESISTOR	11K-1-1/4
R410	1	05-10521C95	RESISTOR	11K-1-1/4
R411	1	05-11009C46	RESISTOR	750-5-1/4
R412	1	05-11009C46	RESISTOR	750-5-1/4
R413	1	05-10521C91	RESISTOR	10K-1-1/4
R414	1	05-10521C91	RESISTOR	10K-1-1/4
R415	1	05-10521C91	RESISTOR	10K-1-1/4
R416	1	05-10621C91	RESISTOR	10K-1-1/4
R417	1	05-10521D76	RESISTOR	75K-1-1/4
R418	1	05-10521D76	RESISTOR	75K-1-1/4
R420	1	05-11009C73	RESISTOR	10K-5-1/4
R421	1	18-80342B98	RESISTOR, VARIABLE	2K
R422	1	05-10621C87	RESISTOR	9.09K-1-1/4
R423	1	05-10521C91	RESISTOR	10K-1-1/4
R424	1	05-11009D04	RESISTOR	180K-5-1/4
R425	1	05-11009C90	RESISTOR	51K-5-1/4
R426	1	05-11009C67	RESISTOR	5.6K-5-1/4
R427	1	05-11009D11	RESISTOR	360K-5-1/4
R428	1	05-11009C56	RESISTOR	2K-5-1/4
R429	1	05-11009C29	RESISTOR	150-5-1/4
R430	1	05-11009C90	RESISTOR	51K-5-1/4
R431	1	05-11009C63	RESISTOR	27K-5-1/4
R432	1	05-11009C80	RESISTOR	200-5-1/4
R433	1	05-11009C55	RESISTOR	5.1K-5-1/4
R434	1	05-11009C37	RESISTOR	330-5-1/4
R435	1	05-00124A61	RESISTOR	3.3K-5-1/4
R436	1	05-10621D27	RESISTOR	23.2K-1-1/4
R437	1	05-10521D32	RESISTOR	26.1K-1-1/4
R438	1	05-11009C63	RESISTOR	27K-5-1/4
R439	1	05-11009C90	RESISTOR	51K-5-1/4
R440	1	05-11009C63	RESISTOR	3.9K-5-1/4
R441	1	05-11009D20	RESISTOR	820K-5-1/4
R442	1	05-11009C55	RESISTOR	2K-5-1/4
R443	1	05-11009C80	RESISTOR	20K-5-1/4
R444	1	05-11009C73	RESISTOR	10K-5-1/4
R445	1	05-11009C23	RESISTOR	82-5-1/4
R447	1	05-11009C23	RESISTOR	82-5-1/4
R448	1	05-00124A73	RESISTOR	10K-5-1/4
R449	1	05-11009C32	RESISTOR	200-5-1/4
R450	1	05-11009C75	RESISTOR	12K-5-1/4
R451	1	05-11009C66	RESISTOR	5.1K-5-1/4
T301	1	25-80342B84	TRANSFORMER	
T302	1	25-80342B78	TRANSFORMER	
T303	1	25-80342B76	TRANSFORMER	
T304	1	25-80342B81	TRANSFORMER	
T305	1	25-80342B76	TRANSFORMER	
U101	1	51-80345A05	INTEGRATED CIRCUIT	HI-201-5 SCREENED
U102	1	51-80345A05	INTEGRATED CIRCUIT	HI-201-5 SCREENED
U103	1	51-80339B99	INTEGRATED CIRCUIT	
U104	1	51-80345A05	INTEGRATED CIRCUIT	HI-201-5 SCREENED
U105	1	51-80345A04	INTEGRATED CIRCUIT	CA3240E SCREENED
U106	1	51-80345A05	INTEGRATED CIRCUIT	HI-201-5 SCREENED
U107	1	51-80345A05	INTEGRATED CIRCUIT	HI-201-5 SCREENED
U108	1	51-80339B99	INTEGRATED CIRCUIT	
U111	1	51-80395A16	INTEGRATED CIRCUIT	LM324N SCREENED
U112	1	51-83627M42	INTEGRATED CIRCUIT	
U113	1	51-83627M42	INTEGRATED CIRCUIT	
U114	1	51-80345A05	INTEGRATED CIRCUIT	HI-201-5 SCREENED
U115	1	51-85469E13	INTEGRATED CIRCUIT	
U201	1	51-83222M02	INTEGRATED CIRCUIT	
U202	1	51-80365A15	INTEGRATED CIRCUIT	
U203	1	51-80365A15	INTEGRATED CIRCUIT	
U204	1	51-80368A65	INTEGRATED CIRCUIT	TL441CN SCREENED
U205	1	51-80345A04	INTEGRATED CIRCUIT	CA3240E SCREENED
U206	1	51-80345A04	INTEGRATED CIRCUIT	CA3240E SCREENED
U207	1	51-80345A04	INTEGRATED CIRCUIT	CA3240E SCREENED
U301	1	51-80340B20	INTEGRATED CIRCUIT	
U302	1	51-83222M02	INTEGRATED CIRCUIT	
U303	1	51-80339B06	INTEGRATED CIRCUIT	
U304	1	51-80345A04	INTEGRATED CIRCUIT	CA3240E SCREENED
U305	1	51-80345A04	INTEGRATED CIRCUIT	CA3240E SCREENED
U306	1	51-80345A04	INTEGRATED CIRCUIT	CA3240E SCREENED
U307	1	51-80365A15	INTEGRATED CIRCUIT	
U308	1	51-80347A38	INTEGRATED CIRCUIT	
U309	1	51-80347A38	INTEGRATED CIRCUIT	
U310	1	51-80340B24	INTEGRATED CIRCUIT	
U311	1	51-05729G02	INTEGRATED CIRCUIT	

Find No.	Qty. Req.	Part No.	Nomenclature	Part Value
U312	1	51-80340B25	INTEGRATED CIRCUIT	
U313	1	51-80339B97	INTEGRATED CIRCUIT	
U314	1	51-80345A04	INTEGRATED CIRCUIT	CA3240E SCREENED
U315	1	51-80345A05	INTEGRATED CIRCUIT	HI-201-5 SCREENED
U316	1	51-80347A38	INTEGRATED CIRCUIT	
U317	1	51-80339B06	INTEGRATED CIRCUIT	
VR201	1	48-83461E36	DIODE	6.2V-5-500MW
VR301	1	48-83461E36	DIODE	6.2V-5-500MW
VR302	1	48-83461E36	DIODE	6.2V-5-500MW
Y201	1	48-80343B32	CRYSTAL	10.24 MHZ

RECEIVER BOARD (A8)

(RTL-1019A)

Figure 10-3b. Printed Wiring Board Assembly and Parts List (Sheet 4 of 4)

10-21/10-22 blank

RF SYNTHESIZER MODULE

60.5-MHz LOOP BOARD (A9A4)

(RTC-4042A)

Figure 11-12. Block Diagram

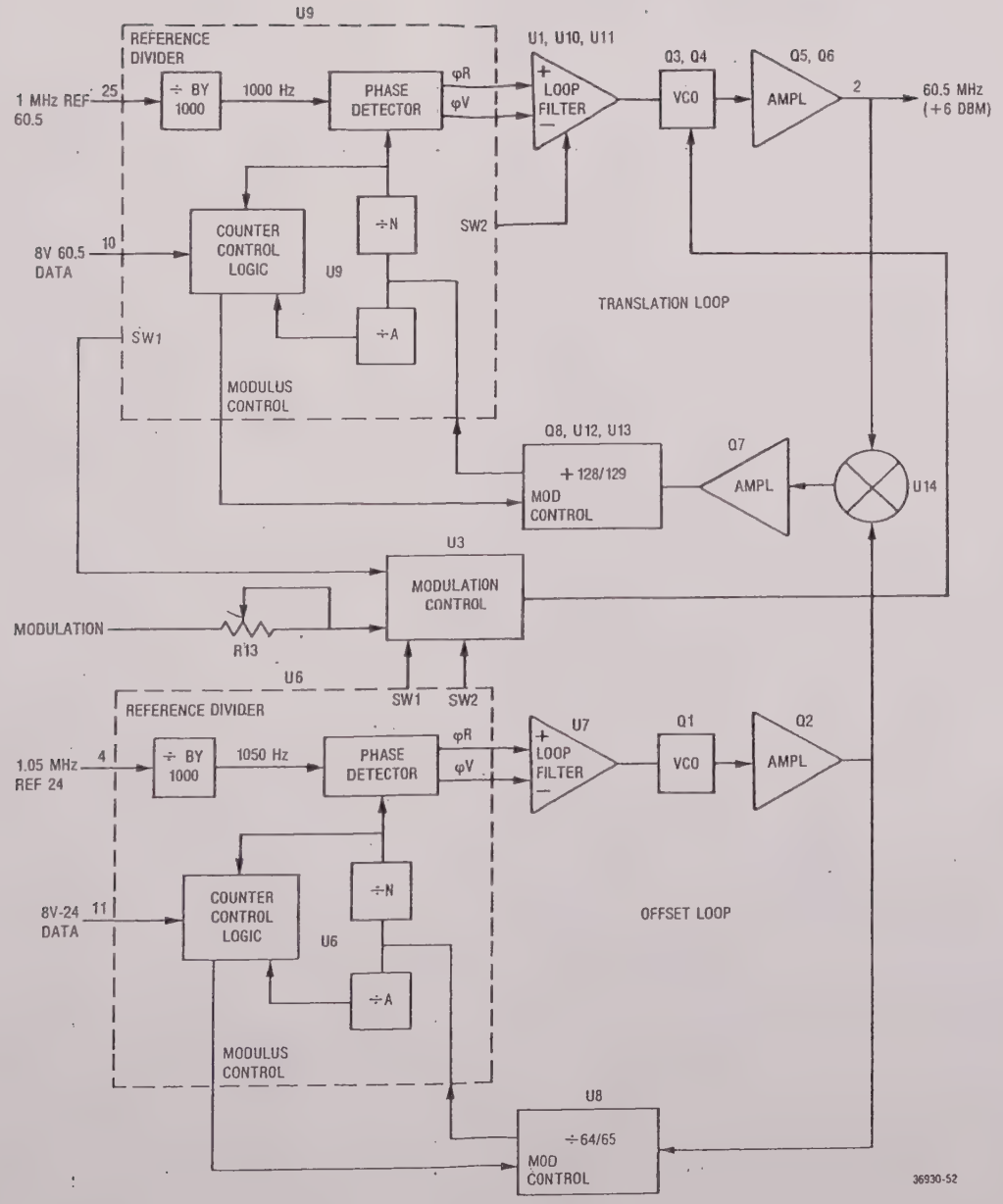

60.5-MHz LOOP BOARD (A9A4)

(RTC-4042A)

Figure 11-13a. Schematic (Sheet 1 of 2)

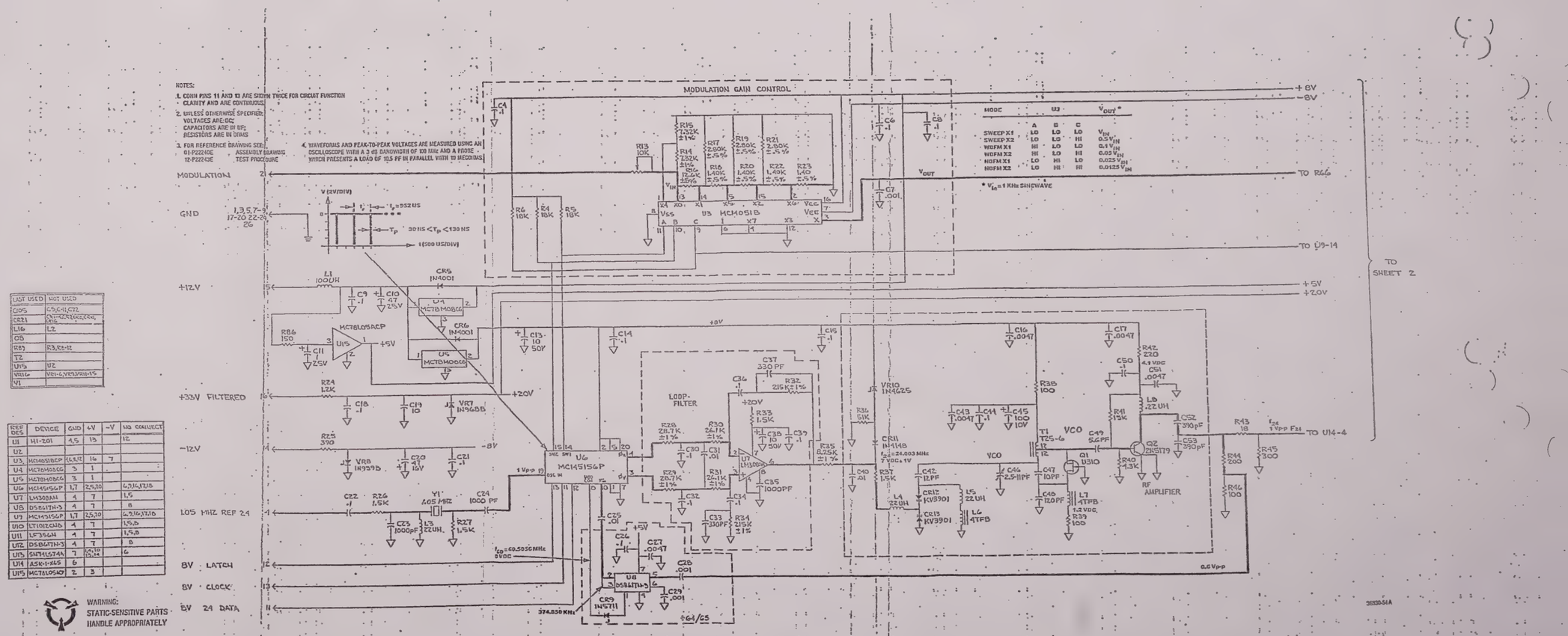

LIST USED	NOT USED
C105	C5,C11,C12,
CR21	CR1-CR3,CR5,CR6, CR15
L16	L2
Q5	
R83	R3,R8-12
T2	
U15	U2
VR16	VR1-6,VR13,VR15
V1	

REF DES	DEVICE	GND	+V	-V	NO CONNECT
U1	H1-201	4,5	15		12
U2					
U3	MC14051BCP	7,8,12	16	7	
U4	MC78M05CG	3	1		
U5	MC78M08CG	3	1		
U6	MC145156P	1,7	2,9,20		4,9,16,17,18
U7	LM308AH	4	7		1,5
U8	DS8617H-3	4	7		8
U9	MC145156P	1,7	2,9,20		4,9,16,17,18
U10	LT1012CJ8	4	7		1,5,8
U11	LF356H	4	7		1,5,8
U12	DS8617H-3	4	7		8
U13	SN74LS74A	7	5,6,10, 13,14		4
U14	ASK-1-245	6			
U15	MC78L05ACP	2	3		

WARNING:
STATIC-SENSITIVE PARTS
HANDLE APPROPRIATELY

RF SYNTHESIZER MODULE
60.5-MHz LOOP BOARD (A9A4)
(RTC-4042A)
Figure 11-13b. Schematic (Sheet 2 of 2)

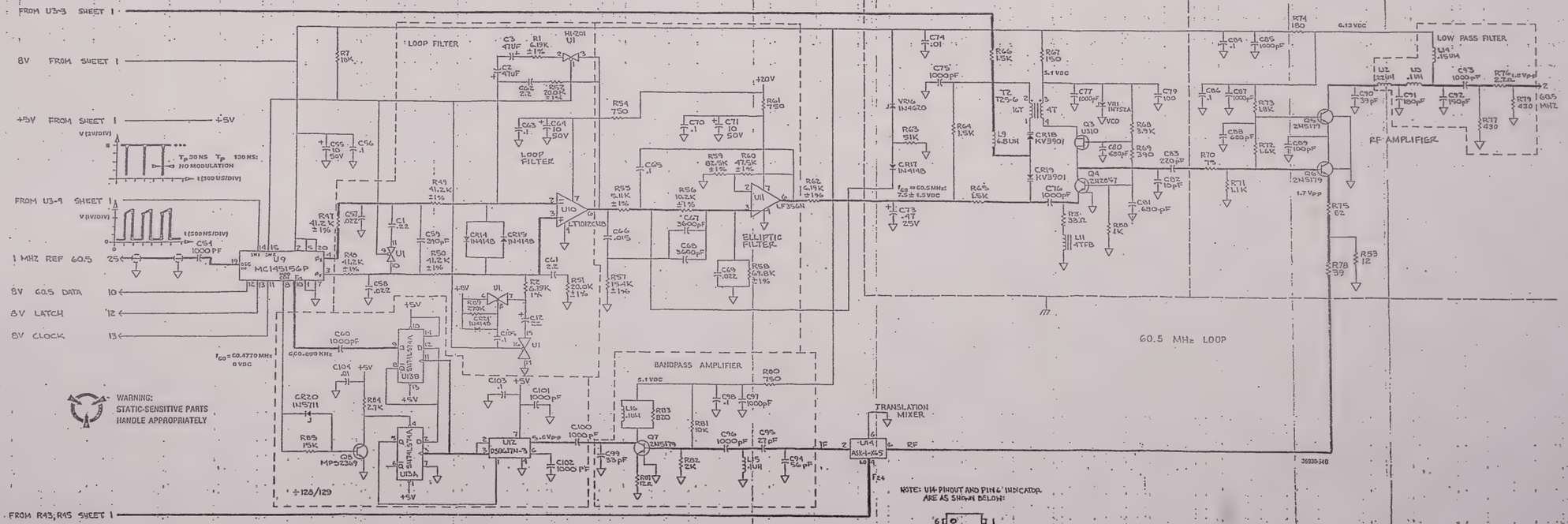

17-23 / 17-24 blank

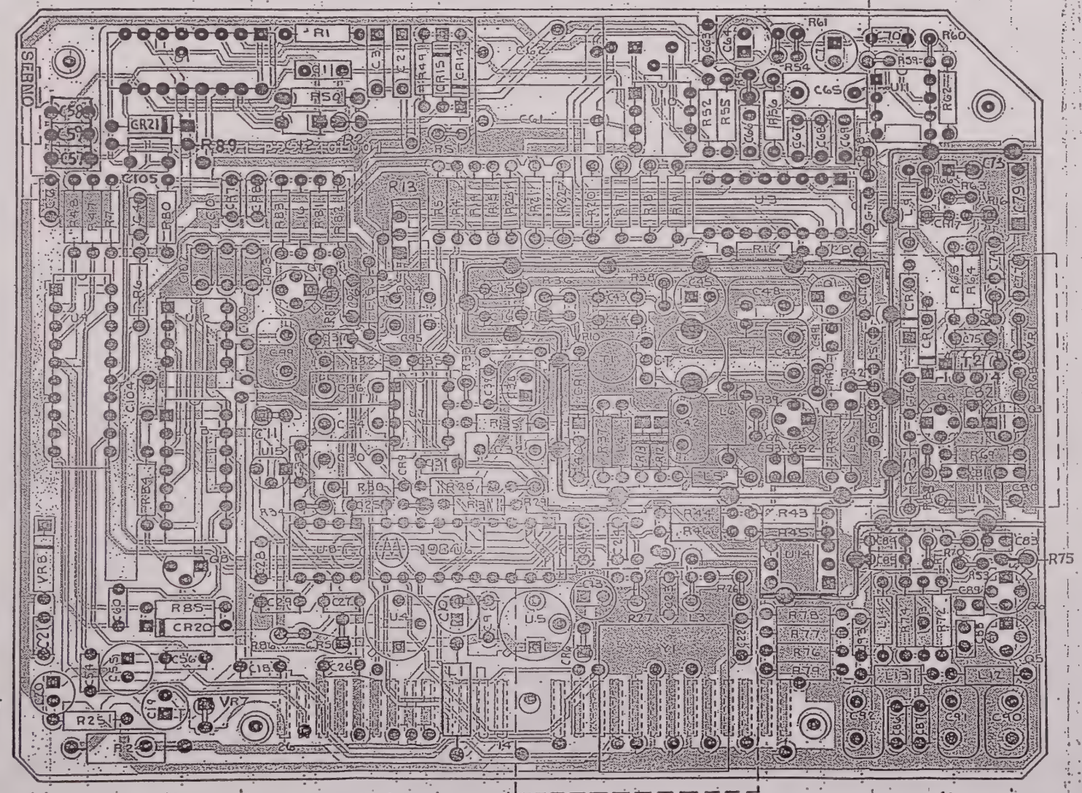

COMPONENTS AND COMPONENT SIDE TRACK SHOWN IN BLACK. SOLDER-SIDE TRACK SHOWN IN ORANGE.

60.5-MHz LOOP BOARD (A9A4)
RTC-4042A

Find No.	Qty. Req.	Part No.	Nomenclature	Part Value
C001	1	21-80342B42	CAPACITOR	.22-10-100
C002	1	23-80340B33	CAPACITOR	47UF-10-20
C003	1	23-80340B33	CAPACITOR	47UF-10-20
C004	1	21-80342B10	CAPACITOR	.1UF-20-50
C006	1	21-80342B10	CAPACITOR	.1UF-20-50
C007	1	21-80341D92	CAPACITOR	1000PF-10-100
C008	1	21-80342B10	CAPACITOR	.1UF-20-50
C009	1	21-80342B10	CAPACITOR	.1UF-20-50
C010	1	23-80341B13	CAPACITOR	47UF-20-25
C011	1	23-80340B96	CAPACITOR	1.0UF-20-25
C012	1	23-80340B36	CAPACITOR	22UF-10-15
C013	1	23-80341B15	CAPACITOR	10UF-20-50
C014	1	21-80342B10	CAPACITOR	.1UF-20-50
C015	1	21-80342B10	CAPACITOR	.1UF-20-50
C016	1	21-80342B05	CAPACITOR	4700PF-20-100
C017	1	21-80342B05	CAPACITOR	4700PF-20-100
C018	1	21-80342B10	CAPACITOR	.1UF-20-50
C019	1	23-80341B15	CAPACITOR	10UF-20-50
C020	1	23-80341B11	CAPACITOR	47UF-20-15
C021	1	21-80342B10	CAPACITOR	.1UF-20-50
C022	1	21-80342B10	CAPACITOR	.1UF-20-50
C023	1	21-80341B46	CAPACITOR	1000PF-5-50
C024	1	21-80341B93	CAPACITOR	1000PF-20-100
C025	1	21-80342B09	CAPACITOR	.01UF-20-50
C026	1	21-80342B10	CAPACITOR	.1UF-20-50
C027	1	21-80342B05	CAPACITOR	4700PF-20-100
C028	1	21-80341B93	CAPACITOR	1000PF-20-100
C029	1	21-80341B93	CAPACITOR	1000PF-20-100
C030	1	08-80343B12	CAPACITOR	.1UF-10-100
C031	1	21-80341B94	CAPACITOR	.01UF-10-100
C032	1	08-80343B12	CAPACITOR	.1UF-10-100
C033	1	21-80341B70	CAPACITOR	330PF-10-50
C034	1	08-80343B12	CAPACITOR	.1UF-10-100
C035	1	21-80341B93	CAPACITOR	1000PF-20-100
C036	1	08-80343B12	CAPACITOR	.1UF-10-100
C037	1	21-80341B70	CAPACITOR	330PF-10-50
C038	1	23-80341B15	CAPACITOR	10UF-20-50
C039	1	21-80342B10	CAPACITOR	.1UF-20-50
C040	1	21-80341B94	CAPACITOR	.01UF-10-100
C042	1	21-80339B12	CAPACITOR	12PF-5-500
C043	1	21-80341B84	CAPACITOR	.0047UF-10-050
C044	1	21-80342B10	CAPACITOR	.1UF-20-50
C045	1	23-80341D07	CAPACITOR	100UF-20-10
C046	1	20-80343B35	CAPACITOR	2.5 TO 11PF-350-NPO
C047	1	21-00853934	CAPACITOR	10PF-.5PF-500
C048	1	21-80339B25	CAPACITOR	120PF-5-500
C049	1	21-80339B82	CAPACITOR	5.6PF-10-200
C050	1	21-80342B10	CAPACITOR	.1UF-20-50
C051	1	21-80342B05	CAPACITOR	4700PF-20-100
C052	1	21-80339B68	CAPACITOR	390PF-5-100
C053	1	21-80339B68	CAPACITOR	390PF-5-100
C054	1	21-80341B93	CAPACITOR	1000PF-20-100
C055	1	23-80341B15	CAPACITOR	10UF-20-50
C056	1	21-80342B10	CAPACITOR	.1UF-20-50
C057	1	21-80342B39	CAPACITOR	.022UF-5-50
C058	1	21-80342B39	CAPACITOR	.022UF-5-50
C059	1	21-80341B79	CAPACITOR	330PF-10-50
C060	1	21-80341B93	CAPACITOR	1000PF-20-100
C061	1	08-80343B16	CAPACITOR	2.2UF-5-100
C062	1	08-80343B16	CAPACITOR	2.2UF-5-100
C063	1	21-80342B10	CAPACITOR	.1UF-20-50
C064	1	23-80341B15	CAPACITOR	10UF-20-50
C065	1	08-80343B12	CAPACITOR	.1UF-10-100
C066	1	21-80342B34	CAPACITOR	.015UF-5-50
C067	1	21-80341B73	CAPACITOR	3600PF-5-50
C068	1	21-80341B73	CAPACITOR	3600PF-5-50
C069	1	21-80342B39	CAPACITOR	.022UF-5-50
C070	1	21-80342B10	CAPACITOR	.1UF-20-50
C071	1	23-80341B15	CAPACITOR	10UF-20-50
C073	1	23-80341B01	CAPACITOR	.47UF-5-25
C074	1	21-80342B09	CAPACITOR	.01UF-20-50
C075	1	21-80341B46	CAPACITOR	1000PF-5-50
C076	1	21-80341B46	CAPACITOR	1000PF-5-50
C077	1	21-80341B46	CAPACITOR	1000PF-5-50
C079	1	23-80340B32	CAPACITOR	100UF-10-20
C080	1	21-80339B69	CAPACITOR	680PF-10-100
C081	1	21-80339B69	CAPACITOR	680PF-10-100
C082	1	21-80339B60	CAPACITOR	10PF-10-200
C083	1	21-80339B61	CAPACITOR	220PF-10-100
C084	1	21-80342B10	CAPACITOR	.1UF-20-50
C085	1	21-80341B93	CAPACITOR	1000PF-20-100

RF SYNTHESIZER MODULE
60.5 MHz LOOP BOARD (A9A4)
(RTC-4042A)

Figure 11-14. Printed Wiring Board Assembly and Parts List

Find No.	Qty. Req.	Part No.	Nomenclature	Part Value
C086	1	21-80342B10	CAPACITOR	.1UF-20-50
C087	1	21-80341B93	CAPACITOR	1000PF-20-100
C088	1	21-80339B69	CAPACITOR	680PF-10-100
C089	1	21-80339B63	CAPACITOR	100PF-10-200
C090	1	21-80339B15	CAPACITOR	39PF-5-500
C091	1	21-80369A95	CAPACITOR	180PF-5-500
C092	1	21-80369A94	CAPACITOR	150PF-5-500
C093	1	21-80341B46	CAPACITOR	1000PF-5-50
C094	1	21-80339B17	CAPACITOR	56PF-5-500
C095	1	21-80369A89	CAPACITOR	27PF-5-500
C096	1	21-80341B46	CAPACITOR	1000PF-5-50
C097	1	21-80341B93	CAPACITOR	1000PF-20-100
C098	1	21-80342B10	CAPACITOR	.1UF-20-50
C099	1	21-80369A90	CAPACITOR	33PF-5-500
C100	1	21-80341B46	CAPACITOR	1000PF-5-50
C101	1	21-80341B93	CAPACITOR	1000PF-20-100
C102	1	21-80341B93	CAPACITOR	1000PF-20-100
C103	1	21-80342B10	CAPACITOR	.1UF-20-50
C104	1	21-80342B09	CAPACITOR	.01UF-20-50
C105	1	21-80342B10	CAPACITOR	.1UF-20-50
CR005	1	48-82466H13	DIODE	
CR006	1	48-82466H13	DIODE	
CR009	1	48-87643C01	DIODE	
CR011	1	48-84463K02	DIODE	
CR012	1	48-80339B95	DIODE	
CR013	1	48-80339B95	DIODE	
CR014	1	48-84463K02	DIODE	
CR015	1	48-84463K02	DIODE	
CR017	1	48-84463K02	DIODE	
CR018	1	48-80339B95	DIODE	
CR019	1	48-80339B95	DIODE	
CR020	1	48-87643C01	DIODE	
CR021	1	48-84463K02	DIODE	
L001	1	24-80369A37	COIL	100UH
L003	1	24-80369A31	COIL	22UH
L004	1	24-80369A31	COIL	22UH
L005	1	24-80369A31	COIL	22UH
L006	1	24-93961B01	CHOKE	
L007	1	24-83961B01	CHOKE	
L008	1	24-80369A25	COIL	.22UH
L009	1	24-80369A28	COIL	6.8UH
L011	1	24-83961B01	CHOKE	
L012	1	24-80369A25	COIL	.22UH
L013	1	24-80369A19	COIL	.1UH
L014	1	24-80369A23	COIL	.15UH
L015	1	24-80369A19	COIL	.1UH
L016	1	24-80369A19	COIL	.1UH
Q001	1	48-00869933	TRANSISTOR	J-FET
Q002	1	48-00869776	TRANSISTOR	
Q003	1	48-00869933	TRANSISTOR	J-FET
Q004	1	48-80342B48	TRANSISTOR	
Q005	1	48-00869776	TRANSISTOR	
Q006	1	48-00869776	TRANSISTOR	
Q007	1	48-00869776	TRANSISTOR	
Q008	1	48-80340B46	TRANSISTOR	
R001	1	06-10621C71	RESISTOR	6190-1-1/4
R002	1	06-10621C71	RESISTOR	6190-1-1/4
R003	1	06-11009C13	RESISTOR	33-5-1/4
R004	1	06-11009C79	RESISTOR	18K-5-1/4
R005	1	06-11009C79	RESISTOR	18K-5-1/4
R006	1	06-11009C79	RESISTOR	18K-5-1/4
R007	1	06-11009C79	RESISTOR	18K-5-1/4
R013	1	18-80343B79	RESISTOR, VARIABLE	10K
R014	1	06-10621C78	RESISTOR	7.32K-1-1/4
R015	1	06-10621C78	RESISTOR	7.32K-1-1/4
R016	1	06-80340B73	RESISTOR	12.6K-5-1/10
R017	1	06-11040C38	RESISTOR	2.80K-5-1/10
R018	1	06-11040C09	RESISTOR	1.40K-5-1/10
R019	1	06-11040C38	RESISTOR	2.80K-5-1/10
R020	1	06-11040C09	RESISTOR	1.40K-5-1/10
R021	1	06-11040C38	RESISTOR	2.80K-5-1/10
R022	1	06-11040C09	RESISTOR	1.40K-5-1/10
R023	1	06-11040C09	RESISTOR	1.40K-5-1/10
R024	1	06-11009C51	RESISTOR	1.2K-5-1/4
R025	1	06-11009C39	RESISTOR	390-5-1/4
R026	1	06-11009C53	RESISTOR	1.5K-5-1/4
R027	1	06-11009C53	RESISTOR	1.5K-5-1/4
R028	1	06-10621D36	RESISTOR	28.7K-1-1/4
R029	1	06-10621D36	RESISTOR	28.7K-1-1/4
R030	1	06-10621D32	RESISTOR	26.1K-1-1/4
R031	1	06-10621D32	RESISTOR	26.1K-1-1/4
R032	1	06-10621E21	RESISTOR	215K-1-1/4
R033	1	06-11009C53	RESISTOR	1.5K-5-1/4
R034	1	06-10621E21	RESISTOR	215K-1-1/4
R035	1	06-10621C83	RESISTOR	8.25K-1-1/4
R036	1	06-11009C90	RESISTOR	51K-5-1/4
R037	1	06-11009C53	RESISTOR	1.5K-5-1/4
R038	1	06-11009C25	RESISTOR	100-5-1/4
R039	1	06-11009C25	RESISTOR	100-5-1/4
R040	1	06-11009C64	RESISTOR	4.3K-5-1/4
R041	1	06-11009C77	RESISTOR	15K-5-1/4
R042	1	06-11009C33	RESISTOR	220-5-1/4
R043	1	06-11009C07	RESISTOR	18-5-1/4
R044	1	06-11009C32	RESISTOR	200-5-1/4
R045	1	06-11009C36	RESISTOR	300-5-1/4
R046	1	06-11009C25	RESISTOR	100-5-1/4
R047	1	06-10621D51	RESISTOR	41.2K-1-1/4
R048	1	06-10621D51	RESISTOR	41.2K-1-1/4
R049	1	06-10621D51	RESISTOR	41.2K-1-1/4
R050	1	06-10621D51	RESISTOR	41.2K-1-1/4
R051	1	06-10621D21	RESISTOR	20K-1-1/4
R052	1	06-10621D21	RESISTOR	20K-1-1/4
R053	1	06-11009C03	RESISTOR	12-5-1/4
R054	1	06-11009C46	RESISTOR	750-5-1/4
R055	1	06-10621C63	RESISTOR	5.11K-1-1/4
R056	1	06-10621C92	RESISTOR	10.2K-1-1/4
R057	1	06-10621D10	RESISTOR	15.4K-1-1/4
R058	1	06-10621D73	RESISTOR	69.8K-1-1/4
R059	1	06-10621D80	RESISTOR	82.5K-1-1/4
R060	1	06-10621D57	RESISTOR	47.5K-1-1/4
R061	1	06-11009C46	RESISTOR	750-5-1/4
R062	1	06-10621C71	RESISTOR	6.19K-1-1/4
R063	1	06-11009C90	RESISTOR	51K-5-1/4
R064	1	06-11009C53	RESISTOR	1.5K-5-1/4
R065	1	06-11009C53	RESISTOR	1.5K-5-1/4
R066	1	06-11009C53	RESISTOR	1.5K-5-1/4
R067	1	06-11009C29	RESISTOR	150-5-1/4
R068	1	06-11009C39	RESISTOR	390-5-1/4
R080	1	06-11009C22	RESISTOR	75-5-1/4
R071	1	06-11009C50	RESISTOR	1.1K-5-1/4
R072	1	06-11009C54	RESISTOR	1.6K-5-1/4
R073	1	06-11009C55	RTESISTOR	1.8K-5-1/4
R074	1	06-11009C31	RESISTOR	180-5-1/4
R075	1	06-11009A20	RESISTOR	62-5-1/4
R076	1	5043CX2R7003	RESISTOR	2.7-5-1/4
R077	1	06-00124A40	RESISTOR	430-5-1/4
R078	1	06-11009C15	RESISTOR	39-5-1/4
R079	1	06-00124A40	RESISTOR	430-5-1/4
R080	1	06-11009C46	RESISTOR	750-5-1/4
R081	1	06-11009C73	RESISTOR	10K-5-1/4
R082	1	06-11009C56	RESISTOR	2K-5-1/4
R083	1	06-11009C47	RESISTOR	820-5-1/4
R084	1	06-11009C59	RESISTOR	2.7K-5-1/4
R085	1	06-11009C77	RESISTOR	15K-5-1/4
R086	1	06-11009C29	RESISTOR	150-5-1/4
R087	1	06-11009C03	RESISTOR	12-5-1/4
R088	1	06-11009C49	RESISTOR	1K-5-1/4
R089	1	06-11009D08	RESISTOR	270K-5-1/4
T001	1	25-80342B77	TRANSFORMER	
T002	1	25-80342B80	TRANSFORMER	
U001	1	51-80345A05	INTEGRATED CIRCUIT	HI-201-5 SCREENED
U003	1	51-05596E06	INTEGRATED CIRCUIT	
U004	1	51-05698H01	INTEGRATED CIRCUIT	
U005	1	51-05698H01	INTEGRATED CIRCUIT	
U006	1	51-83625M62	INTEGRATED CIRCUIT	
U007	1	51-80365A27	INTEGRATED CIRCUIT	
U008	1	51-80339B82	INTEGRATED CIRCUIT	
U009	1	51-83625M62	INTEGRATED CIRCUIT	
U010	1	51-80340B07	INTEGRATED CIRCUIT	
U011	1	51-80372B67	INTEGRATED CIRCUIT	LF356, SCREENED
U012	1	51-80339B82	INTEGRATED CIRCUIT	
U013	1	51-83627M93	INTEGRATED CIRCUIT	
U014	1	51-80372B84	MIXER	
U015	1	51-05469E01	INTEGRATED CIRCUIT	
VR001	1	IN752A	DIODE, ZENER	5.6V-5-1/2
VR007	1	48-82256C39	DIODE, ZENER	20V-5-1/2
VR008	1	48-83461E32	DIODE, ZENER	8.2V-5-.5
VR010	1	48-82256C15	DIODE, ZENER	5.1V-5-1/4
VR016	1	48-83461E03	DIODE, ZENER	3.3V-5-1/4
Y001	1	91-80342B86	FILTER	1.05 MHz

Figure 11-15. Block Diagram

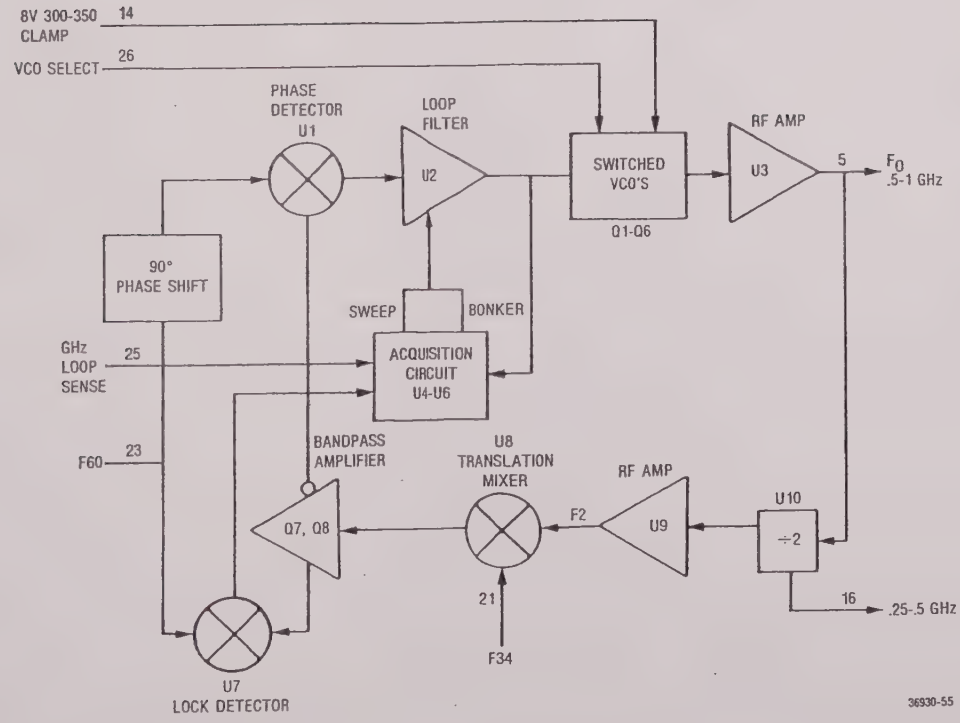

Figure 11-16. Schematic

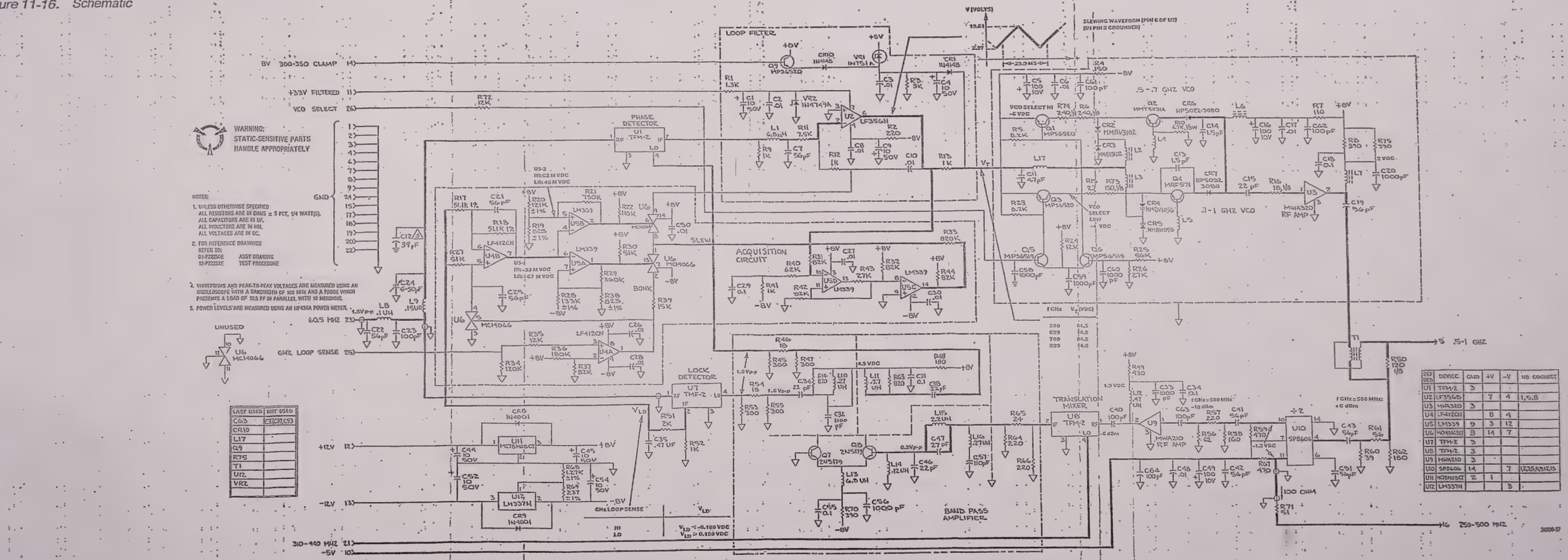

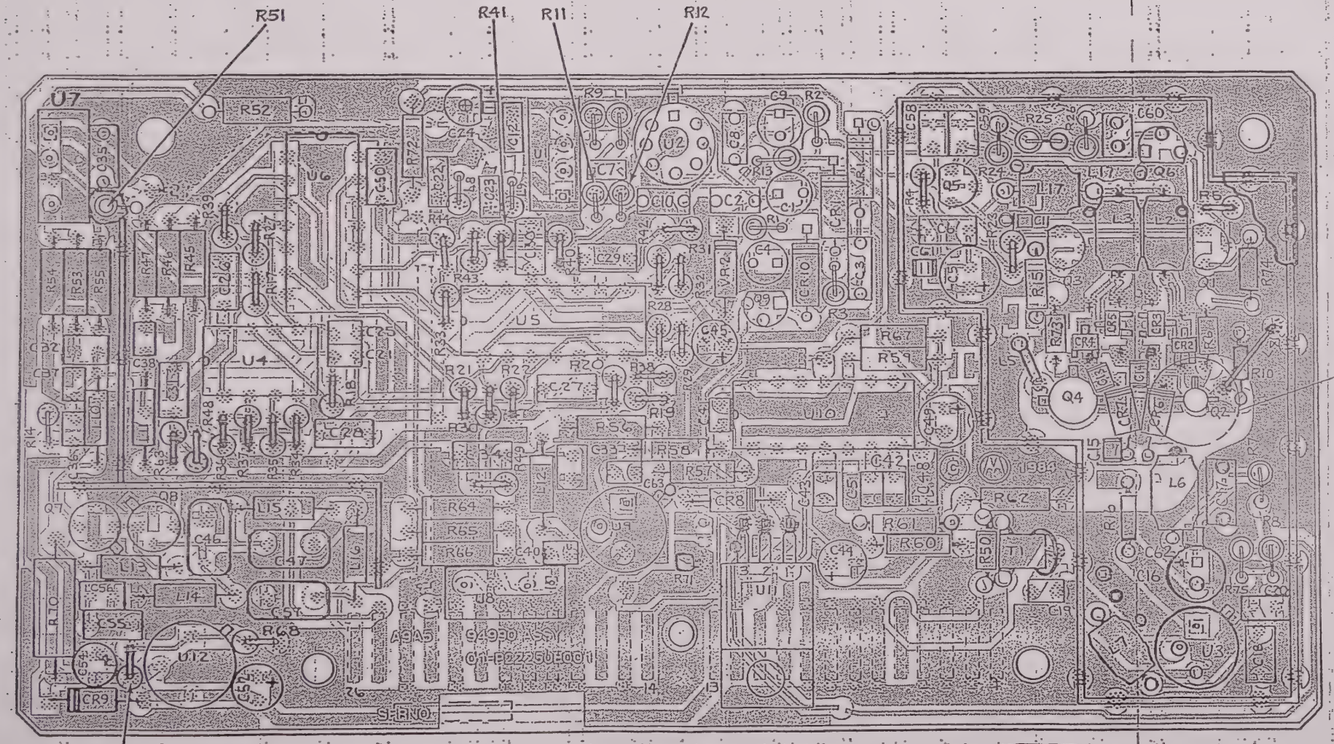

COMPONENTS AND COMPONENT SIDE TRACK SHOWN IN BLACK. SOLDER-SIDE TRACK SHOWN IN ORANGE.

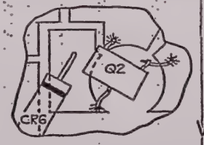

VIEW A

GHz LOOP BOARD (A9A5) RTC-4043A

Find No.	Qty. Req.	Part No.	Nomenclature	Part Value
006	1	30-80344B03	CABLE,JUMPER NO.1	
007	1	30-80344B04	CABLE,JUMPER NO.2	
008	1	30-80344B05	CABLE,JUMPER NO.3	
C001	1	23-80341B15	CAPACITOR	10UF-20-50
C002	1	21-80342B09	CAPACITOR	.01UF-20-50
C003	1	21-80342B09	CAPACITOR	.01UF-20-50
C004	1	23-80341B15	CAPACITOR	10UF-20-50
C005	1	23-80341B07	CAPACITOR	100UF-20-10
C006	1	21-80342B09	CAPACITOR	.01UF-20-50
C007	1	21-80339B67	CAPACITOR	56PF-10-200
C008	1	21-80342B09	CAPACITOR	.01UF-20-50
C009	1	23-80341B15	CAPACITOR	10UF-20-50
C010	1	21-80369A89	CAPACITOR	.01UF-10-100
C011	1	21-80370A19	CAPACITOR	4.7PF-.5PF-100
C012	1	21-80372B70	CAPACITOR	33PF-10-200
C012	S01	21-80344B28	CAPACITOR	47PF-5-100
C012	S01	21-80344B30	CAPACITOR	68PF-5-100
C012	S01	21-80344B31	CAPACITOR	82PF-5-100
C013	1	21-80370A09	CAPACITOR	1.5PF-.5PF-100
C014	1	21-80370A09	CAPACITOR	1.5PF-.5PF-100
C015	1	21-80370A14	CAPACITOR	22PF-5-100
C016	1	23-80341B07	CAPACITOR	100UF-20-10
C017	1	21-80342B09	CAPACITOR	.01UF-20-50
C018	1	21-80342B10	CAPACITOR	.1UF-20-50
C019	1	21-80339B67	CAPACITOR	56PF-10-200
C020	1	21-80339B72	CAPACITOR	.001UF-10-200
C021	1	21-80339B67	CAPACITOR	56PF-10-200
C022	1	21-80339B67	CAPACITOR	56PF-10-200
C023	1	21-80339B63	CAPACITOR	100PF-10-200
C024	1	19-80372B83	CAPACITOR	6-50PF VAR
C025	1	21-80339B67	CAPACITOR	56PF-10-200
C026	1	21-80342B09	CAPACITOR	.01UF-20-50
C027	1	21-80342B09	CAPACITOR	.01UF-20-50
C028	1	21-80342B09	CAPACITOR	.01UF-20-50
C029	1	21-80342B10	CAPACITOR	.1UF-20-50
C030	1	21-80342B09	CAPACITOR	.01UF-20-50
C031	1	21-80342B10	CAPACITOR	.1UF-20-50
C032	1	21-80339B72	CAPACITOR	.001UF-10-200
C033	1	21-80339B72	CAPACITOR	.001UF-10-200
C034	1	21-80342B10	CAPACITOR	.1UF-20-50
C035	1	21-80372B65	CAPACITOR	.47UF-10-100
C036	1	21-80344B32	CAPACITOR	22PF-5-200
C037	1	21-80339B68	CAPACITOR	68PF-10-200
C038	1	21-80344B32	CAPACITOR	22PF-5-200
C039	1	21-80339B68	CAPACITOR	68PF-10-200
C040	1	21-80339B63	CAPACITOR	100PF-10-200
C041	1	21-80339B67	CAPACITOR	56PF-10-200
C042	1	21-80339B67	CAPACITOR	56PF-10-200
C043	1	21-80339B67	CAPACITOR	56PF-10-200
C044	1	23-80341B15	CAPACITOR	10UF-20-50
C045	1	23-80341B15	CAPACITOR	10UF-20-50
C046	1	21-80369A88	CAPACITOR	22PF-5-500
C047	1	21-80369A89	CAPACITOR	27PF-5-500
C048	1	21-80342B09	CAPACITOR	.01UF-20-50
C049	1	23-80341B07	CAPACITOR	100UF-20-10
C050	1	21-80342B09	CAPACITOR	.01UF-20-50
C051	1	21-80339B67	CAPACITOR	56PF-10-200
C052	1	23-80341B15	CAPACITOR	10UF-20-50
C054	1	23-80341B15	CAPACITOR	10UF-20-50
C055	1	21-80342B10	CAPACITOR	.1UF-20-50
C056	1	21-80339B72	CAPACITOR	.001UF-10-200
C057	1	21-80339B24	CAPACITOR	110PF-5-500
C058	1	21-80339B72	CAPACITOR	.001UF-10-200
C059	1	21-80339B72	CAPACITOR	.001UF-10-200
C060	1	21-80339B72	CAPACITOR	.001UF-10-200
C061	1	21-80370A21	CAPACITOR	100PF-20-100
C062	1	21-80370A21	CAPACITOR	100PF-20-100
C063	1	21-80339B63	CAPACITOR	100PF-10-200
C064	1	21-80370A21	CAPACITOR	100PF-20-100
CR001	1	48-84453K02	DIODE	
CR002	1	48-80372B76	DIODE	
CR003	1	48-80372B76	DIODE	
CR004	1	48-80372B77	DIODE	
CR005	1	48-80372B77	DIODE	
CR006	1	48-80339B87	DIODE	
CR007	1	48-80339B87	DIODE	
CR008	1	48-82466H13	DIODE	
CR009	1	48-82466H13	DIODE	
CR010	1	48-84453K02	DIODE	
L001	1	24-80369A28	COIL	6.8UH
L002	1	24-83951B01	CHOKE	
L003	1	24-83951B01	CHOKE	
L004	1	24-80342B73	COIL	
L005	1	24-80342B72	COIL	

RF SYNTHESIZER MODULE

GHz LOOP BOARD (A9A5)

(RTC-4043A)

Figure 11-17a. Printed Wiring Board Assembly and Parts List

GHz LOOP BOARD (A9A5)
(RTC-4043A)

Figure 11-17b. Printed Wiring Board Assembly and Parts List

Find No.	Qty. Req.	Part No.	Nomenclature	Part Value
L006	1	24-83361B01	CHOKE	
L007	1	24-83361B01	CHOKE	
L008	1	24-80339A19	COIL	.1UH
L009	1	24-80339A23	COIL	.15UH
L010	1	24-80340B51	COIL	.27UH
L011	1	24-80340B51	COIL	.27UH
L012	1	24-80339A27	COIL	.47UH
L013	1	24-80339A28	COIL	5.6UH
L014	1	24-80340B50	COIL	.12UH
L015	1	24-80339A32	COIL	2.2UH
L016	1	24-80340B51	COIL	.27UH
L017	1	24-83361B01	CHOKE	
Q001	1	48-80340B86	TRANSISTOR	MPS6520
Q002	1	48-80372B75	TRANSISTOR	
Q003	1	48-80340B86	TRANSISTOR	MPS6520
Q004	1	48-80340B48	TRANSISTOR	
Q005	1	48-80340B85	TRANSISTOR	MPS6519
Q006	1	48-80340B85	TRANSISTOR	MPS6519
Q007	1	48-00869776	TRANSISTOR	
Q008	1	48-00869776	TRANSISTOR	
Q009	1	48-80340B86	TRANSISTOR	MPS6520
R001	1	05-11009C52	RESISTOR	1.3K-5-1/4
R002	1	05-11009C33	RESISTOR	220-5-1/4
R003	1	05-11009C60	RESISTOR	3K-5-1/4
R004	1	05-11009C29	RESISTOR	150-5-1/4
R005	1	05-11009C71	RESISTOR	8.2K-5-1/4
R006	1	05-11041C50	RESISTOR	240-5-1/8
R007	1	05-11009C26	RESISTOR	110-5-1/4
R008	1	05-11009C39	RESISTOR	390-5-1/4
R009	1	05-11009C49	RESISTOR	1K-5-1/4
R010	1	05-00185A65	RESISTOR	4.7K-5-1/8
R011	1	05-11009C70	RESISTOR	7.5K-5-1/4
R012	1	05-00124A49	RESISTOR	1K-5-1/4
R013	1	05-11009C49	RESISTOR	1K-5-1/4
R014	1	05-00124A47	RESISTOR	820-5-1/4
R015	1	05-11041A03	RESISTOR	2.7-5-1/8
R016	1	05-11041A23	RESISTOR	18-5-1/8
R017	1	05-10521D60	RESISTOR	51.1K-1-1/4
R018	1	05-10521D60	RESISTOR	51.1K-1-1/4
R019	1	05-10521B86	RESISTOR	825-1-1/4
R020	1	05-10521C39	RESISTOR	121K-1-1/4
R021	1	05-11009D19	RESISTOR	750K-5-1/4
R022	1	05-11009C98	RESISTOR	110K-5-1/4
R023	1	05-11009C71	RESISTOR	8.2K-5-1/4
R024	1	05-11009C75	RESISTOR	12K-5-1/4
R025	1	05-11009C91	RESISTOR	56K-5-1/4
R026	1	05-11009C83	RESISTOR	27K-5-1/4
R027	1	05-11009C89	RESISTOR	51K-5-1/4
R028	1	05-10521E01	RESISTOR	133K-1-1/4
R029	1	05-11009D11	RESISTOR	360K-5-1/4
R030	1	05-11009C90	RESISTOR	51K-5-1/4
R031	1	05-11009C85	RESISTOR	82K-5-1/4
R032	1	05-11009C85	RESISTOR	82K-5-1/4
R033	1	05-11009D20	RESISTOR	820K-5-1/4
R034	1	05-11009C99	RESISTOR	120K-5-1/4
R035	1	05-11009C75	RESISTOR	12K-5-1/4
R036	1	05-11009D04	RESISTOR	180K-5-1/4
R037	1	05-11009C95	RESISTOR	82K-5-1/4
R038	1	05-10521B85	RESISTOR	825-1-1/4
R039	1	05-11009C77	RESISTOR	15K-5-1/4
R040	1	05-11009C92	RESISTOR	62K-5-1/4
R041	1	05-11009C49	RESISTOR	1K-5-1/4
R042	1	05-11009C95	RESISTOR	82K-5-1/4
R043	1	05-11009C83	RESISTOR	27K-5-1/4
R044	1	05-11009C85	RESISTOR	82K-5-1/4
R045	1	05-11009C36	RESISTOR	300-5-1/4
R046	1	05-11009C07	RESISTOR	18-5-1/4
R047	1	05-11009C36	RESISTOR	300-5-1/4
R048	1	05-11009C31	RESISTOR	180-5-1/4
R049	1	05-11009C40	RESISTOR	430-5-1/4
R050	1	05-11041C43	RESISTOR	120-5-1/8
R051	1	05-11009C05	RESISTOR	22K-5-1/4
R052	1	05-11009C49	RESISTOR	1K-5-1/4
R053	1	05-11009C36	RESISTOR	300-5-1/4
R054	1	05-11009C07	RESISTOR	18-5-1/4
R055	1	05-11009C36	RESISTOR	300-5-1/4
R056	1	05-00124A20	RESISTOR	62-5-1/4
R057	1	05-00124A33	RESISTOR	220-5-1/4
R058	1	05-00124A30	RESISTOR	160-5-1/4
R059	1	05-11009C41	RESISTOR	470-5-1/4
R060	1	05-11009C15	RESISTOR	39-5-1/4

Find No.	Qty. Req.	Part No.	Nomenclature	Part Value
R061	1	05-11009C19	RESISTOR	56-5-1/4
R062	1	05-11009C31	RESISTOR	180-5-1/4
R063	1	05-00124A47	RESISTOR	820-5-1/4
R064	1	05-00124A33	RESISTOR	220-5-1/4
R065	1	05-00124A10	RESISTOR	24-5-1/4
R066	1	05-00124A33	RESISTOR	220-5-1/4
R067	1	05-11009C41	RESISTOR	470-5-1/4
R068	1	05-10521C05	RESISTOR	1.27K-1-1/4
R069	1	05-10521B34	RESISTOR	237-1-1/4
R070	1	05-11045A39	RESISTOR	330-5-1/2
R071	1	05-80372B74	RESISTOR	50-5-1
R072	1	05-11009C75	RESISTOR	12K-5-1/4
R073	1	05-00185A29	RESISTOR	150-5-1/8
R074	1	05-11041C39	RESISTOR	240-5-1/8
R075	1	05-11009C39	RESISTOR	390-5-1/4
T001	1	25-80342B53	TRANSFORMER ASSY	2T #32 ON 3B BEAD
001	1	74-15169A01	BEAD	
U001	1	51-80346A05	MIXER	
U002	1	51-80339B95	INTEGRATED CIRCUIT	
U003	1	51-80340B64	INTEGRATED CIRCUIT	
U004	1	51-80339B91	INTEGRATED CIRCUIT	
U005	1	51-83629M71	INTEGRATED CIRCUIT	
U006	1	51-82884L71	INTEGRATED CIRCUIT	
U007	1	51-80346A05	MIXER	
U008	1	51-80346A05	MIXER	
U009	1	51-80346A54	INTEGRATED CIRCUIT	
U010	1	51-80340B90	INTEGRATED CIRCUIT	
U011	1	51-05292H02	INTEGRATED CIRCUIT	
U012	1	51-80340B04	INTEGRATED CIRCUIT	
VR001	1	48-82256C51	DIODE,ZENER	5.1V-5-.5
VR002	1	RG-1N4749A	DIODE,ZENER	24V-5-1

T001 Transformer Assembly 25-80342B53

001	1	74-15169A01	BEAD	

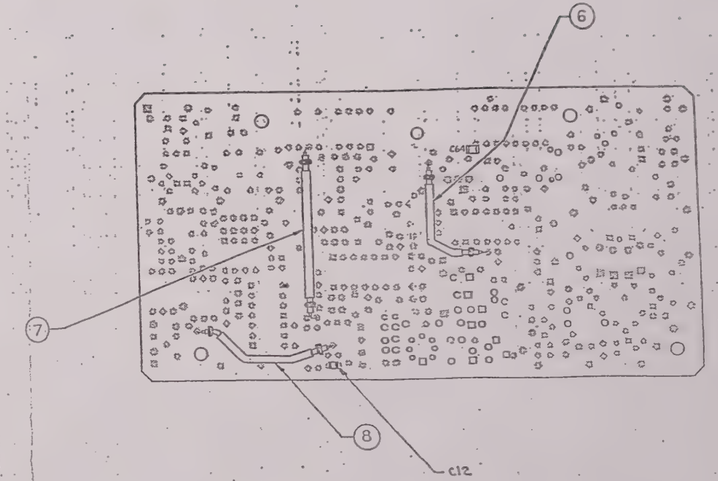

RF SYNTHESIZER MODULE

640-MHz LOOP BOARD (A9A6)

(RTC-4044A)

Figure 11-18. Block Diagram

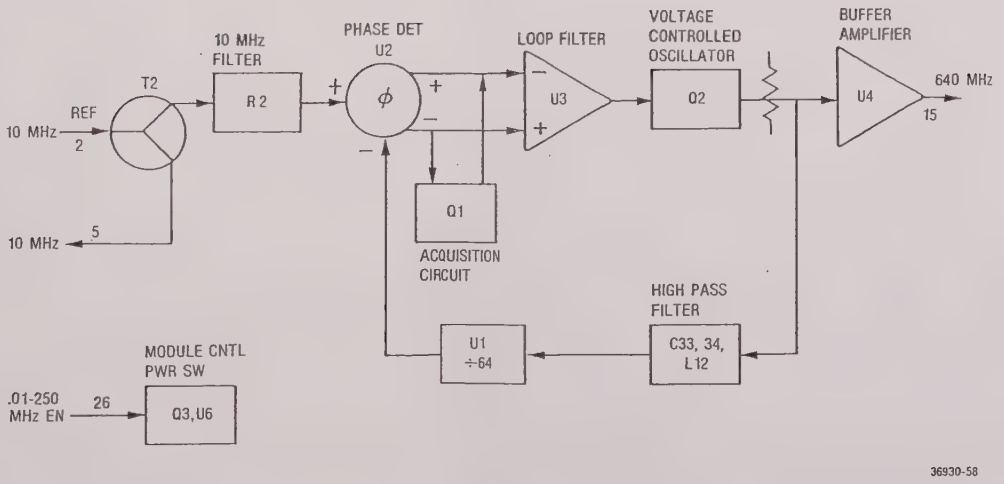

RF SYNTHESIZER MODULE
640-MHz LOOP BOARD (A9A6)
(RTC-4044A)

Figure 11-19. Schematic

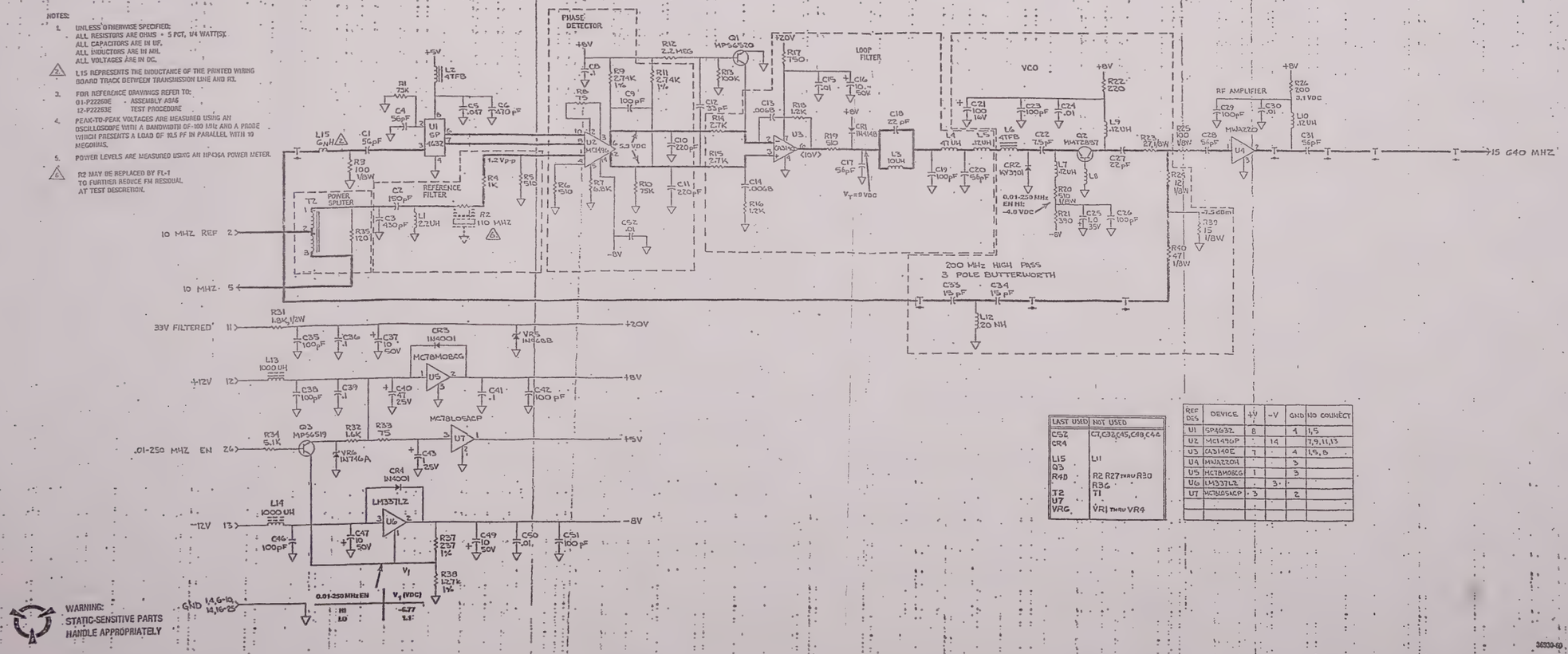

LAST USED	NOT USED
C52	C7,C32,C45,C48,C66
CR4	
L15	L11
Q3	
R40	R2 R27 THRU R30
	R36
T2	T1
U7	
VR6	VR1 THRU VR4

REF DES	DEVICE	+V	-V	GND	NO CONNECT
U1	SP4632	8		4	1,5
U2	MC1496P		14		7,9,11,13
U3	CA3140E	7		4	1,5,6
U4	MWA220H			3	
U5	MC78M08CG	1		3	
U6	LM337LZ		3	1	
U7	MC78L05ACP	3		2	

640-MHz LOOP BOARD (A9A6) (Cont)

RTC-4044A

Find No.	Qty. Req.	Part No.	Nomenclature	Part Value
R 016	1	06-11009C51	RESISTOR	1.2K-5-1/4
R 017	1	06-11009C46	RESISTOR	750-5-1/4
R 018	1	06-11009C51	RESISTOR	1.2K-5-1/4
R 019	1	06-11009C42	RESISTOR	510-5-1/4
R 020	1	06-11041C58	RESISTOR	510-5-1/8
R 021	1	06-11009C39	RESISTORS	390-5-1/4
R 022	1	06-11009C33	RESISTOR	220-5-1/4
R 023	1	06-11041C27	RESISTOR	27-5-1/8
R 024	1	06-11041A19	RESISTOR	12-5-1/8
R 025	1	06-11041C41	RESISTOR	100-5-1/8
R 026	1	06-11009C32	RESISTOR	200-5-1/4
R 031	1	06-11045A55	RESISTOR	1.8K-5-1/2
R 032	1	06-11009C54	RESISTOR	1.6K-5-1/4
R 033	1	06-11009C22	RESISTOR	75-5-1/4
R 034	1	06-11009C66	RESISTOR	5.1K-5-1/4
R 035	1	06-11009C27	RESISTOR	120-5-1/4
R 037	1	06-10621B34	RESISTOR	237-1-1/4
R 038	1	06-10621C05	RESISTOR	1.27K-1-1/4
R 039	1	06-11041A21	RESISTOR	15-5-1/8
R 040	1	06-11041A33	RESISTOR	47-5-1/8
T 002	1	25-80342B75	TRANSFORMER	
U 001	1	51-80340B89	INTEGRATED CIRCUIT	
U 002	1	51-83222M02	INTEGRATED CIRCUIT	
U 003	1	51-80345A01	INTEGRATED CIRCUIT	CA3140E SCREENED
U 004	1	51-80340B62	INTEGRATED CIRCUIT	
U 005	1	51-05698H01	INTEGRATED CIRCUIT	
U 006	1	51-80340B05	INTEGRATED CIRCUIT	
U 007	1	51-05469E01	INTEGRATED CIRCUIT	
VR005	1	48-82256C39	DIODE,ZENER	20V-5-1/2
VR006	1	48-83461E03	DIODE,ZENER	3.3V-5-.5

Figure 11-20. Printed Wiring Board Assembly and Parts List

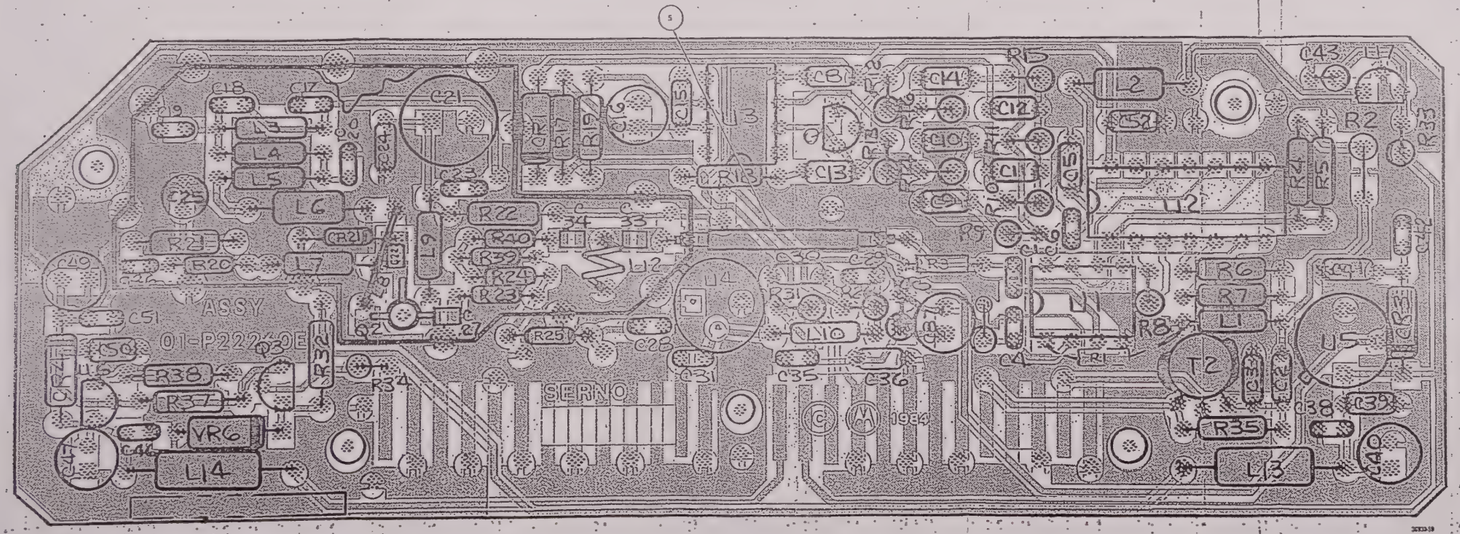

COMPONENTS AND COMPONENT SIDE TRACK SHOWN IN BLACK. SOLDER-SIDE TRACK SHOWN IN ORANGE

640-MHz LOOP BOARD (A9A6)
RTC-4044A

Find No.	Qty. Req.	Part No.	Nomenclature	Part Value
005	1	30-80343B95	JUMPER,COAX	
C 001	1	21-80339B67	CAPACITOR	56PF-10-200
C 002	1	21-80341B54	CAPACITOR	150PF-5-50
C 003	1	21-80341B60	CAPACITOR	430PF-5-50
C 004	1	21-80339B67	CAPACITOR	56PF-10-200
C 005	1	21-80342B13	CAPACITOR	.047UF-20-50
C 006	1	21-80335B79	CAPACITOR	470PF-10-200
C 008	1	21-80342B10	CAPACITOR	.1UF-20-50
C 009	1	21-80341B45	CAPACITOR	100PF-5-50
C 010	1	21-80341B60	CAPACITOR	220PF-5-50
C 011	1	21-80341B60	CAPACITOR	220PF-5-50
C 012	1	21-80341B68	CAPACITOR	33PF-5-50
C 013	1	21-80342B08	CAPACITOR	.0068UF-10-100
C 014	1	21-80342B08	CAPACITOR	.0068UF-10-100
C 015	1	21-80342B09	CAPACITOR	.01UF-20-50
C 016	1	23-80341B15	CAPACITOR	10UF-20-50
C 017	1	21-80339B67	CAPACITOR	56PF-10-200
C 018	1	21-80341B32	CAPACITOR	22PF-5-100
C 019	1	21-80339B63	CAPACITOR	100PF-10-200
C 020	1	21-80339B67	CAPACITOR	56PF-10-200
C 021	1	23-84665F26	CAPACITOR	100UF-20-15
C 022	1	21-80341B44	CAPACITOR	7.5PF-.5-100
C 023	1	21-80339B63	CAPACITOR	100PF-10-200
C 024	1	21-80342B09	CAPACITOR	.01UF-20-50
C 025	1	23-80341B15	CAPACITOR	10UF-20-50
C 026	1	21-80339B63	CAPACITOR	100PF-10-200
C 027	1	21-80370A14	CAPACITOR	22PF-5-100
C 029	1	21-80339B67	CAPACITOR	56PF-10-200
C 029	1	21-80339B63	CAPACITOR	100PF-10-200
C 030	1	21-80342B09	CAPACITOR	.01UF-20-50
C 031	1	21-80339B67	CAPACITOR	56PF-10-200
C 033	1	21-80370A12	CAPACITOR	15PF-5-100
C 034	1	21-80370A12	CAPACITOR	15PF-5-100
C 035	1	21-80339B63	CAPACITOR	100PF-10-200
C 036	1	21-80342B10	CAPACITOR	.1UF-10-50
C 037	1	23-80341B15	CAPACITOR	10UF-20-50
C 038	1	21-80339B63	CAPACITOR	100PF-10-200
C 039	1	21-80342B10	CAPACITOR	.1UF-20-50
C 040	1	23-80341B13	CAPACITOR	47UF-20-25
C 041	1	21-80342B10	CAPACITOR	.1UF-20-50
C 042	1	21-80339B63	CAPACITOR	100PF-10-200
C 043	1	23-80340B53	CAPACITOR	1.0UF-20-25
C 045	1	21-80339B63	CAPACITOR	100PF-10-200
C 047	1	23-80341B15	CAPACITOR	10UF-20-50
C 049	1	23-80341B15	CAPACITOR	10UF-20-50
C 050	1	21-80342B09	CAPACITOR	.01UF-20-50
C 051	1	21-80339B63	CAPACITOR	100PF-10-200
C 052	1	21-80342B09	CAPACITOR	.01UF-20-50
CR001	1	48-84453B02	DIODE	
CR002	1	48-80339B95	DIODE	
CR003	1	48-82466H13	DIODE	
CR004	1	48-82466H13	DIODE	
FL001	1	48-80346A08	CRYSTAL FILTER	10MHZ-2-POLE
*L001	1	24-80369A32	COIL	2.2UH
L 002	1	24-83961B01	CHOKE	
L 003	1	24-80369A29	COIL	10UH
L 004	1	24-80369A33	COIL	47UH
L 005	1	24-80340B50	COIL	.12UH
L 006	1	24-83961B01	CHOKE	
L 007	1	24-80340B50	COIL	.12UH
L 008	1	24-80342B71	COIL	
L 009	1	24-80340B50	COIL	.12UH
L 010	1	24-80340B50	COIL	.12UH
L 012	1	24-80342B55	COIL	
L 013	1	24-80369A42	COIL	1000UH
L 014	1	24-80369A42	COIL	1000UH
Q 001	1	48-80340B85	TRANSISTOR	MPS6520
Q 002	1	48-00869824	TRANSISTOR	
Q 003	1	48-80340B85	TRANSISTOR	MPS6519
* R002	1	5043CX1K0005	RESISTOR	1K-S-1/4
R 003	1	05-11041C41	RESISTOR	100-S-1/8
R 004	1	05-11009C49	RESISTOR	1K-S-1/4
R 005	1	05-11009C42	RESISTOR	510-S-1/4
R 006	1	05-11009C42	RESISTOR	510-S-1/4
R 007	1	05-11009C69	RESISTOR	6.8K-S-1/4
R 008	1	05-11009C22	RESISTOR	75-S-1/4
R 009	1	05-10521C37	RESISTOR	2.74K-1-1/4
R 010	1	05-11009C34	RESISTOR	75K-S-1/4
R 011	1	05-10521C37	RESISTOR	2.74K-1-1/4
R 012	1	05-80344B24	RESISTOR	2.2M-S-1/4
R 013	1	05-11009C37	RESISTOR	100K-S-1/4
R 014	1	05-11009C59	RESISTOR	2.7K-S-1/4
R 015	1	05-11009C59	RESISTOR	2.7K-S-1/4

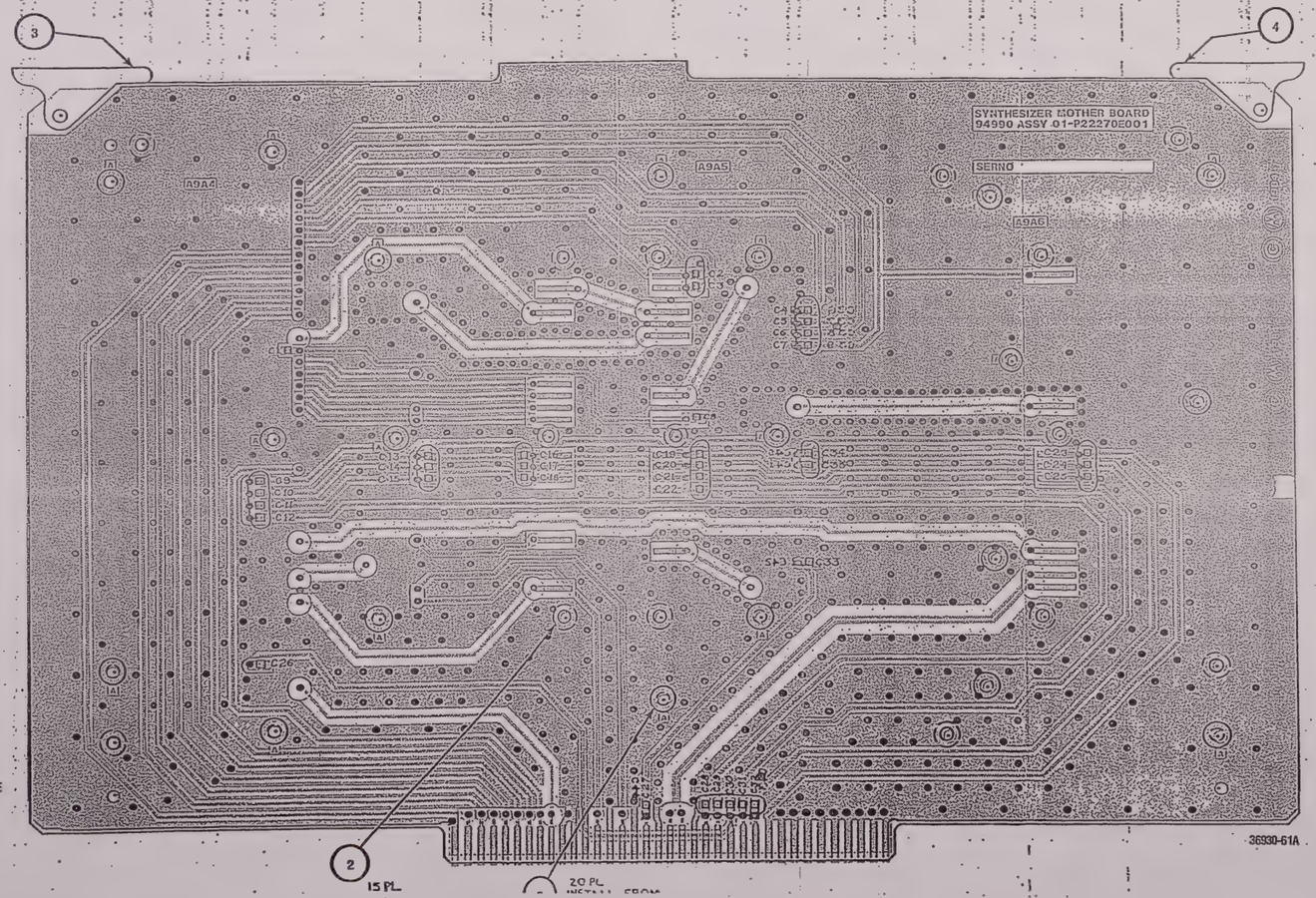

COMPONENTS AND FRONT SIDE OF BOARD SHOWN IN BLACK. INNER LAYER OF BOARD SHOWN IN ORANGE.

1135

SYNTHESIZER MOTHERBOARD (A9A7)
RTC-4045A

Find No.	Qty. Req.	Part No.	Nomenclature	Part Value
C001	1	21-80342B42	CAPACITOR	.22-10-100
C002	1	23-80340B33	CAPACITOR	47UF-10-20
C003	1	23-80340B33	CAPACITOR	47UF-10-20
C004	1	21-80342B10	CAPACITOR	.1UF-20-50
C006	1	21-80342B10	CAPACITOR	.1UF-20-50
C007	1	21-80341B92	CAPACITOR	1000PF-10-100
C008	1	21-80342B10	CAPACITOR	.1UF-20-50
C009	1	21-80342B10	CAPACITOR	.1UF-20-50
C010	1	23-80341B15	CAPACITOR	47UF-20-25
C011	1	23-80340B36	CAPACITOR	1.0UF-20-25
C012	1	23-80340B35	CAPACITOR	22UF-10-15
C013	1	23-80341B15	CAPACITOR	10UF-20-50
C014	1	21-80342B10	CAPACITOR	.1UF-20-50
C015	1	21-80342B10	CAPACITOR	.1UF-20-50
C016	1	21-80342B06	CAPACITOR	4700PF-20-100
C017	1	21-80342B06	CAPACITOR	4700PF-20-100
C018	1	21-80342B10	CAPACITOR	.1UF-20-50
C019	1	23-80341B15	CAPACITOR	10UF-20-50
C020	1	23-80341B11	CAPACITOR	47UF-20-16
C021	1	21-80342B10	CAPACITOR	.1UF-20-50
C022	1	21-80342B10	CAPACITOR	.1UF-20-50
C023	1	21-80341B45	CAPACITOR	1000PF-5-50
C024	1	21-80341B93	CAPACITOR	1000PF-20-100
C025	1	21-80342B09	CAPACITOR	.01UF-20-50
C026	1	21-80342B10	CAPACITOR	.1UF-20-50
C027	1	21-80342B06	CAPACITOR	4700PF-20-100
C028	1	21-80341B93	CAPACITOR	1000PF-20-100
C029	1	21-80341B93	CAPACITOR	1000PF-20-100
C030	1	08-80343B12	CAPACITOR	1UF-10-100
C031	1	21-80341B94	CAPACITOR	.01UF-20-100
C032	1	08-80343B12	CAPACITOR	.1UF-10-100
C033	1	21-80341B70	CAPACITOR	330PF-10-50
C034	1	08-80343B12	CAPACITOR	.1UF-10-100
C035	1	21-80341B93	CAPACITOR	1000PF-20-100
C036	1	08-80343B12	CAPACITOR	.1UF-10-100
C037	1	21-80341B70	CAPACITOR	330PF-10-50
C038	1	23-80341B15	CAPACITOR	10UF-20-50
C039	1	21-80342B10	CAPACITOR	.1UF-20-50
C040	1	21-80341B94	CAPACITOR	.01UF-10-100
C042	1	21-80339B12	CAPACITOR	12PF-5-500
C043	1	21-80341B94	CAPACITOR	.0047UF-10-030
C044	1	21-80342B10	CAPACITOR	.1UF-20-50
C045	1	23-80341B07	CAPACITOR	100UF-20-10
C046	1	20-80343B30	CAPACITOR	2.5 TO 11PF-350-NPO
C047	1	21-80859334	CAPACITOR	10PF-.5PF-500
C048	1	21-80339B25	CAPACITOR	120PF-5-500
C049	1	21-80339B62	CAPACITOR	5.6PF-10-200
C050	1	21-80342B10	CAPACITOR	.1UF-20-50
C051	1	21-80342B06	CAPACITOR	4700PF-20-100
C052	1	21-80339B66	CAPACITOR	390PF-5-100
C053	1	23-80341B15	CAPACITOR	10UF-20-50
C056	1	21-80342B10	CAPACITOR	.1UF-20-50
C057	1	21-80342B39	CAPACITOR	.022UF-5-50
C058	1	21-80342B39	CAPACITOR	.022UF-5-50
C059	1	21-80341B79	CAPACITOR	390PF-10-50
C060	1	21-80341B93	CAPACITOR	1000PF-20-100
C061	1	08-80343B16	CAPACITOR	2.2UF-5-100
C062	1	08-80343B16	CAPACITOR	2.2UF-5-100
C063	1	21-80342B10	CAPACITOR	.1UF-20-50
C064	1	23-80341B15	CAPACITOR	10UF-20-50
C065	1	08-80343B12	CAPACITOR	.1UF-10-100
C066	1	21-80342B34	CAPACITOR	.015UF-5-50
C067	1	21-80341B73	CAPACITOR	3600PF-5-50
C068	1	21-80341B73	CAPACITOR	3600PF-5-50
C069	1	21-80342B39	CAPACITOR	.022UF-5-50
C070	1	21-80342B10	CAPACITOR	.1UF-20-50
C071	1	23-80341B15	CAPACITOR	10UF-20-50
C073	1	23-80341B01	CAPACITOR	.47UF-5-25
C074	1	21-80342B09	CAPACITOR	.01UF-20-50
C075	1	21-80341B46	CAPACITOR	1000PF-5-50
C076	1	21-80341B46	CAPACITOR	1000PF-5-50
C077	1	21-80341B46	CAPACITOR	1000PF-5-50
C079	1	23-80340B32	CAPACITOR	100UF-10-20
C080	1	21-80339B69	CAPACITOR	680PF-10-100
C081	1	21-80339B69	CAPACITOR	680PF-10-100
C082	1	21-80339B60	CAPACITOR	10PF-10-200
C083	1	21-80339B61	CAPACITOR	220PF-10-100
C084	1	21-80342B10	CAPACITOR	.1UF-20-50
C085	1	21-80341B93	CAPACITOR	1000PF-20-100

RF SYNTHESIZER
SYNTHESIZER MOTHERBOARD (A9A7)
(RTC-4045A)

Figure 11-21a. Printed Wiring Board Assembly and Parts List (Sheet 1 of 2)

SECTION 12.
AUDIO SYNTHESIZER BOARD (A10)

12.1 DESCRIPTION

The Audio Synthesizer board generates and processes baseband signals, providing the composite modulating signal for RF-signal generation. The A10 board consists of an Audio Synthesizer that generates frequencies in the range of 5 to 19999.9 Hz, a digital private line (DPL) generator, and a fixed 1-kHz source. The A10 board provides external microphone and external audio inputs, and sums all modulation sources to form the composite modulation source.

A block diagram of the Audio Synthesizer board is shown at the end of this section in Figure 12-1, a schematic in Figure 12-2, and the printed wiring board assembly and parts list in Figure 12-3.

12.2 THEORY OF OPERATION

12.2.1 AUDIO SYNTHESIZER

12.2.1.1 General

Audio frequencies from 5 to 19999.9 Hz, in increments of 0.1 Hz, are synthesized using a phase-accumulative technique. Consider the 360 degrees in a cycle to be divided into 2^{20} pieces. A 20-bit digital accumulator, incrementing at some fixed rate, could then at any instant represent a fixed point in the 360-degree cycle. That is, if the accumulator were half full, it would represent the 180-degree point, and if totally full, would represent the 360-degree point. The number of times per second that the accumulator goes through a complete cycle determines the output frequency. If the increment rate is fixed, the time required to accumulate 2^{20} bits can be varied by changing the number of bits added at each time increment.

12.2.1.2 Clock Generator

The 104.8576-kHz clock generator (U6 and U7) provides the increment rate for the Audio Synthesizer. If only one bit were added each time, the time to complete one cycle would be 10 seconds. Processor-loaded control latches U40-U44 determine the number of bits to be added at each time increment and, thus, the final output frequency. A 20-bit adder (U26-U30) adds the control word to the current word in the 20-bit accumulator latch (U14-U18). At the next time increment, the adder output is latched, becoming the next input to the adder.

12.2.1.3 Digital-To-Analog Conversion

The linear digital output of the 20-bit latch accumulator is converted into a sinusoidal digital output by the decode EPROM (U11). Following the decode EPROM is a digital-to-analog converter (U3) which converts the sinusoidal information into a quantized sinewave with a period equal to the cycle time of the 20-bit accumulator latch.

12.2.1.4 Bandpass Filter

Bandpass filter U1 and U2, with a passband of 5 to 10 kHz, filters the quantized waveform to a sinewave having less than 1 percent distortion. The level of the sinewave is processor-controllable by a programmable attenuator (U23C and U23D) having dB settings of 0, 10, and 30.

12.2.2 DPL GENERATOR

12.2.2.1 General

The 23-bit digital private line (DPL) word is generated by the processor from the 3-digit code. The 23-bit word is then transferred to a serial shift register and clocked out at a rate of 133 Hz. Connecting the output of the shift register back to its input causes the 23-bit word to be continuously repeated.

12.2.2.2 Shift Register

There are two modes to the DPL generator. During the load mode, the shift-register control (U34 and U36) gates a control latch to the input of the shift register (U20 and U3). Twenty-three data bits and clock pulses are then provided by the processor to load the DPL word. At the completion of the load mode, the shift-register control switches back to the output mode, which cycles the DPL word through the shift register at a 133-Hz clock rate. The 133-Hz clock comes from one of the sinusoidal digital lines on the Audio Synthesizer (U4 PIN 15).

12.2.2.3 Bandpass Filter

Bandpass filter U8, with a 0.2 to 135-Hz bandpass, follows the shift-register output to remove the higher frequency components of the digital signal. For the DPL off-code (133-Hz tone), the processor switches the INT MOD line to the Audio Synthesizer's output, outputting a 133-Hz sinewave.

12.2.3 1-KHz TONE

A filtered, 1-kHz square wave provides the fixed, 1-kHz modulation source. The SYNTH 1 KHz signal from the Processor Interface board (A11) is filtered to less than 1 percent distortion by bandpass filter U46.

12.2.4 INTERNAL MODULATION

The internally generated modulation consists of the output of either the audio synthesizer or the DPL generator.

12.2.5 EXTERNAL MODULATION

External modulation can come from either the microphone input or the external modulation input port (Ext Mod In) on the front panel. An instantaneous deviation-control (IDC) circuit (U45) amplifies and limits the microphone signal (MIC IN) before summing it with the signal EXT MOD IN from the front panel's port. The resulting signal is the EXT MOD source.

12.2.6 MODULATION CONTROL

The three modulation sources, internal, external, and 1-kHz, are level-controlled by either the front panel controls or the IEEE Interface board (A13). The level-adjusted sources are then returned to the Audio Synthesizer board, where they are summed together and dc-adjusted by U38 for 0 Vdc, forming the composite modulation audio. The composite signal is routed to four places: the modulation-select switch, the MOD CAL AUDIO line to the Scope/DVM Control board (A7), the F.P. MOD OUTPUT line to the front panel, and VOL CONTROL AUDIO line to the speaker (for generate modes only).

The modulation-select switch (U24) routes the composite modulation signal to any of the four modulators: to the double sideband-suppressed carrier modulator (DSBSC MOD) for sideband modulation, to the RF Synthesizer for frequency modulation (FM MOD), to the Duplex Generator for frequency modulation (OFFSET MOD), and to the RF output-leveling loop for amplitude modulation. U47 sums the signal for amplitude modulation with a 5-Vdc level and then routes it to the variable RF Level control on the front panel (5 VDC + AM MOD). At the RF Level control, the signal is attenuated according to the level setting to give the dc-plus-AM reference signal for the output-leveling loop.

12.2.7 BOARD CONTROL

The AF bus provides all the control inputs for the Audio Synthesizer board. The 4-bit address bus (AF ADD BUS 0-3) is decoded by the address decoder (U35) to determine which control latch is to be accessed. Control data is transferred to the accessed latch on the 4-bit data bus (AF DATA BUS 0-3). Synchronization of the data transfer is the function of the AF BUS EN 1 signal line.

Figure 11-21b. Printed Wiring Board Assembly and Parts List (Sheet 2 of 2)

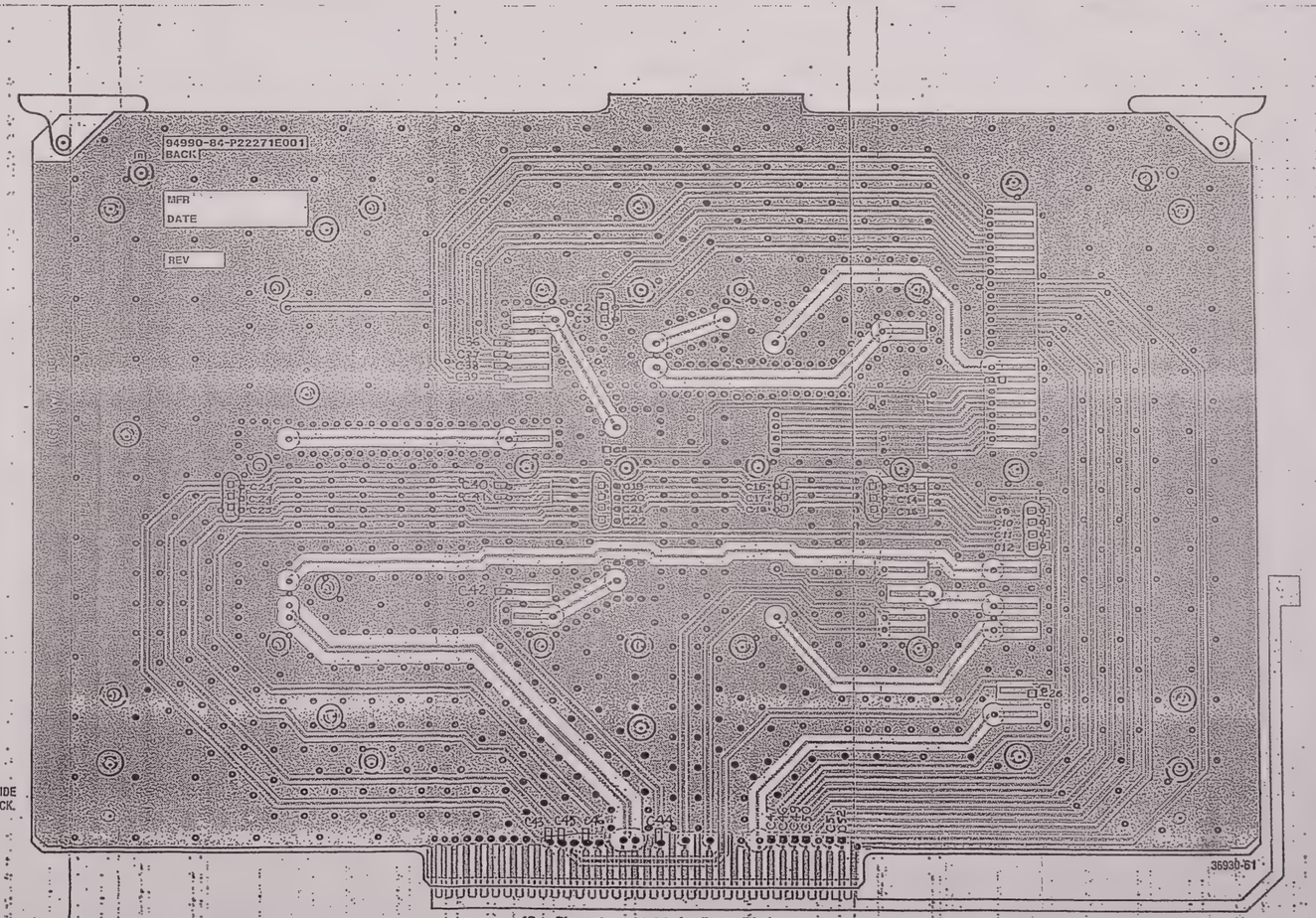

COMPONENTS AND BACKSIDE OF BOARD SHOWN IN BLACK. INNER LAYER OF BOARD SHOWN IN ORANGE

(See Sheet 1, p. 11-35, for Parts List)

Figure 12-1. Block Diagram

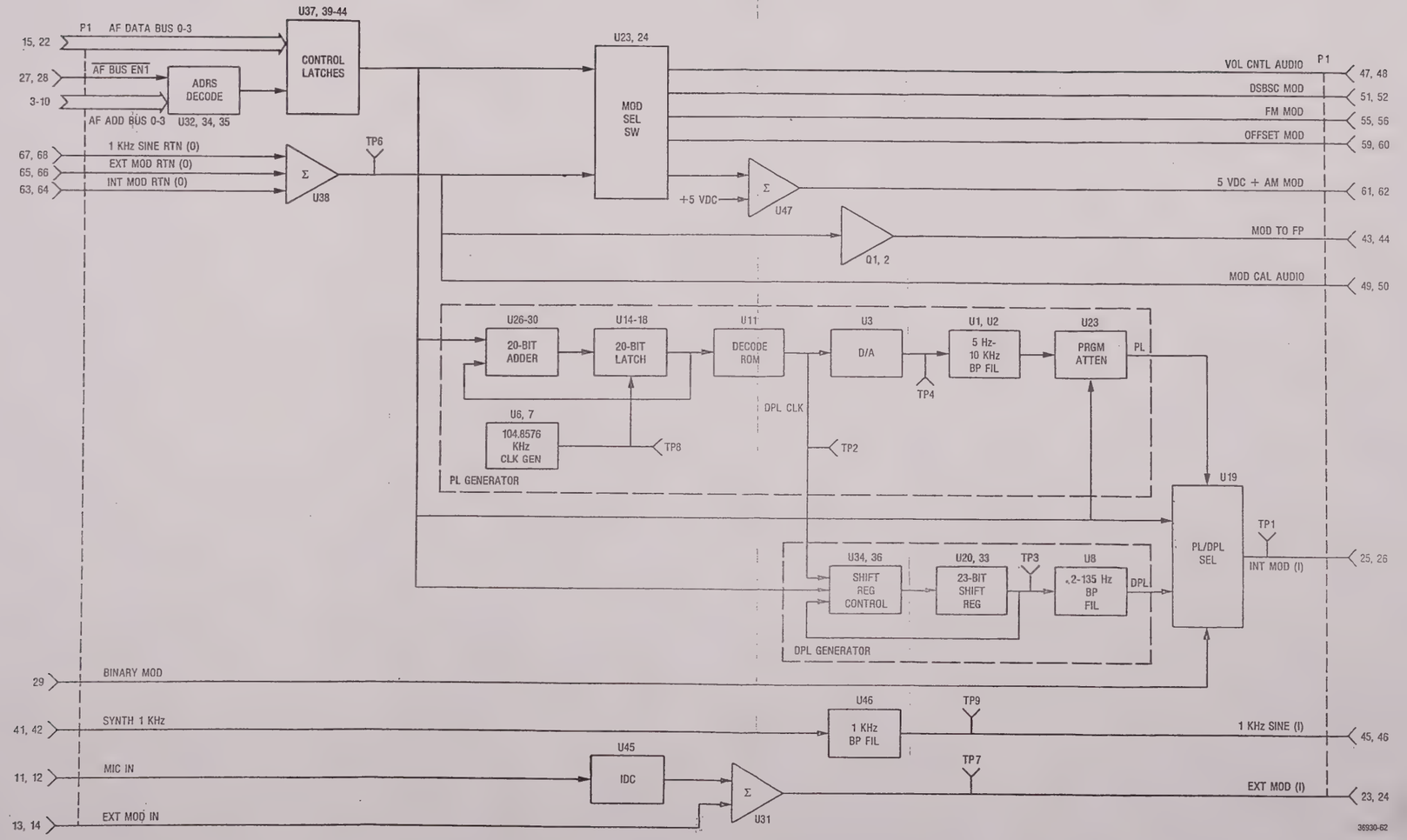

AUDIO SYNTHESIZER BOARD (A10)

(RTC-1008A)

Figure 12-2a. Schematic (Sheet 1 of 3)

NOTES:

1. PARTIAL REFERENCE DESIGNATIONS ARE SHOWN. FOR COMPLETE DESIGNATIONS PREFIX WITH 1AA.
2. FOR REFERENCE DRAWINGS REFER TO ASSY. NO. 01-P0026N.
3. UNLESS OTHERWISE SPECIFIED:
   ALL RESISTORS ARE IN OHMS ± 5% PCT, 1/4 WATT(S).
   ALL CAPACITORS ARE IN UF.
   ALL INDUCTORS ARE IN UH.
   ALL VOLTAGES ARE IN DC.

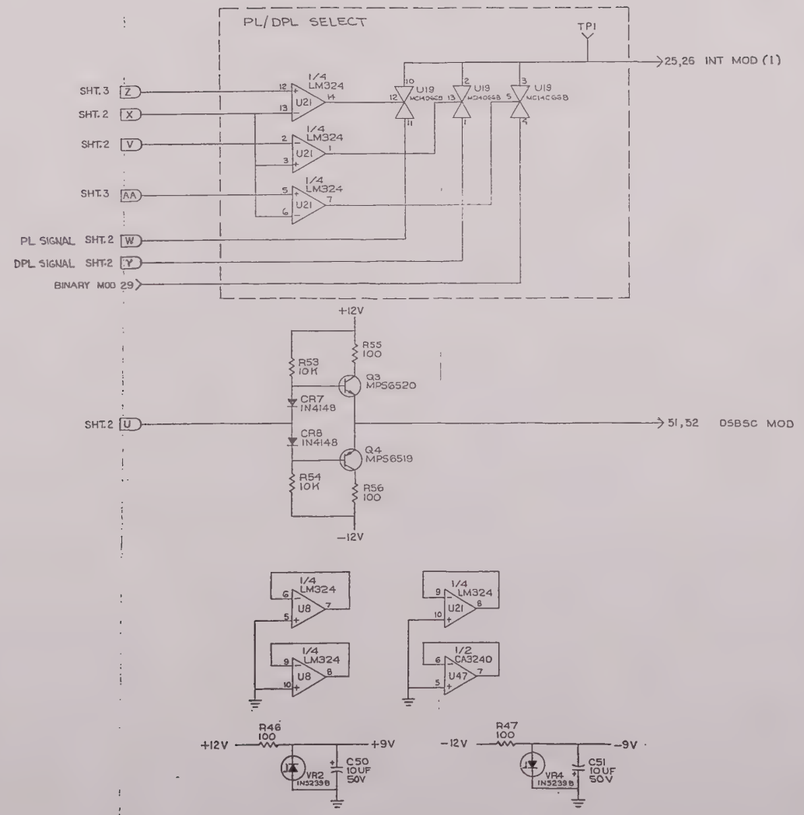

REF DES	DEVICE TYPE	GND	+5V	−5V	+12V	−12V	NO CONN
U1	CA3240E	3			8	4	
U2	CA3240E	5			8	4	
U3	MC1408P8	1,2	13			3,16	
U4	MC14175BCP	8	16				3,6,11,14
U5	MC14175BCP	8	16				3,6,11,14
U6	SN74LS90N	2,3,6,7,10	5				4,8,9,13
U7	SN74LS04N	7	14,9,11				8,10
U8	MLM324N	5,10	4	11			
U9							
U10							
U11	MM2716Q	12,18,20	21,24				
U12							
U13							
U14	MC14175BCP	8	16				3,6,11,14
U15	MC14175BCP	8	16				3,6,11,14
U16	MC14175BCP	8	16				3,6,11,14
U17	MC14175BCP	8	16				3,6,11,14
U18	MC14175BCP	8	16				3,6,11,14
U19	MC14066BCP		14	6,7			8,9
U20	MC14006BCP	7	14				1,2,5,6,8,9,10,11,13
U21	MLM324N	10	4	11			
U22	LM324N						14, +9/4, -9/11
U23	MC14066BCP	9,10					1,2,+9,14-9/7,13
U24	MC14066BCP						+9V/14, -9V/7
U25	LM324N						+9/4, -9/11
U26	MC14008BCP	8	16				
U27	MC14008BCP	1,3,8	16				14
U28	MC14008BCP	8	16				
U29	MC14008BCP	8	16				
U30	MC14008BCP	8,9	16				
U31	CA3140E	3			7	4	5,8
U32	MC14011BCP	1,2,5,7	14				3,4,6
U33	MC14006BCP	7	14				2,8,11
U34	MC14011BCP	7	1,2,14				3
U35	MC14028BCP	8	16				5,9
U36	MC14011BCP	7	14				
U37	MC14042BCP	8	16				3,9,12,15
U38	CA3240E	5			8	4	
U39	MC14042BCP	8	16				3,9,12,15
U40	MC14042BCP	8	16				3,9,12,15
U41	MC14042BCP	8	16				3,9,15
U42	MC14042BCP	8	16				3,9,12,15
U43	MC14042BCP	8	16				3,9,12,15
U44	MC14042BCP	8	16				3,9,12,15
U45	IDC	3					2
U46	CA3240E	3,5			8	4	
U47	CA3240E	5			8	4	
U48	MC14042BCP	8	16				2,3,9,10,11,12,15

LAST USED	NOT USED
C61	C46, C58
CR8	CR1,CR2,CR3,CR4
L3	
Q5	
R68	R12,R18,R20,R21,R22,R44,R63
U48	U9,U10, U12, U13
VR9	VR3,VR5,VR6,VR7,VR8
Y1	

WARNING:
STATIC-SENSITIVE PARTS
HANDLE APPROPRIATELY

36930-64A

Figure 12-2b. Schematic (Sheet 2 of 3)

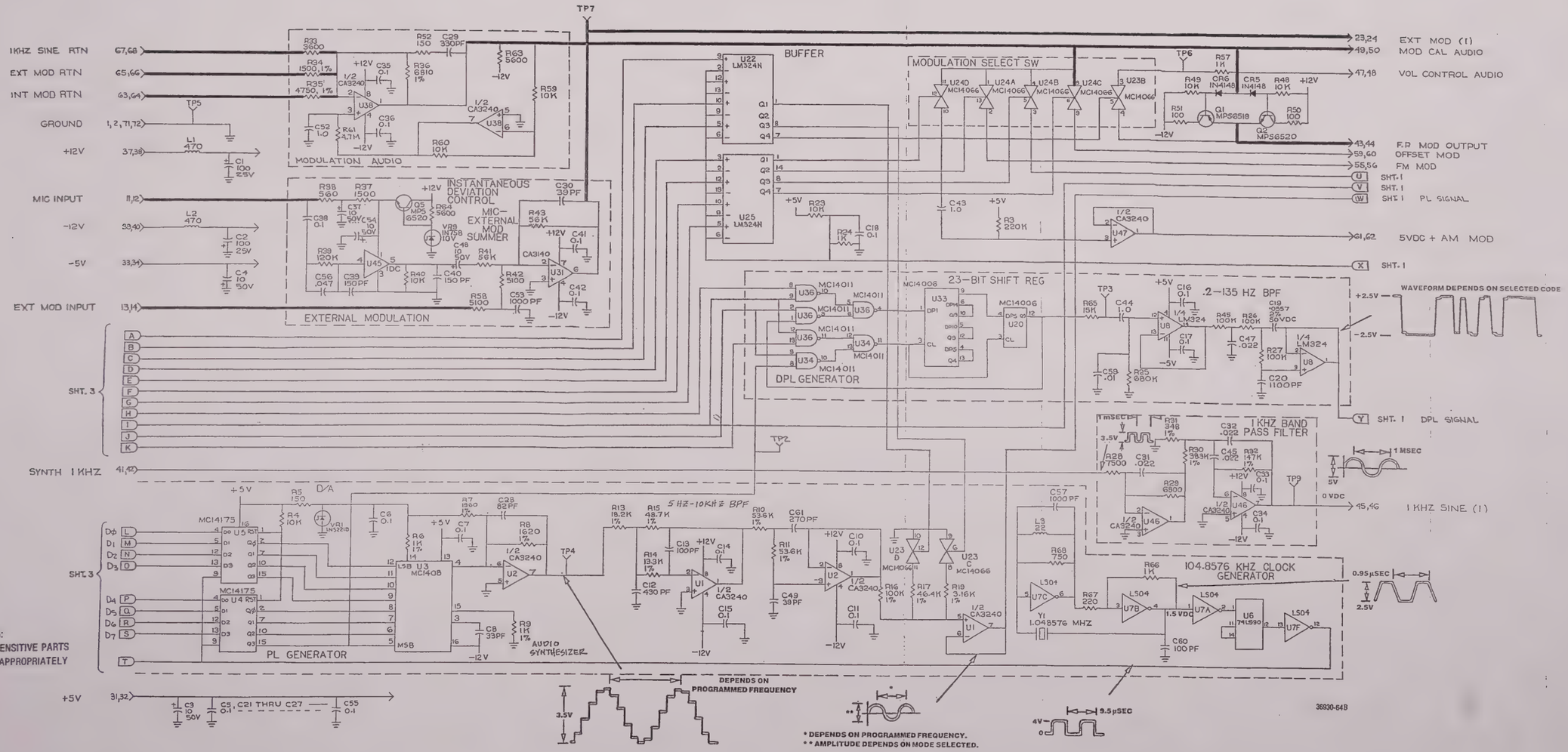

WARNING:
STATIC-SENSITIVE PARTS
HANDLE APPROPRIATELY

AUDIO SYNTHESIZER BOARD (A10)

(RTC-1008A)

Figure 12-2c. Schematic (Sheet 3 of 3)

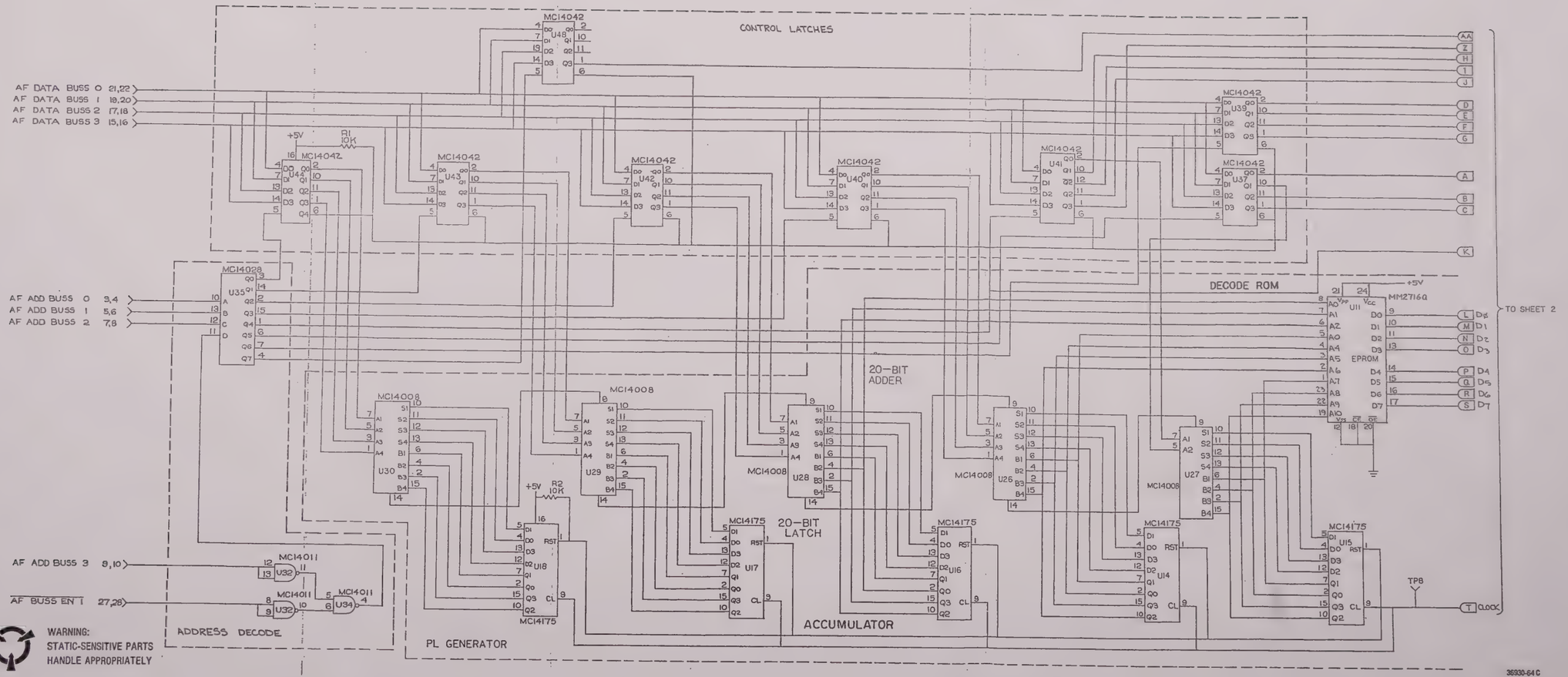

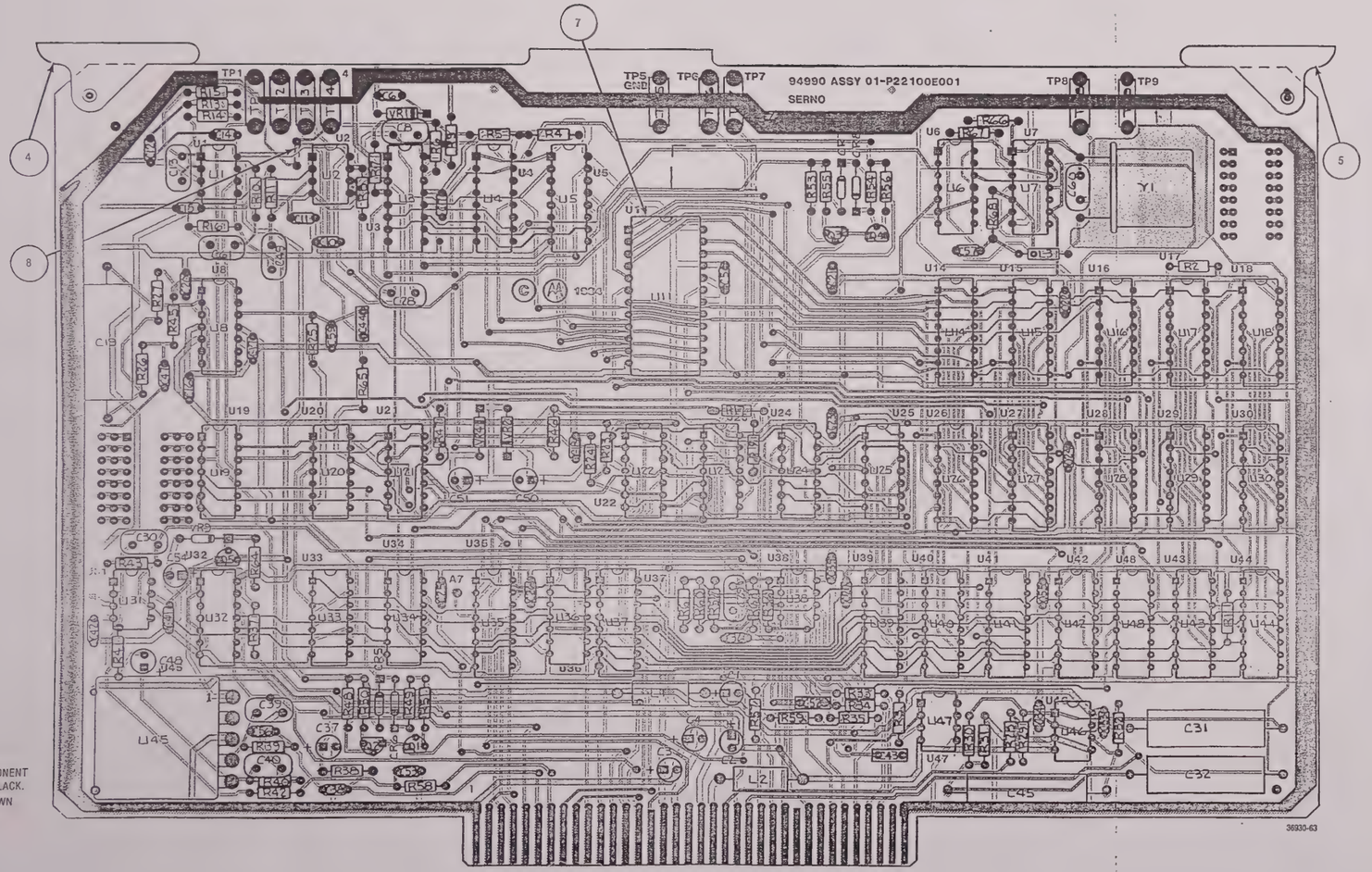

COMPONENTS AND COMPONENT SIDE TRACK SHOWN IN BLACK.
SOLDER-SIDE TRACK SHOWN IN ORANGE

AUDIO SYNTHESIZER BOARD (A10)
RTC-1008A

Find No.	Qty. Req.	Part No.	Nomenclature	Part Value
004	1	45-80339B28	CARD EJECTOR	
005	1	45-80339B29	CARD EJECTOR	MARKED
C 001	1	23-84665F03	CAPACITOR	100UF-20-25
C 002	1	23-84665F03	CAPACITOR	100UF-20-25
C 003	1	23-80341B15	CAPACITOR	10UF-20-50
C 004	1	23-80341B15	CAPACITOR	10UF-20-50
C 005	1	21-80342B10	CAPACITOR	.1UF-20-50
C 006	1	21-80342B10	CAPACITOR	.1UF-20-50
C 007	1	21-80342B10	CAPACITOR	.1UF-20-50
C 008	1	21-80369A90	CAPACITOR	33PF-5-500
C 010	1	21-80342B10	CAPACITOR	.1UF-20-50
C 011	1	21-80342B10	CAPACITOR	.1UF-20-50
C 012	1	21-80341B80	CAPACITOR	430PF-5-50
C 013	1	21-00850118	CAPACITOR	100PF-5-500
C 014	1	21-80342B10	CAPACITOR	.1UF-20-50
C 015	1	21-80342B10	CAPACITOR	.1UF-20-50
C 016	1	21-80342B10	CAPACITOR	.1UF-20-50
C 017	1	21-80342B10	CAPACITOR	.1UF-20-50
C 018	1	21-80342B10	CAPACITOR	.1UF-20-50
C 019	1	08-84326A27	CAPACITOR	.0057UF-2-50
C 020	1	21-80341B47	CAPACITOR	1100PF-5-50
C 021	1	21-80342B10	CAPACITOR	.1UF-20-50
C 022	1	21-80342B10	CAPACITOR	.1UF-20-50
C 023	1	21-80342B10	CAPACITOR	.1UF-20-50
C 024	1	21-80342B10	CAPACITOR	.1UF-20-50
C 025	1	21-80342B10	CAPACITOR	.1UF-20-50
C 026	1	21-80342B10	CAPACITOR	.1UF-20-50
C 027	1	21-80342B10	CAPACITOR	.1UF-20-50
C 028	1	21-80339B18	CAPACITOR	82PF-5-500
C 029	1	21-80339B19	CAPACITOR	330PF-5-100
C 030	1	21-80339B15	CAPACITOR	39PF-5-500
C 031	1	08-84326A48	CAPACITOR	.022UF-1-50
C 032	1	08-84326A48	CAPACITOR	.022UF-1-50
C 033	1	21-80342B10	CAPACITOR	.1UF-20-50
C 034	1	21-80342B10	CAPACITOR	.1UF-20-50
C 035	1	21-80342B10	CAPACITOR	.1UF-20-50
C 036	1	21-80342B10	CAPACITOR	.1UF-20-50
C 037	1	23-80341B15	CAPACITOR	10UF-20-50
C 038	1	21-80342B10	CAPACITOR	.1UF-20-50
C 039	1	21-80369A94	CAPACITOR	150PF-5-500
C 040	1	21-80369A94	CAPACITOR	150PF-5-500
C 041	1	21-80342B10	CAPACITOR	.1UF-20-50
C 042	1	21-80342B10	CAPACITOR	.1UF-20-50
C 043	1	21-80342B46	CAPACITOR	1UF-20-50
C 044	1	21-80342B46	CAPACITOR	1UF-20-50
C 045	1	08-84326A48	CAPACITOR	.022UF-1-50
C 047	1	21-80342B01	CAPACITOR	.022UF-10-100
C 048	1	23-80341B15	CAPACITOR	10UF-20-50
C 049	1	21-80339B15	CAPACITOR	39PF-5-500
C 050	1	23-80341B15	CAPACITOR	10UF-20-50
C 051	1	23-80341B15	CAPACITOR	10UF-20-50
C 052	1	21-80342B46	CAPACITOR	1UF-20-50
C 053	1	21-80341B92	CAPACITOR	1000PF-10-100
C 054	1	23-80341B15	CAPACITOR	10UF-20-50
C 055	1	21-80342B10	CAPACITOR	.1UF-20-50
C 056	1	21-80342B13	CAPACITOR	.047UF-20-50
C 057	1	21-80341B46	CAPACITOR	1000PF-5-50
C 059	1	21-80341B95	CAPACITOR	.01UF-20-100
C 060	1	21-00850118	CAPACITOR	100PF-5-500
C 061	1	21-80339B22	CAPACITOR	270PF-5-300
CR005	1	48-84463K02	DIODE	
CR006	1	48-84463K02	DIODE	
CR007	1	48-84463K02	DIODE	
CR008	1	48-84463K02	DIODE	
L 001	1	24-80348A83	COIL	470UH
L 002	1	24-80348A83	COIL	470UH
L 003	1	24-80369A31	COIL	22UH
Q 001	1	48-80340B85	TRANSISTOR	MPS6519
Q 002	1	48-80340B86	TRANSISTOR	MPS6520
Q 003	1	48-80340B86	TRANSISTOR	MPS6520
Q 004	1	48-80340B85	TRANSISTOR	MPS6519
Q 005	1	48-80340B86	TRANSISTOR	MPS6520
R 001	1	05-11009C73	RESISTOR	10K-5-1/4
R 002	1	05-11009C73	RESISTOR	10K-5-1/4
R 003	1	05-11009D06	RESISTOR	220K-5-1/4
R 004	1	05-11009C73	RESISTOR	10K-5-1/4
R 005	1	05-11009C29	RESISTOR	150-5-1/4
R 006	1	05-10621B94	RESISTOR	1K-1-1/4
R 007	1	05-10621C23	RESISTOR	1.96K-1-1/4
R 008	1	05-10621C15	RESISTOR	1.62K-1-1/4
R 009	1	05-10621B94	RESISTOR	1K-1-1/4
R 010	1	05-10621D62	RESISTOR	53.6K-1-1/4

Figure 12-3. Printed Wiring Board Assembly and Parts List

SECTION 13.
PROCESSOR INTERFACE BOARD (A11)

13.1 DESCRIPTION

The Processor Interface board contains the digital voltmeter (DVM), frequency counter, system timer, and the processor interface for the two system control busses: audio frequency (AF bus) and radio frequency (RF bus). The DVM can measure both dc and ac rms (root-mean-square) voltages. The frequency counter uses two different measuring techniques: the direct count and the reciprocal count.

A block diagram of the Processor Interface board is shown at the end of this section in Figure 13-1, a schematic in Figure 13-2, and the printed wiring board assembly and parts list in Figure 13-3.

13.2 THEORY OF OPERATION

13.2.1 SYSTEM CONTROL-BUS INTERFACE

13.2.1.1 General

Interface between the processor busses and the system is through peripheral-interface adapters (PIA). The PIA is a single integrated-circuit chip that provides 16 input/output latches (PA0-PA7 and PB0-PB7) which can either be read from or written into by the processor. The PIA also contains four control lines: two of these, CA1 and CB1, act as input-only lines for processor interrupts, and the other two, CA2 and CB2, act as output-only control lines. The two system control busses (AF and RF) use a single PIA (U1).

13.2.1.2 AF Control Bus

The AF control bus consists of eight lines split into four data lines (PB0-PB3) and four address lines (PB4-PB7). The address lines define the particular latch in which the data is to be stored, or the buffer from which data is to be obtained. One additional address line, the bus-enable line, is required to enable the address-decoding circuitry. The AF control bus has two bus-enable lines, $\overline{\text{AF BUS EN 1}}$ and $\overline{\text{AF BUS EN 2}}$, which provide a total control-bus capability of 128 bits. The $\overline{\text{AF BUS EN 2}}$ line enables the address-decoder circuitry on the Front-Panel Interface board (A15) and the Processor Interface board (A11). The $\overline{\text{AF BUS EN 1}}$ line, which comes from the Processor board (A14), enables the address-decoder circuitry on the Scope/DVM Control board (A7) and the Audio Synthesizer board (A10).

13.2.1.3 RF Control Bus

The RF control bus is a clocked serial bus which consists of five data lines (PA1, PA3-PA6), a data clock line (CA2), and a latch line (PA7). The data stream is 24 bits long. Four of these data lines (OFFSET DATA, 310-440 DATA, 24 DATA, and 60.5 DATA) program the phase-locked-loop (PLL) ICs on the Duplex Generator and the RF Synthesizer. These ICs disregard the first 5 bits of the serial data stream and latch-in the last 19 bits. The other data line, PA6 system control, controls the Receiver board (A8) and RF Synthesizer board (A9). The RF Synthesizer is programmed by the first 8 bits of the system-control data line, and the Receiver by the last 16 bits.

13.2.1.4 Timer

The timer (U35) provides interval timing to the processor for tone encoding and decoding and other functions. In the encode interval-timing mode, the processor programs the desired interval and initiates the timer with control words on the data lines and an enable pulse on the E line. The timer will interrupt the processor when the programmed interval is completed. In the decode interval-timing mode, the processor will start and stop the timer. The processor will then read the interval time from the timer. The timer reference frequency is the SYNTH 1 KHz, a 1-kHz square wave locked to the system's reference frequency.

13.2.2 DIGITAL VOLTMETER (DVM)

13.2.2.1 General

The DVM measures either the nine internal voltage points or the external voltages. The levels of the inputs to the DVM are auto-ranged for 3-digit accuracy. The DVM consists of an analog-to-digital (A/D) converter, a root-mean-square (rms) converter, and the DVM/FREQ COUNTER PIA which provides the interface between the DVM and the processor.

13.2.2.2 A/D Converter

The A/D converter (U29) converts positive dc voltages between 0 and 1023 mV into a 10-bit digital word. For negative voltages, the signal is converted to a positive voltage by the rms converter (U27), with the

polarity information detected by the SIGN DETECTOR (U34). The information bit for the sign detector is latched into the DVM/counter buffer (U20). The processor initiates an A/D conversion with a pulse on the start line (U29 PIN21). The A/D converter signals the processor that the conversion is complete by a pulse on the end line (U29 PIN23). The processor, in turn, enables the output drivers on the A/D, sets the DVM/COUNTER buffer to the DVM mode, and inputs the 10-bit word from the A/D and the sign bit.

13.2.2.3 Internal DVM

Internal DVM voltages in the System Analyzer are all positive and proportional to certain parameters in the system. (See Section 9, Scope/DVM Control board A7, paragraph 9.2.8.2.) These signals are auto-ranged over two decades to a 0 to 1-Vdc range on the A7 board and routed to the INT DVM TO A/D input on the A11 board. The processor makes an internal measurement by selecting the internal path which routes the signal directly to the A/D converter for conversion, as described in paragraph 13.2.2.2.

13.2.2.4 External DVM

13.2.2.4.1 General

In the external DVM mode, voltages applied to the input jack on the front panel are auto-ranged on the Front-Panel Interface board (A15) to provide four full-scale displays of 1, 10, 100, and 300V. From A15, the signal is passed directly through the A7 board to the EXT DVM TO A/D input on the A11 board. The resulting dynamic voltage range at the EXT DVM TO A/D input is 0 to 1 Vrms. This signal is amplified at U28 by a voltage gain of 3.5 and applied to the rms-to-dc converter. The resulting output is applied to attenuator R22 with a voltage gain of 1/3.5. The amplifier and attenuator allow the rms-to-dc converter to work with larger signal levels. This provides a net increase in conversion speed. The output of the attenuator is then routed to the A/D converter for conversion, as described in paragraph 13.2.2.2.

13.2.2.4.2 DC/AC Mode

In the dc mode, inputs are low-pass filtered in the A15 board before entering the A11 board. The rms-to-dc converter reads true rms; therefore, the output for a dc input is the positive square root of the input square — that is, the absolute value of the input voltage. The polarity of the signal is determined by the sign detector, U34. In the ac mode, inputs are capacitor-coupled in the A15 board. Therefore, only the rms voltage of the ac component is measured.

13.2.2.5 Distortion Reading

In the distortion-measurement mode, the 1-kHz fundamental of the input is filtered out by a notch filter on the A7 board. The distortion products are routed to the EXT DVM TO A/D input of the A11 board for input to the processor by the A/D converter. The input to the notch filter is rectified and averaged on the A7 board and then routed through the internal DVM circuitry for measurement. To obtain the percent of distortion for a 1-kHz input signal, the processor divides the rms output voltage of the notch filter by the average rectified input voltage to the notch filter.

13.2.3 FREQUENCY COUNTER

13.2.3.1 General

The frequency counter uses two methods to determine frequency: direct counting and reciprocal counting. In this manual the direct method will be called "frequency counter" and the reciprocal method will be called "period counter."

In the direct method, the counter counts cycles of the unknown signal for a precisely known length of time, called a gate time. The resolution of the measured signal is directly proportional to the gate time, one Hertz in one second. The reciprocal method measures frequency by counting the number of internal clock cycles per one period of the unknown signal. This technique makes the resolution of the measured frequency proportional to the frequency of the internal clock. For a 1-MHz internal clock, the measurement of a 1-kHz signal would take 1 msec and provide a resolution of 1 Hz.

Three possible signal sources are available to the frequency counter for frequency determination. The desired signal is selected and sent to the counter by select switch U8. For external inputs, the EXTERNAL COUNTER lines from the Front-Panel Interface board (A15) provide the input which is buffered by U3B, Q4 and Q5 on the A11 board. The signal for off-the-air tone-sequence decode is DEMOD CAL AUDIO, which is routed through the A7 board to the INT SCOPE TO RNG SW line. This signal is connected to A15, where it is routed through the range switch to the EXTERNAL COUNTER input. Monitor frequency error is determined from the IF/BFO FREQ line by comparing that frequency to 700 kHz.

13.2.3.2 Frequency Counter

The frequency counter consists of a gate-time generator (U9-U13), an accumulator (U18, U19), a buffer (DVM/COUNTER BUFFER U20-U22), a PIA (U2, as described in paragraph 13.2.1.1), and control circuitry

(U15, U16, U17B). The control circuitry and the gate-time generator are sequentially gated by a 1-kHz clock. A measurement cycle for the frequency counter begins with a START pulse from PIA line CA2. This pulse resets the gate-time generator and clears the accumulator via the control circuitry (U16A and U16B). On the next cycle of the 1-kHz clock, the accumulator input gate (U17B) is enabled by the control circuitry (U15A). The accumulator will total the cycles of the unknown signal until the time-out of the gate timer or until an accumulator overflow is detected by U8D, U17A, and U17C. This will disable the accumulator input and signal the processor (via the PIA pin, CA1) that the count is complete. The processor, in turn, disables the A/D output drivers, switches the DVM/COUNTER BUFFER to the counter mode, and inputs the 16-bit accumulator information.

The gate-time generator provides gate times of 0.001, 0.01, 0.1, 1, and 10 seconds, which translate to resolutions of 1000, 100, 10, 1, and 0.1 Hz. These gate times are user-selectable or can be auto-selected by the processor to give a 5-digit frequency display with a resolution of 0.1 Hz.

13.2.3.3 Period Counter

The period counter consists of a clock generator (U46-U49), a positive-edge detector (U39B), control circuitry (U36-40), and the same accumulator, buffer, and PIA as the frequency counter. The control circuitry is sequentially gated at the same rate as the clock generator. A period-counter measurement begins with a START pulse from PIA line CA2. This pulse clears the accumulator (U18, U19) and control circuitry (U38, U39A). The period counter then waits for U39B to detect a positive rising edge of the unknown signal. When a positive edge is detected, the control circuitry will enable the accumulator input gate (U40B). The accumulator will count the cycles of the period-counter clock until the next positive rising edge of one period of the unknown signals. This will disable the accumulator input and signal the processor (via PIA pin CA1) that the count is complete. The processor will then input the data as described above for the frequency counter.

The period-counter clock generator (U47-U49) takes the RF Synthesizer's 10-MHz signal and divides it down to 1 MHz and 100 kHz. These three signals (10 MHz, 1 MHz, and 100 kHz) are selected and sent to the counter by switch U46. These clock rates produce period-counter resolutions of 0.1 Hz, 1 Hz, 10 Hz, 100 Hz, and 1 kHz. The resolutions are user-selectable or can be auto-selected by the processor.

13.2.4 BOARD CONTROL

The processor on the AF control bus controls this board. The 4-bit address (AF ADD BUS 0-3) is decoded by the address decoder (U5, U33, U43) to determine in which control latch (U6, U7, or U42) the control data is to be stored. The four data bits (AF DATA BUS 0-3) are then stored in the selected control latch by a pulse on the $\overline{\text{AF BUS EN 2}}$ line.

Figure 13-1. Block Diagram

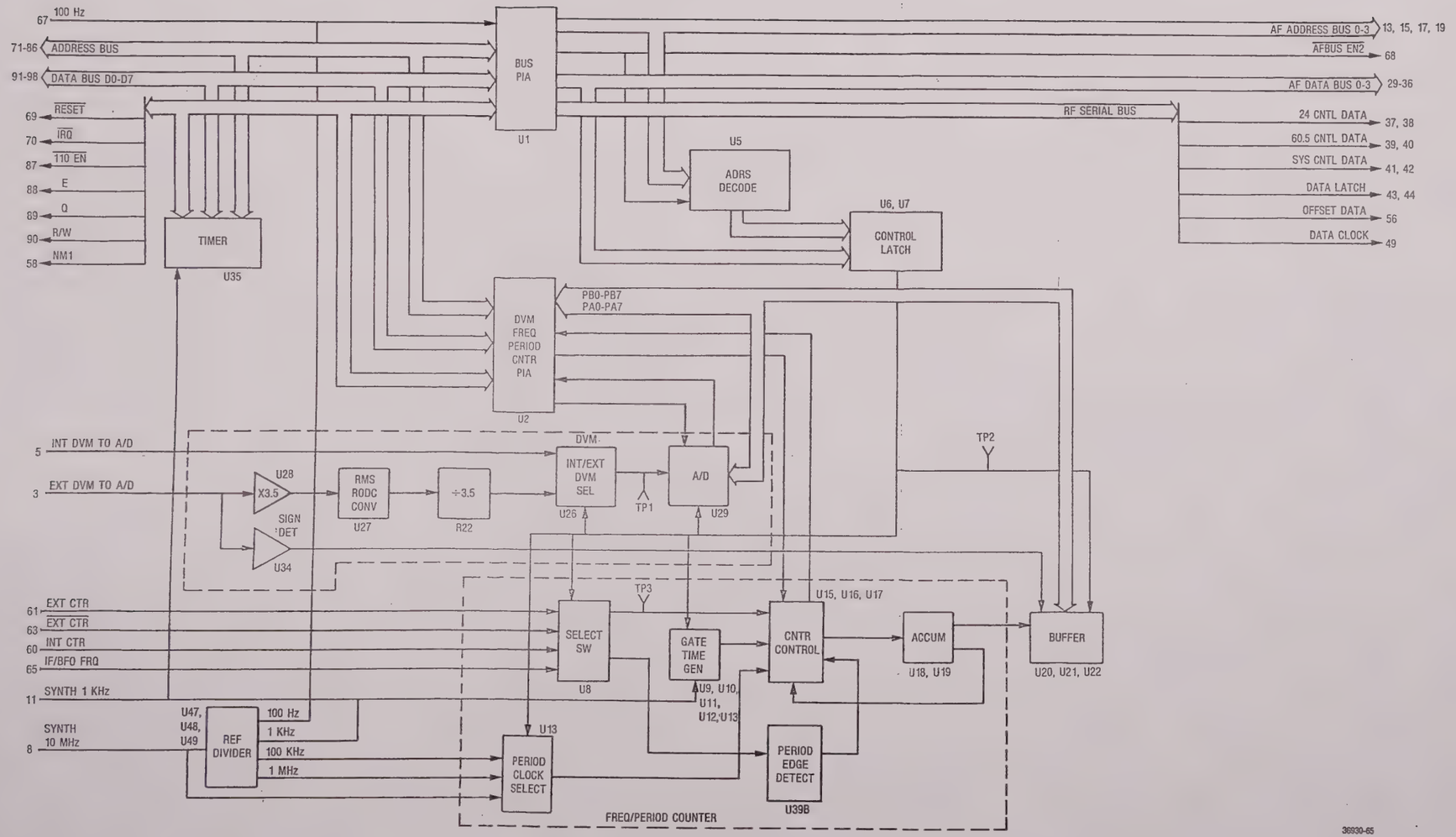

PROCESSOR INTERFACE BOARD (A11)

(RTC-1009A)

Figure 13-2a. Schematic (Sheet 1 of 3)

NOTES:

1. PARTIAL REFERENCE DESIGNATIONS ARE SHOWN. FOR COMPLETE DESIGNATIONS PREFIX WITH 1A11.
2. UNLESS OTHERWISE SPECIFIED
   ALL RESISTORS ARE IN OHMS ± 5% PCT, 1/4 WATTS).
   ALL CAPACITORS ARE IN UF.
   ALL INDUCTORS ARE IN MH.
   ALL VOLTAGES ARE IN DC.

REF DES	DEVICE	+5V	-5V	GND	+12V	-12V	ASSOC CAPS
U1	MC6821	20		1			
U2	MC6821	20		1			C20
U3	MC10116	16		8			C77
U4							
U5	MC14073	14		7			C61
U6	MC14072	16		8			C63
U7	MC14042	16		8			C66
U8	74LS00	14		7			C68
U9	MC14518	16		8			C55
U10	MC14518	16		8			C60
U11	MC14081	14		7			C56
U12	MC14081	14		7			C62
U13	MC14512	16		8			C64
U14							
U15	74LS74	14		7			C53
U16	MC14027	16		8			C59
U17	74LS11	14		7			C52
U18	74LS197	14		7			C54
U19	MC14040	16		8			
U20	MC14503	16		8			C51
U21	MC14503	16		8			C21
U22	MC14503	16		8			C22
U23	74LS86	14		7			C48
U24							
U25							
U26	H1201-5			5	13	9	C11,C12
U27	ADS36AKH			2	3	5	
U28	LF356N				7	9	
U29	8704	19	18	20			
U30	LM308A				7	9	C36
U31	MC1403						
U32							
U33	MC14069	14		7			C67
U34	LF356N				7	9	
U35	MC6840C	14		1			C65
U36	74LS10	14		7			C19
U37	74LS00	14		7			C71
U38	74LS74	14		7			C74
U39	74LS74	14		7			C73
U40	74LS08	14		7			C23
U41	74LS245	20		10			C76
U42	MC14042	16		8			C75
U43	MC14073	14		7			C72
U44	74LS27	14		7			
U45	74LS08	14		7			C15
U46	74LS54	14		7			C27
U47	74LS390	16		8			C49
U48	74LS390	16		8			
U49	74LS390	16		8			C50

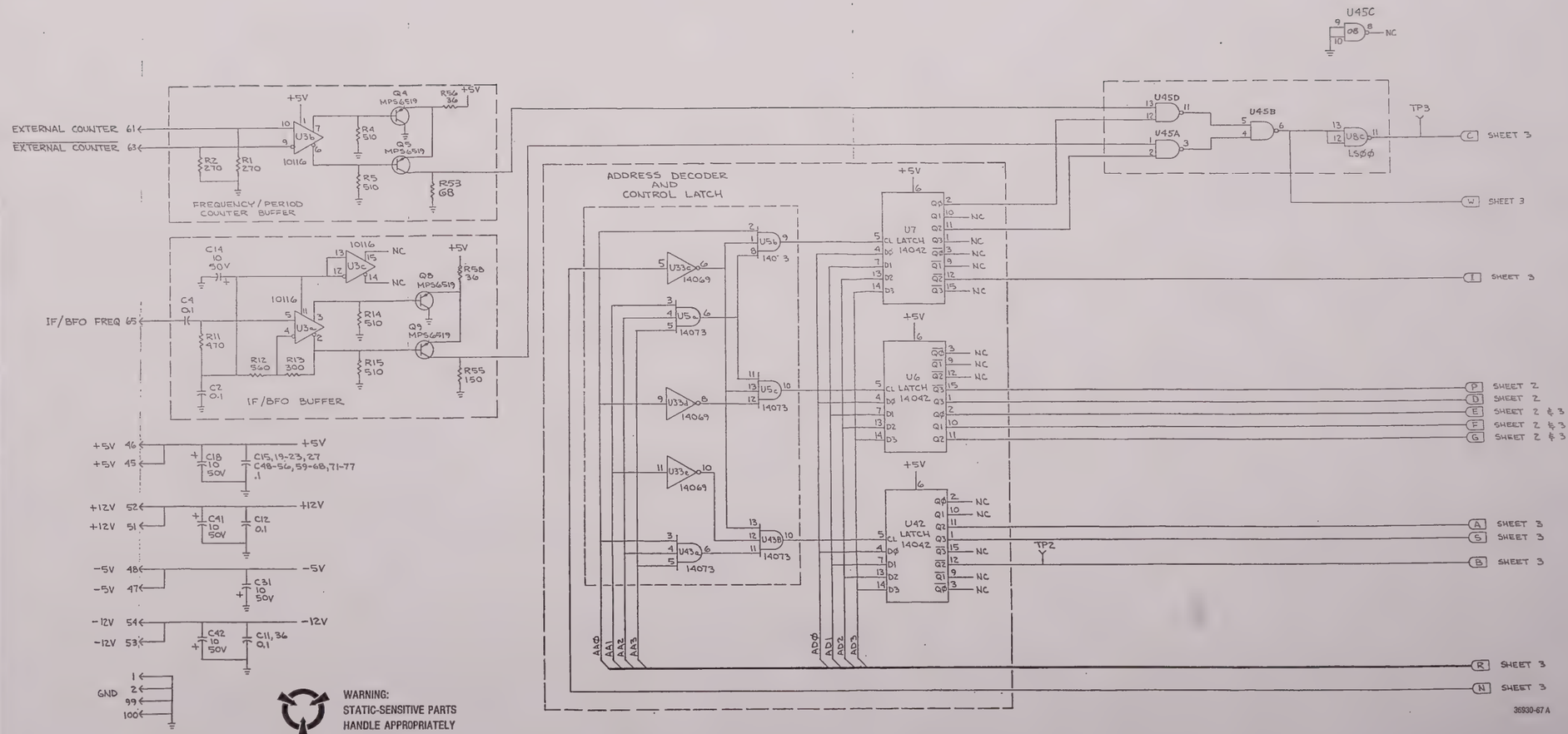

Figure 13-2b. Schematic (Sheet 2 of 3)

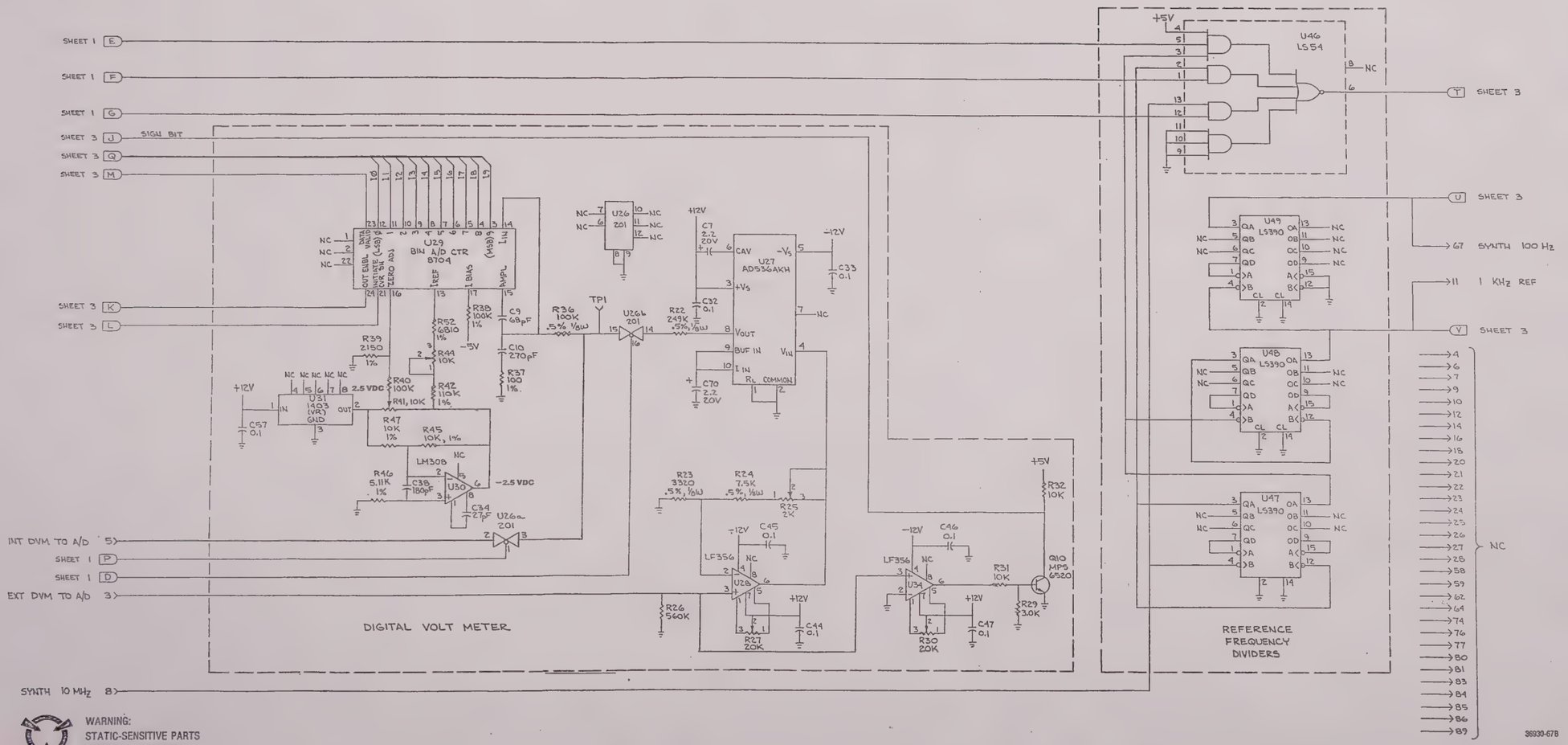

WARNING:
STATIC-SENSITIVE PARTS
HANDLE APPROPRIATELY

PROCESSOR INTERFACE BOARD (A11)

(RTC-1009A)

Figure 13-2c. Schematic (Sheet 3 of 3)

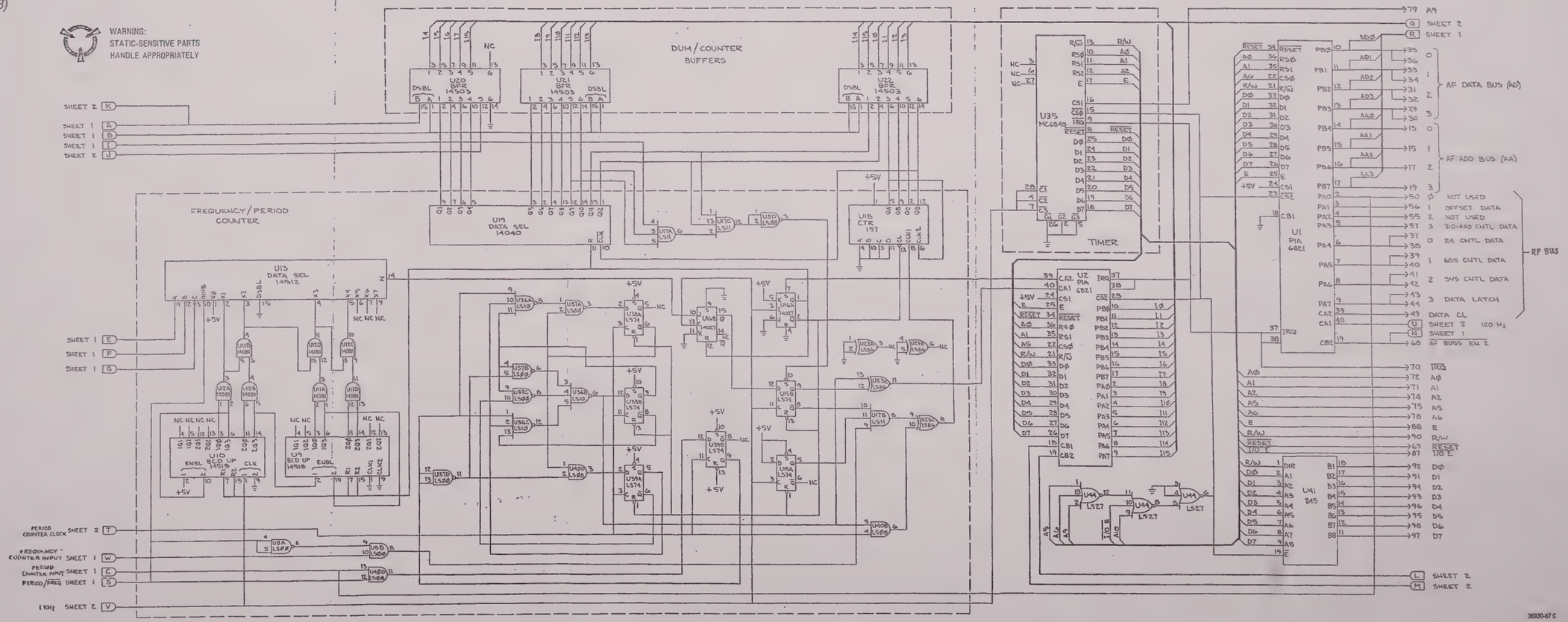

36930-67 C

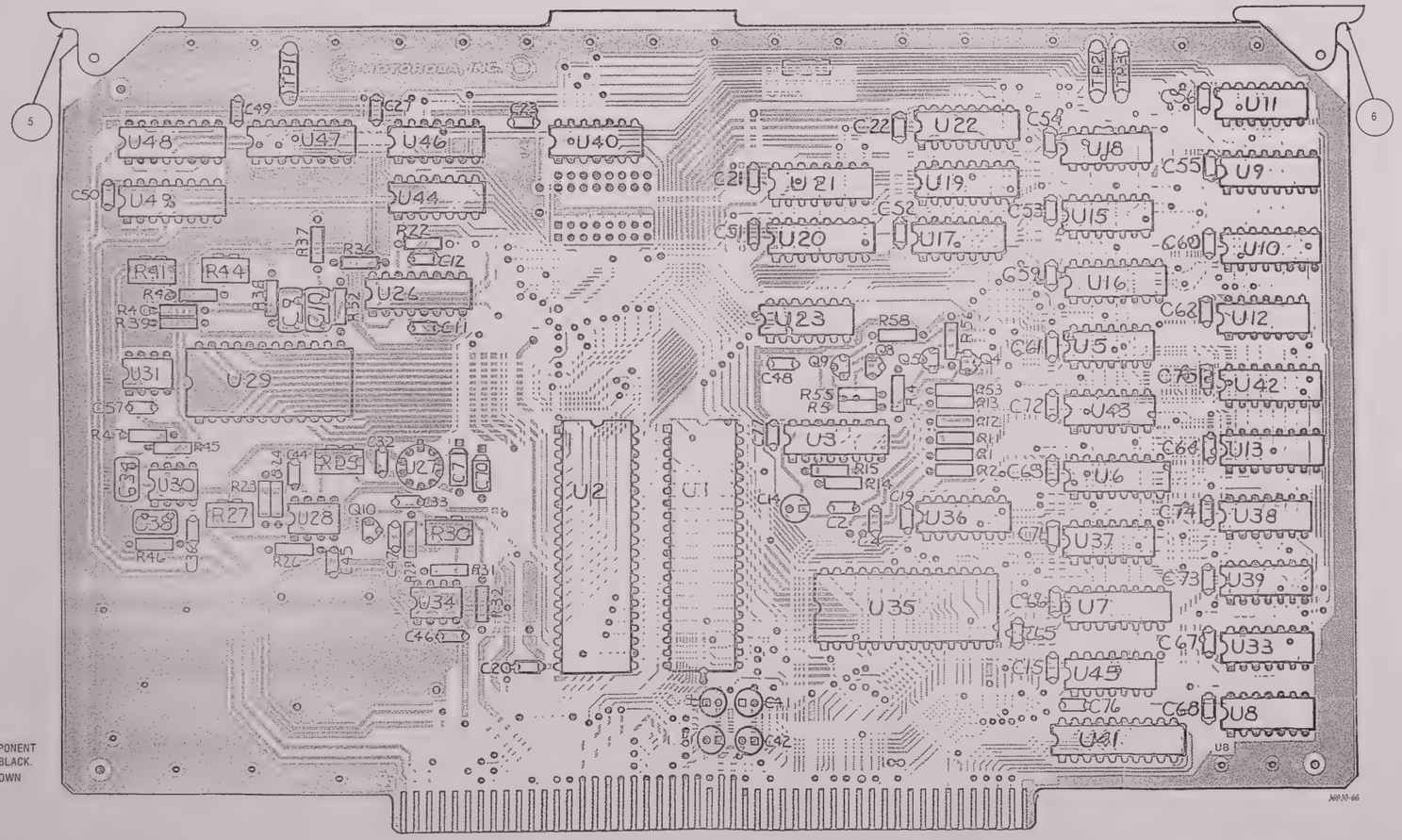

COMPONENTS AND COMPONENT SIDE TRACK SHOWN IN BLACK.
SOLDER-SIDE TRACK SHOWN IN ORANGE

PROCESSOR INTERFACE BOARD (A11)
RTC-1009A

Find No.	Qty. Req.	Part No.	Nomenclature	Part Value
005	1	45-80339B28	CARD EJECTOR	
006	1	45-80339B30	CARD EJECTOR	MARKED
C 002	1	21-80342B10	CAPACITOR	.1UF-20-50
C 004	1	21-80342B10	CAPACITOR	.1UF-20-50
C 007	1	23-80341B02	CAPACITOR	2.2UF-20-20
C 009	1	21-80396A47	CAPACITOR	68PF-5-500
C 010	1	21-80339B22	CAPACITOR	270PF-5-300
C 011	1	21-80342B10	CAPACITOR	.1UF-20-50
C 012	1	21-80342B10	CAPACITOR	.1UF-20-50
C 014	1	23-80341B15	CAPACITOR	10UF-20-50
C 015	1	21-80342B10	CAPACITOR	.1UF-20-50
C 018	1	23-80341B15	CAPACITOR	10UF-20-50
C 019	1	21-80342B10	CAPACITOR	.1UF-20-50
C 020	1	21-80342B10	CAPACITOR	.1UF-20-50
C 021	1	21-80342B10	CAPACITOR	.1UF-20-50
C 022	1	21-80342B10	CAPACITOR	.1UF-20-50
C 023	1	21-80342B10	CAPACITOR	.1UF-20-50
C 027	1	21-80342B10	CAPACITOR	.1UF-20-50
C 031	1	23-80341B15	CAPACITOR	10UF-20-50
C 032	1	21-80342B10	CAPACITOR	.1UF-20-50
C 033	1	21-80342B10	CAPACITOR	.1UF-20-50
C 034	1	21-80369A89	CAPACITOR	27PF-5-500
C 036	1	21-80342B10	CAPACITOR	.1UF-20-50
C 038	1	21-80369A95	CAPACITOR	180PF-5-500
C 041	1	23-80341B15	CAPACITOR	10UF-20-50
C 042	1	23-80341B15	CAPACITOR	10UF-20-50
C 044	1	21-80342B10	CAPACITOR	.1UF-20-50
C 045	1	21-80342B10	CAPACITOR	.1UF-20-50
C 046	1	21-80342B10	CAPACITOR	.1UF-20-50
C 047	1	21-80342B10	CAPACITOR	.1UF-20-50
C 048	1	21-80342B10	CAPACITOR	.1UF-20-50
C 049	1	21-80342B10	CAPACITOR	.1UF-20-50
C 050	1	21-80342B10	CAPACITOR	.1UF-20-50
C 051	1	21-80342B10	CAPACITOR	.1UF-20-50
C 052	1	21-80342B10	CAPACITOR	.1UF-20-50
C 053	1	21-80342B10	CAPACITOR	.1UF-20-50
C 054	1	21-80342B10	CAPACITOR	.1UF-20-50
C 055	1	21-80342B10	CAPACITOR	.1UF-20-50
C 056	1	21-80342B10	CAPACITOR	.1UF-20-50
C 057	1	21-80342B10	CAPACITOR	.1UF-20-50
C 059	1	21-80342B10	CAPACITOR	.1UF-20-50
C 060	1	21-80342B10	CAPACITOR	.1UF-20-50
C 061	1	21-80342B10	CAPACITOR	.1UF-20-50
C 062	1	21-80342B10	CAPACITOR	.1UF-20-50
C 063	1	21-80342B10	CAPACITOR	.1UF-20-50
C 064	1	21-80342B10	CAPACITOR	.1UF-20-50
C 065	1	21-80342B10	CAPACITOR	.1UF-20-50
C 066	1	21-80342B10	CAPACITOR	.1UF-20-50
C 067	1	21-80342B10	CAPACITOR	.1UF-20-50
C 068	1	21-80342B10	CAPACITOR	.1UF-20-50
C 070	1	23-80341B02	CAPACITOR	2.2UF-20-20
C 071	1	21-80342B10	CAPACITOR	.1UF-20-50
C 072	1	21-80342B10	CAPACITOR	.1UF-20-50
C 073	1	21-80342B10	CAPACITOR	.1UF-20-50
C 074	1	21-80342B10	CAPACITOR	.1UF-20-50
C 075	1	21-80342B10	CAPACITOR	.1UF-20-50
C 076	1	21-80342B10	CAPACITOR	.1UF-20-50
C 077	1	21-80342B10	CAPACITOR	.1UF-20-50
Q 004	1	48-80340B85	TRANSISTOR	MPS6519
Q 005	1	48-80340B85	TRANSISTOR	MPS6519
Q 008	1	48-80340B85	TRANSISTOR	MPS6519
Q 009	1	48-80340B85	TRANSISTOR	MPS6519
Q 010	1	48-80340B88	TRANSISTOR	MPS6520
R 001	1	06-11009C35	RESISTOR	270-5-1/4
R 002	1	06-11009C35	RESISTOR	270-5-1/4
R 004	1	06-11009C42	RESISTOR	510-5-1/4
R 005	1	06-11009C42	RESISTOR	510-5-1/4
R 011	1	06-11009C41	RESISTOR	470-5-1/4
R 012	1	06-11009C43	RESISTOR	560-5-1/4
R 013	1	06-11009C61	RESISTOR	3.3K-5-1/4
R 014	1	06-11009C42	RESISTOR	510-5-1/4
R 015	1	06-11009C42	RESISTOR	510-5-1/4
R 022	1	06-80396A56	RESISTOR	249K-.5-1/8
R 023	1	06-80396A67	RESISTOR	3.32K-.5-1/8
R 024	1	06-80396A69	RESISTOR	7.5K-.5-1/8
R 025	1	18-83452F01	RESISTOR,VARIABLE	2K
R 026	1	06-11009D16	RESISTOR	560K-5-1/4
R 027	1	18-83452F15	RESISTOR,VARIABLE	20K
R 029	1	06-11009C60	RESISTOR	3K-5-1/4
R 030	1	18-83452F15	RESISTOR,VARIABLE	20K
R 031	1	06-11009C73	RESISTOR	10K-5-1/4

PROCESSOR INTERFACE BOARD (A11)
(RTC-1009A)

Figure 13-3. Printed Wiring Board Assembly and Parts List

SECTION 14.
PROCESSOR BOARD (A14) 01-P22240E001
PROCESSOR BOARD (A14) 01-P29050H001

PART 1. PROCESSOR BOARD 01-P22140E001

14.1 DESCRIPTION

The Processor board provides primary control and data manipulations for the System Analyzer. This board contains the microprocessor, program read-only memory (ROM), nonvolatile memory (NVM), random-access memory (RAM), peripheral-interface adapter (PIA), timing generator, and character generator. Input and output information is transferred through the (PIA) and the address, data, and control busses. The board uses a Motorola M6800-series microprocessor, 2K×8 of RAM, 1K×8 of NVM, and 24K×8 of paged ROM.

A block diagram of the Processor board is shown at the end of this section in Figure 14-2, a schematic in Figure 14-3, and the printed wiring board assembly and parts list in Figure 14-4.

14.2 THEORY OF OPERATION

14.2.1 MICROPROCESSOR

An M6809 microprocessor controls the System Analyzer's operating modes. The device has an 8-bit data bus, a 16-bit address bus, and a control bus which synchronizes data transfer and specialized processor functions. The microprocessor uses the 4-MHz crystal (Y1) to provide an operating frequency of 1 MHz on the E and Q lines.

14.2.2 MEMORY

14.2.2.1 Memory Access

To allow the microprocessor's 16-bit address to access more than 64K of memory, the memory is structured in pages, as shown in Figure 14-1. The pages are broken down into chip-select blocks. To select a page of memory, the processor uses two outputs (PB1 and PB2) from PIA U22. (See the A11 section, paragraph 13.2.1.1 for a description of the PIA.) These two signals work in conjunction with the address decoders (U23, U50, and U51) to select the proper memory device.

14.2.2.2 Program Read-Only Memory (ROM)

The program memory for the main System Analyzer is located on page 2 of the memory map. The

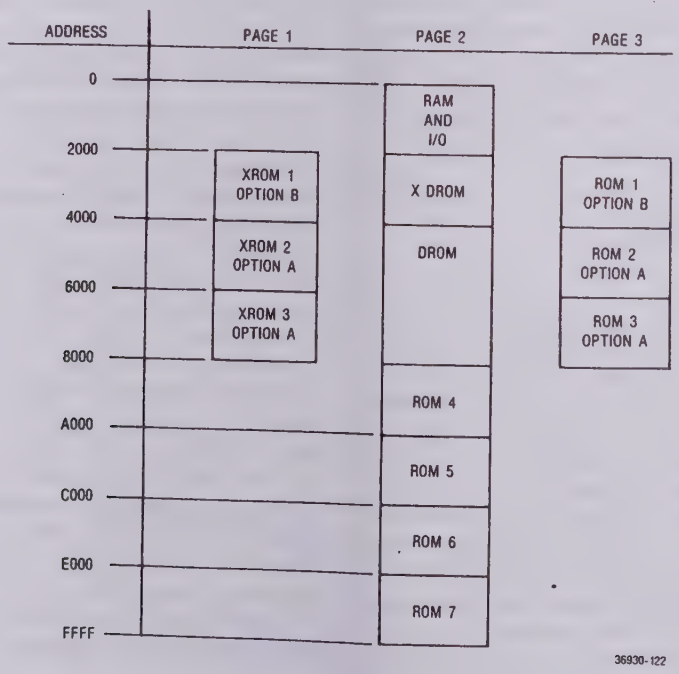

Figure 14-1. Memory Map

ROM consists of three 8192 × 8-bit and two 16,384 × 8-bit read-only memory devices. The program memory for the IEEE option (Option B) and the cellular mobile telephone option (Option A) is contained on pages 1 and 3. Option B uses a single 8192 × 8-bit ROM device, while Option A uses two 16,384 × 8-bit ROM devices.

14.2.2.3 Random-Access Memory (RAM)

The random-access memory provides temporary data storage for the processor and for the CRT alphanumeric display. The RAM for the main program and all options is located on page 2 of memory. The main program's RAM can store 1024 eight-bit words, of which 512 are used for the CRT display data. Option A has provisions for a 1024 × 8-bit RAM device.

14.2.2.4 Nonvolatile Memory (NVM)

The nonvolatile memory provides storage for 1024 8-bit words. Data that is to be held during power-off is held in the NVM, which consists of a battery-backed RAM. When the power is turned on, the microprocessor reads the NVM contents to obtain its start-up mode, the RF and tone-memory presets, and the remainder of the preset data. If the operator changes a preset, the microprocessor changes the data in the NVM to remember the new preset.

14.2.3 INPUT/OUTPUT

Peripheral-interface adapters provide input and output latches for external data to and from the processor. The PIA on this board (U22) provides for nine inputs from the keyboard, four column inputs (COL 0-3), and five row inputs (ROW 0-4). When the two inputs OPT A DET and OPT B DET are pulled low, they signal the processor that the Option A or Option B boards are installed. Another input (OPTO DIR) provides the processor with the optical encoder's direction of rotation. Two outputs, PB0 and PB1, select the memory page.

14.2.4 CHARACTER DISPLAY

14.2.4.1 General

Characters are displayed on the CRT as 8-by-8 dot matrices. Thirty-two dot matrices, of which the last two are always blank, make one character line. Sixteen character lines, of which the last one is always blank, make a display frame. Thus, the total number of matrices available for character display is 30 × 15 or 450. The two blank matrices and the blank line are used for horizontal and vertical retrace blanking, respectively. The display is generated by dot rows. As the CRT sweeps the first dot row of a character line, the character generator outputs a serial-bit pattern of 1's and 0's that turns the CRT intensity on and off. The result is a row of dots that, when combined with the next seven rows, forms a character.

The frame display is stored at U27 in 32 × 16 bytes of RAM; this RAM is shared by the character generator and the processor. The two are synchronized to access the RAM during alternate half cycles of the master E clock. The RAM multiplexer (U24-U26) allows both the processor and the character generator to have non-interference access to the RAM every other 0.5 microsecond. In RAM, the processor stores an 8-bit word representing the character to be displayed.

14.2.4.2 Timing Generator

The timing generator provides timing signals for the character generator. All the timing signals are synchronized to the 1-MHz E clock from the microprocessor. The E and Q clocks are exclusive-OR'd to provide a 2-MHz signal which is used to clock the 8-bit shift register (U13). This clock signal provides the dot rate. The 1-MHz E clock is divided-by-four by U19, and the resulting signal is used to latch one dot-matrix row into U11. This provides a dot-matrix rate of 250 kHz. The divided-by-four signal is further divided by a 12-bit binary counter (U10 and U15), to provide a row rate of 7812.5 Hz, a character line rate of 976.5 Hz, and a frame rate of 61.04 Hz.

14.2.4.3 Character Generator

The character generator simultaneously scans the RAM in sequence with the CRT display scan. The signals for the CRT display scan come from the horizontal and vertical character-sweep generators on the Scope Amplifier board (A7). The 12-bit binary counter provides the 9 bits of information stored in RAM. As each location in RAM is addressed, the 8-bit word stored at that location is latched into the 8-bit latch (U11) at the dot-matrix rate of 250 kHz. Seven of the bits are held in the latch and are applied to the character ROM (U12); the remaining bit is not used. An additional 3 bits from the 12-bit binary counter tell which row of dots is being scanned. Thus, the 10 bits being applied to the character ROM define a particular dot row of a particular character. The 8-bit pattern that defines this dot row is then available at the output of the character ROM. This output is parallel-loaded into the 8-bit shift register, U13. The 8 bits are serially shifted out on the CHAR GEN Z-AXIS line at a dot rate of 2 MHz. The 12-bit binary counter also provides synchronizing signals for the character-sweep generators on the A7 board. The horizontal and vertical character-sweep generators are reset and started by one-shots U34A and U34B, respectively. The horizontal one-shot enable is located at the end of a dot row. The vertical one-shot enable has two sources: the $\overline{\text{CHAR GEN RESET}}$ line for dual-display mode, and the 12-bit binary counter end-of-frame for character display. Also provided is a signal $\overline{\text{LINE 1}}$ which signals the dual-display control on the Scope/DVM Control board that the first character line has been traced.

PART 2. PROCESSOR BOARD 01-P29050H001

14.3 DESCRIPTION

The Processor board provides primary control and data manipulations for the system analyzer, and contains the following:

- microprocessor
- program read only memory (ROM)
- nonvolatile memory (NVM)
- random access memory (RAM)
- peripheral-interface adapter (PIA)
- printer circuitry
- dual tone multifrequency (DTMF) encoder/decoder
- timing generator
- character generator

Input and output information is transferred through the PIA and the address, data, and control buses.

A block diagram of the Processor board is shown at the end of this section in Figure 14-5, a schematic in Figure 14-6, and the printed wiring board assembly and parts list in Figure 14-7.

14.4 THEORY OF OPERATION

14.4.1 MICROPROCESSOR

An M6809 microprocessor controls the system analyzer's operating modes. The device has an 8-bit data bus, a 16-bit address bus, and a control bus which synchronizes data transfer and specialized processor functions. The microprocessor uses a 4-MHz crystal (Y1) to provide an operating frequency of 1 MHz on the E and Q lines.

14.4.2 MEMORY

14.4.2.1 Memory Access

To allow the microprocessor's 16-bit address bus to access more than 64K of memory, the memory is structured in pages, as shown in Figure 14-2 The pages are broken down into chip-select blocks. To select a page of memory, the processor uses 4 outputs (PB0, PB1, PB2, and PB3) from PIA U38. (See section 13, A11 for a description of PIAs.) These signals work in conjunction with the address decoders (U7 and U8) to select the proper memory device.

14.4.2.2 Program Read Only Memory (ROM)

The Processor Board's program memory is located in the unpaged area of the memory map, page 2 and page 4. The ROM consists of three 32K × 8-bit read-only memory devices. The program memory for the options is on the pages shown in Figure 14-2.

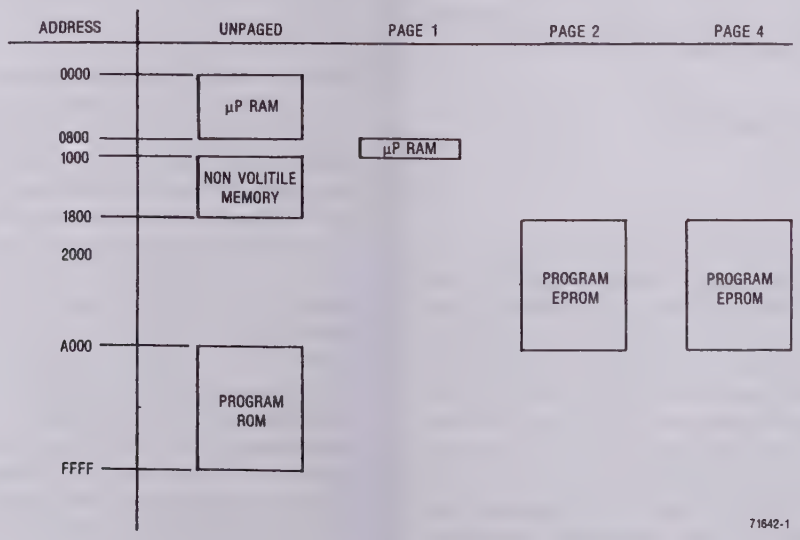

Figure 14-2. Memory Map

14.4.2.3 Random Access Memory (RAM)

The random access memory provides temporary data storage for the processor and for the CRT alphanumeric display. RAM is partitioned into unpaged, processor paged, and option paged RAM. The unpaged RAM can store 2048 8-bit words, of which 512 are used for the CRT display data. The unpaged RAM is located from 000 to 7FF hex. Each paged RAM can store 2048 8-bit words and is located from 800 to FFF hex. The processor paged RAM is enabled by pulling output PB4 of U38 low. Pulling this output high causes XRAM to go low when a valid address occurs, enabling option paged RAM. To prevent more than one option RAM from being enabled, each option has another enable line that must be set.

14.4.2.4 Nonvolatile Memory (NVM)

The nonvolatile memory provides storage for 2048 8-bit words. Data that is to be held during power-off is held in the NVM, which consists of a battery-backed RAM. When the power is turned on, the microprocessor reads the NVM contents to obtain its start-up mode, the RF and tone-memory presets, and the remainder of the preset data. If the operator changes a preset, the microprocessor changes the data in the NVM to reflect the new preset.

14.4.3 INPUT/OUTPUT

Peripheral Interface Adapters provide input and output latches for external data to and from the processor. One of the PIAs on this board (U39) provides for nine inputs from the keyboard: five row inputs (ROW 0-4), and four column inputs (COL 0-3). OPT A DET and OPT B DET are outputs which enable the program memory for the A and B slot, respectively. Another input (OPTO DIR) provides the processor with the optical encoder's direction of rotation.

14.4.4 CHARACTER DISPLAY

14.4.4.1 General

Characters are displayed on the CRT as 8×8 dot matrices. One character line is composed of 32 dot matrices, of which the last two are always blank. A display frame is composed of 16 character lines, of which the last one is always blank. Thus, the total number of matrices available for character display is 30×15 or 450. The two blank matrices and the blank line are used for horizontal and vertical retrace blanking, respectively. The display is generated by dot rows. As the CRT sweeps the first dot row of a character line, the character generator outputs a serial-bit pattern of 1s and 0s that turns the CRT intensity on and off. The result is a row of dots, which combined with the next seven rows, forms a character.

The frame display is stored at U26, in 32×16 bytes of RAM. This RAM is shared by the character generator and the processor. The two are synchronized to access the RAM during alternate half cycles of the master E clock. The RAM multiplexer (U28-U30) allows both the processor and the character generator to have non-interference access to the RAM every other 0.5 microsecond. In RAM, the processor stores an 8-bit word representing the character to be displayed.

14.4.4.2 Timing Generator

The timing generator provides timing signals for the character generator. All the timing signals are synchronized to the 1-MHz E clock from the microprocessor. The E and Q clocks are exclusive-OR'd to provide a 2-MHz signal which is used to clock the 8-bit shift register (U1). This clock signal provides the dot rate. The 1-MHz E clock is divided-by-four by U10, and the resulting signal is used to latch one dot-matrix row into U3. This provides a dot-matrix rate of 250 kHz. The divided-by-four signal is further divided by a 12-bit binary counter (U24 and U25), to provide a row rate of 7812.5 Hz, a character line rate of 976.5 Hz, and a frame rate of 61.04 Hz.

14.4.4.3 Character Generator

The character generator simultaneously scans the RAM in sequence with the CRT display scan. The signals for the CRT display scan come from the horizontal and vertical character-sweep generators on the Scope Amplifier board (A7). The 12-bit binary counter provides the 9 bits of information stored in RAM. As each location in RAM is addressed, the 8-bit word stored at the location is latched into the 8-bit latch (U3) at the dot-matrix rate of 250 kHz. Seven of the bits are held in the latch and are applied to the character ROM (U2); the remaining bit is not used. An additional 3 bits from the 12-bit binary counter tells which row of dots is being scanned. Thus, the 10 bits being applied to the character ROM define a particular dot row of a particular character. The 8-bit pattern that defines this dot row is then available at the output of the character ROM. This output is parallel-loaded into the 8-bit shift register, U1. The 8 bits are serially shifted out on the CHAR GEN Z-AXIS line at a dot rate of 2 MHz. The 12-bit binary counter also provides synchronizing signals for the character-sweep generators on the A7 board. The horizontal and vertical character-sweep generators are reset and started by one-shots (U22A and U22B respectively). The horizontal one-shot enable is located at the end of a dot row. The vertical one-shot enable has two sources: the CHAR GEN RESET line for dual-display mode, and

the 12-bit binary counter end-of-frame for character display. Also provided is signal LINE 1 which signals the dual-display control on the Scope/DVM Control board that the first character line has been traced.

14.4.5 DTMF ENCODE/DECODE

ICs U36 and U37 contain all circuitry necessary to encode and decode dual tone multi frequency (DTMF) signals.

The processor uses four outputs (PA4 – PA7) from PIA U38 to instruct the DTMF encoder which tones to generate. When control line CB2 of PIA U38 is brought to a logic 1, the selected DTMF tone is transmitted.

Incoming DTMF signals appear at the decoder via the VERT FROM RNG SW line. Each received tone must have an amplitude of 19.5 to 615 mV rms with a minimum duration of 40 ms. Consecutive DTMF tones must be separated by at least 40 ms. The difference between high and low level tones must not exceed +10 dB.

After a valid tone has been received and decoded, U37 outputs a hexadecimal number representing the decoded signal, and brings the STROBE output to a logic 1. PIA U38 then reads the hexadecimal number and clears U37 by applying a logic 1 to its CLEAR line.

14.4.6 PRINTER PORT

U44 contains the circuitry to output data to a printer in accordance with the RS-232 standard protocol.

The processor transfers data to U44, where it is converted from parallel to serial format. U35 then converts the serial data from TTL levels to bipolar levels (+5 V/−5 V), as long as a logic 0 appears on pin 16 of U44.

Figure 14-3. Block Diagram

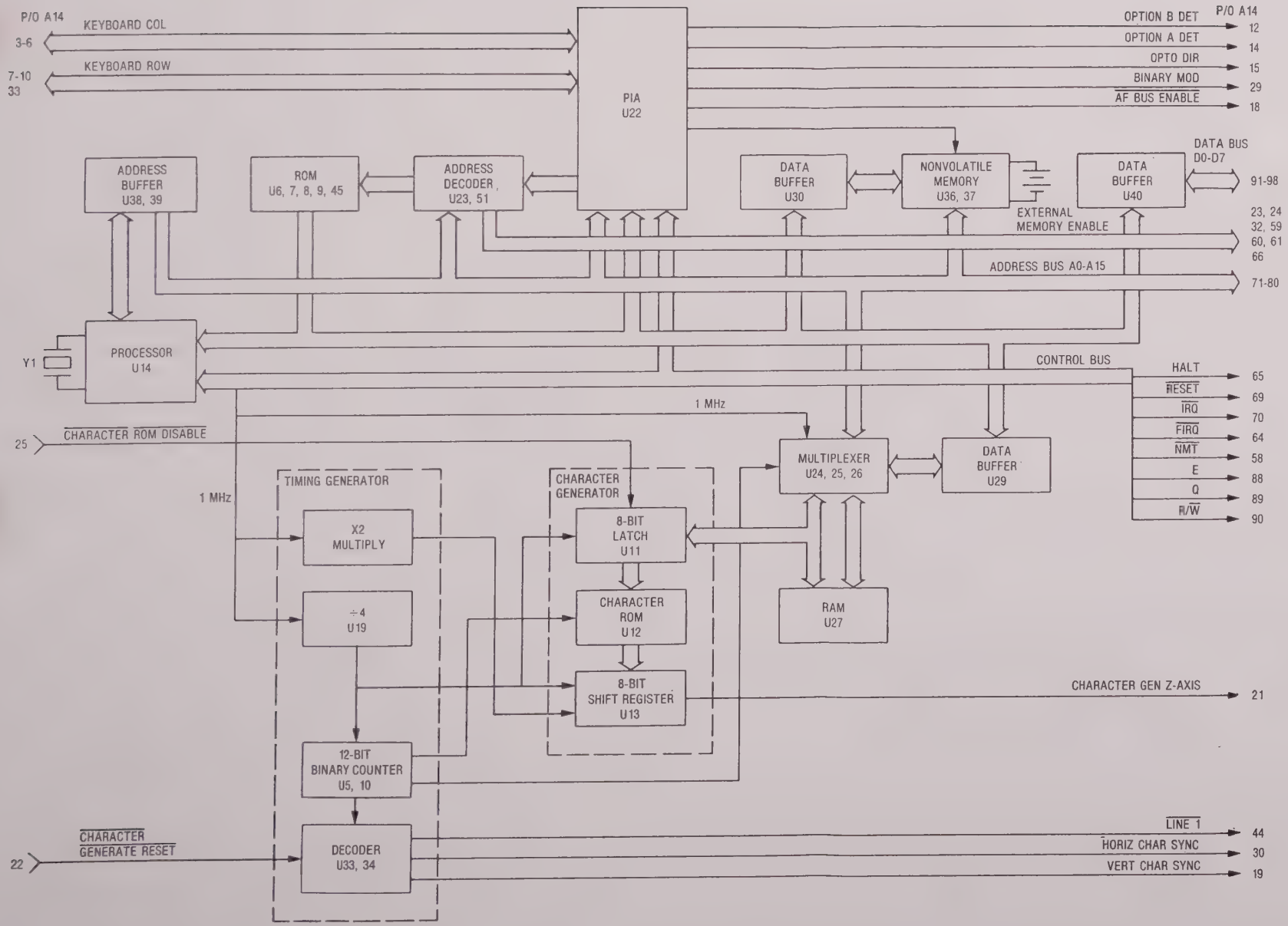

PROCESSOR BOARD (A14)

(RTC-1010A) 01-P22140E001

Figure 14-4a. Schematic (sheet 1 of 5)

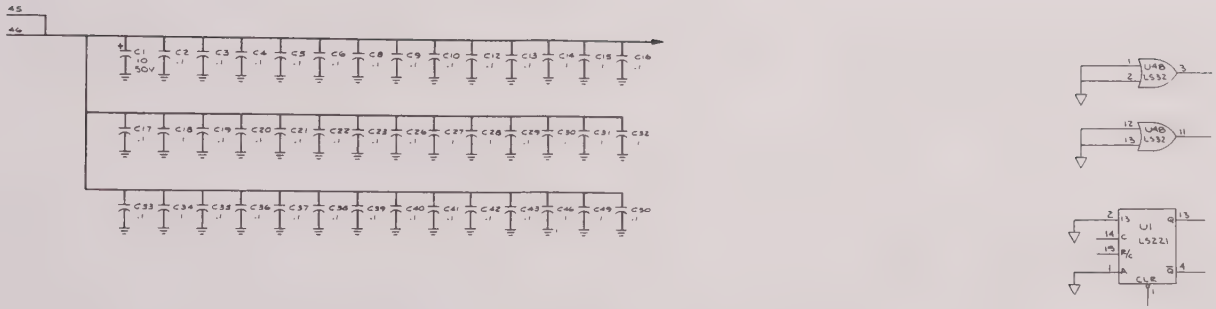

DEVICE	+5	GND	NO CONN
U1 74LS221	11, 16	1, 2, 8	3, 12, 13, 14, 15
U2 NOT USED			
U3 NOT USED			
U4 74LS32	14	7	
U5 74LS191	9, 10, 15, 16	4, 5, 8	13
U6 2764	28	14, 22	26
U7 2764	28	14, 22	26
U8 2764	28	14, 22	26
U9 2764	28	14, 22	26
U10 74LS393	14	7	
U11 74LS374	20	10	
U12 44502	21, 24	18, 19, 20	12
U13 74LS166	5, 16	1, 6, 8	
U14 MC6809P	7	1	
U15 NOT USED			
U16 NOT USED			
U17 74LS04	14	7	
U18 74LS260	14	4, 7, 2, 3	
U19 74LS74	14	7	
U20 74LS74	4, 5, 10, 19	7	6, 8
U21 74LS86	14	7	
U22 6821	20, 22	1	
U23 74LS139	16	8	
U24 74LS157	16	8, 15	
U25 74LS157	16	8, 15	
U26 74LS157	16	8, 15	
U27 6116	24	12, 18, 20	

DEVICE	+5	GND	NO CONN
U28 NOT USED			
U29 74LS245	20	10	
U30 74LS245	20	10	
U31 74LS123	14	7	
U32 NOT USED			
U33 74LS00	14	7	
U34 74LS123	9, 10, 11, 16	8	5, 13
U35 NOT USED			
U36 6514	18	9	
U37 6514	18	9	
U38 74LS244	20	10	
U39 74LS244	20	10	
U40 74LS245	20	10	
U41 NOT USED			
U42 74LS04	14	7	
U43 74LS11	14	7, 1, 2, 13	12
U44 74LS86	5, 10, 13, 14	7	
U45 2764	28	14, 22	26
U46 NOT USED			
U47 74LS00	14	7	
U48 74LS32	14	1, 2, 12, 13	3, 11
U49 74LS00	14	7	
U50 74LS139	16	8	
U51 74LS139	16	8	
U52 74LS30	2, 6, 12, 14	4, 7, 3, 12	9, 10, 13

WARNING:
STATIC-SENSITIVE PARTS
HANDLE APPROPRIATELY

Figure 14-4b. Schematic (sheet 2 of 5)

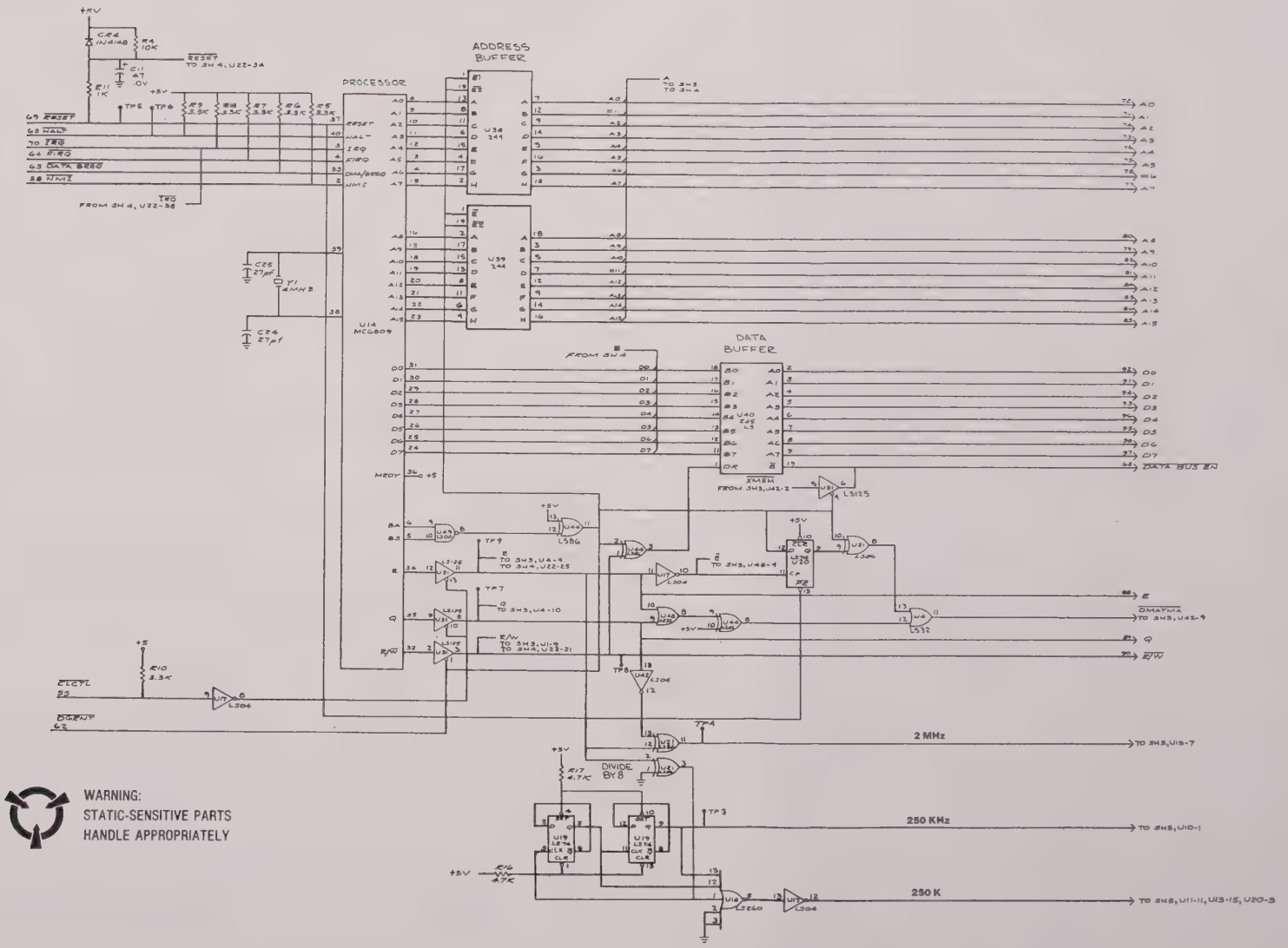

(RTC-1010A) 01-P22140E001

Figure 14-4c. Schematic (sheet 3 of 5)

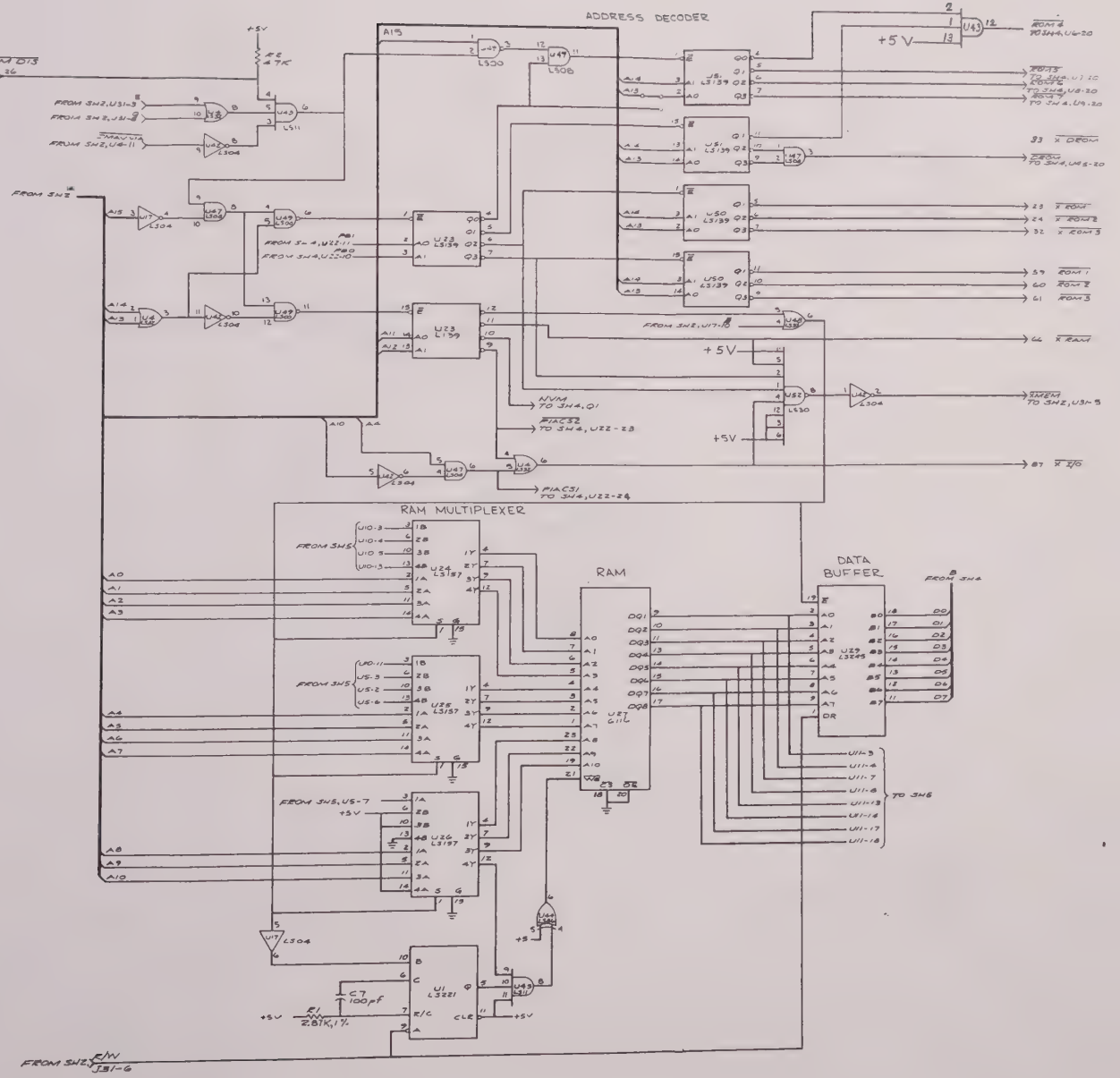

WARNING:
STATIC-SENSITIVE PARTS
HANDLE APPROPRIATELY

Figure 14-4d. Schematic (sheet 4 of 5)

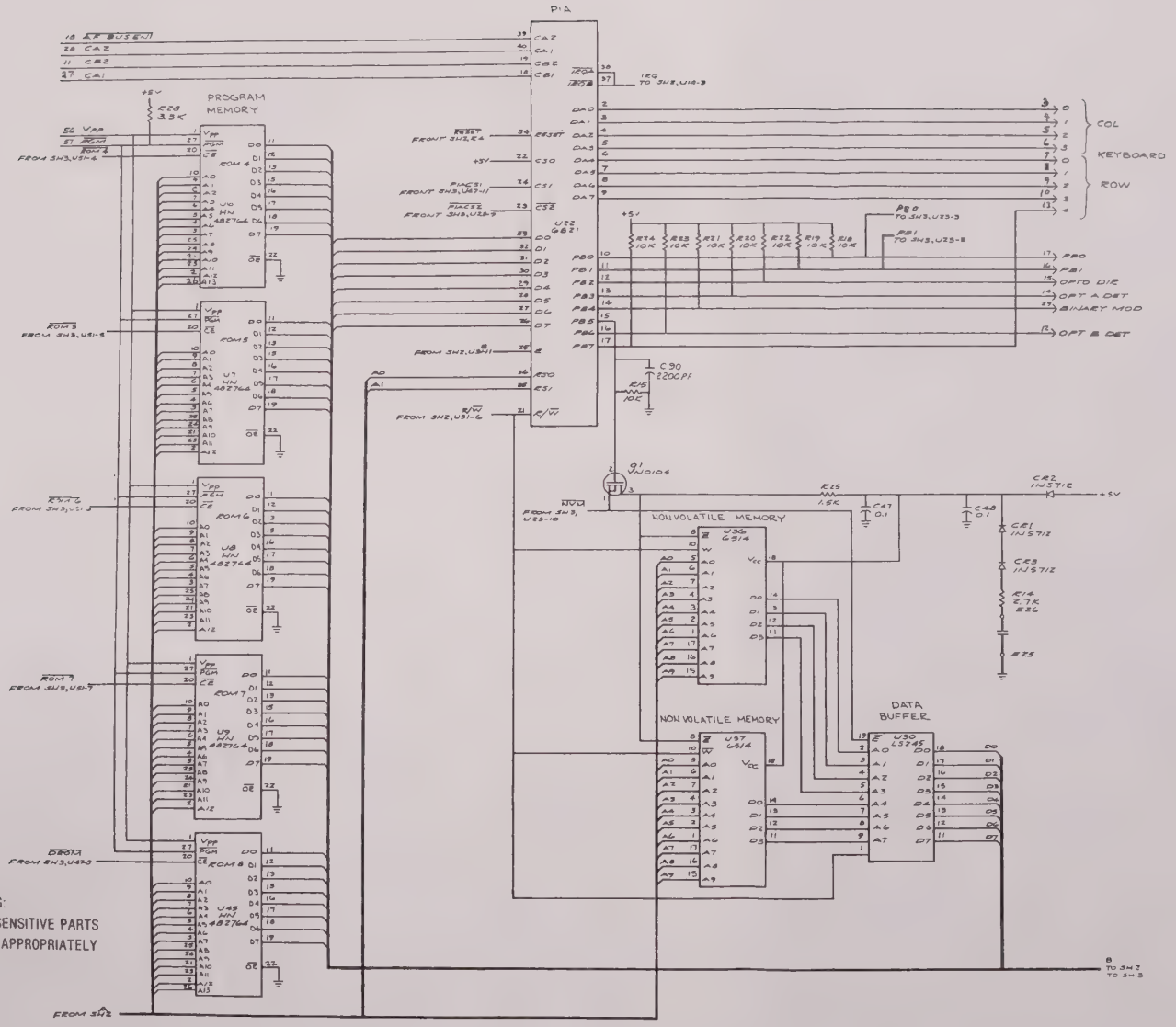

PROCESSOR BOARD (A14)

(RTC-1010A) 01-P22140E001

Figure 14-4e. Schematic (sheet 5 of 5)

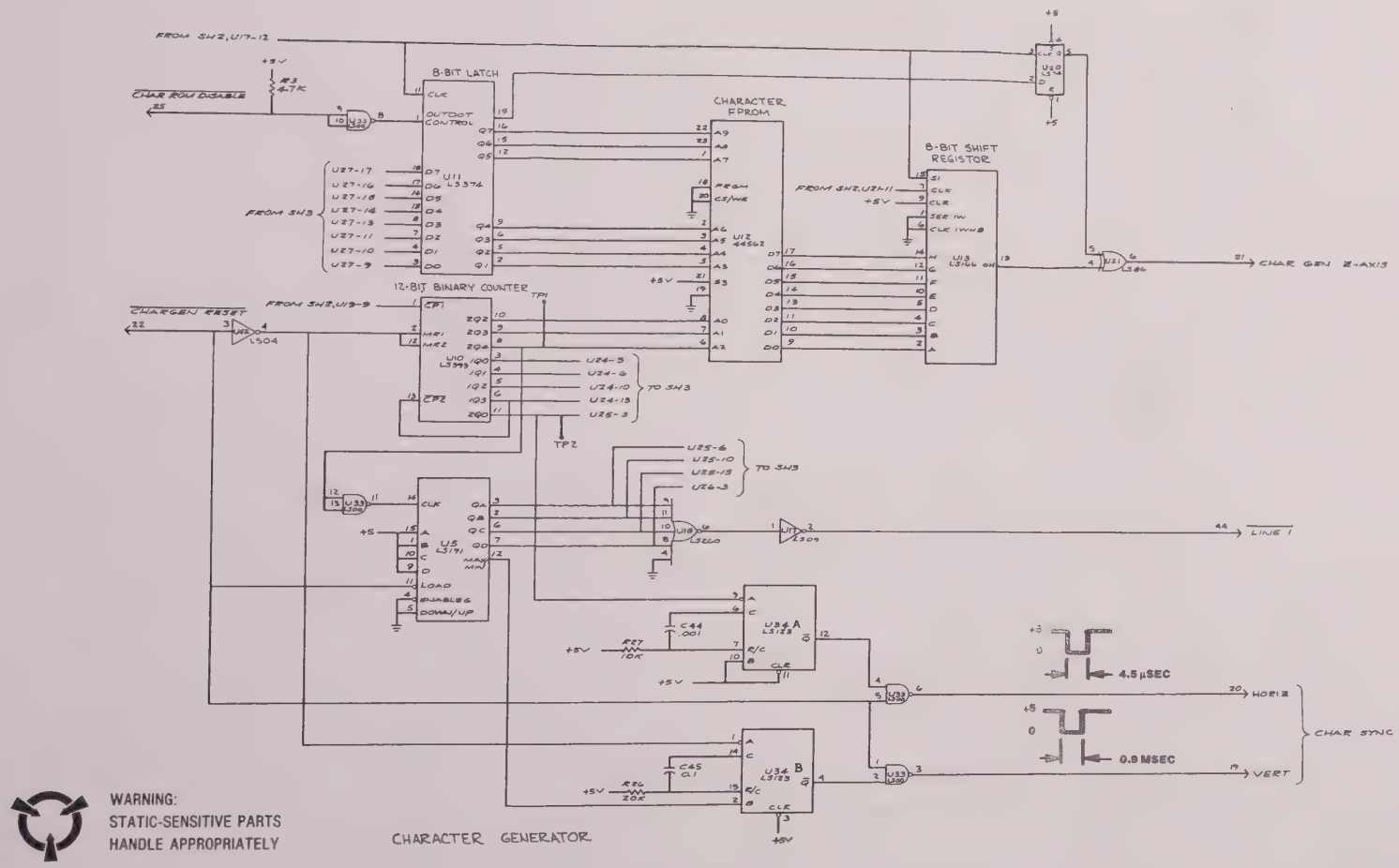

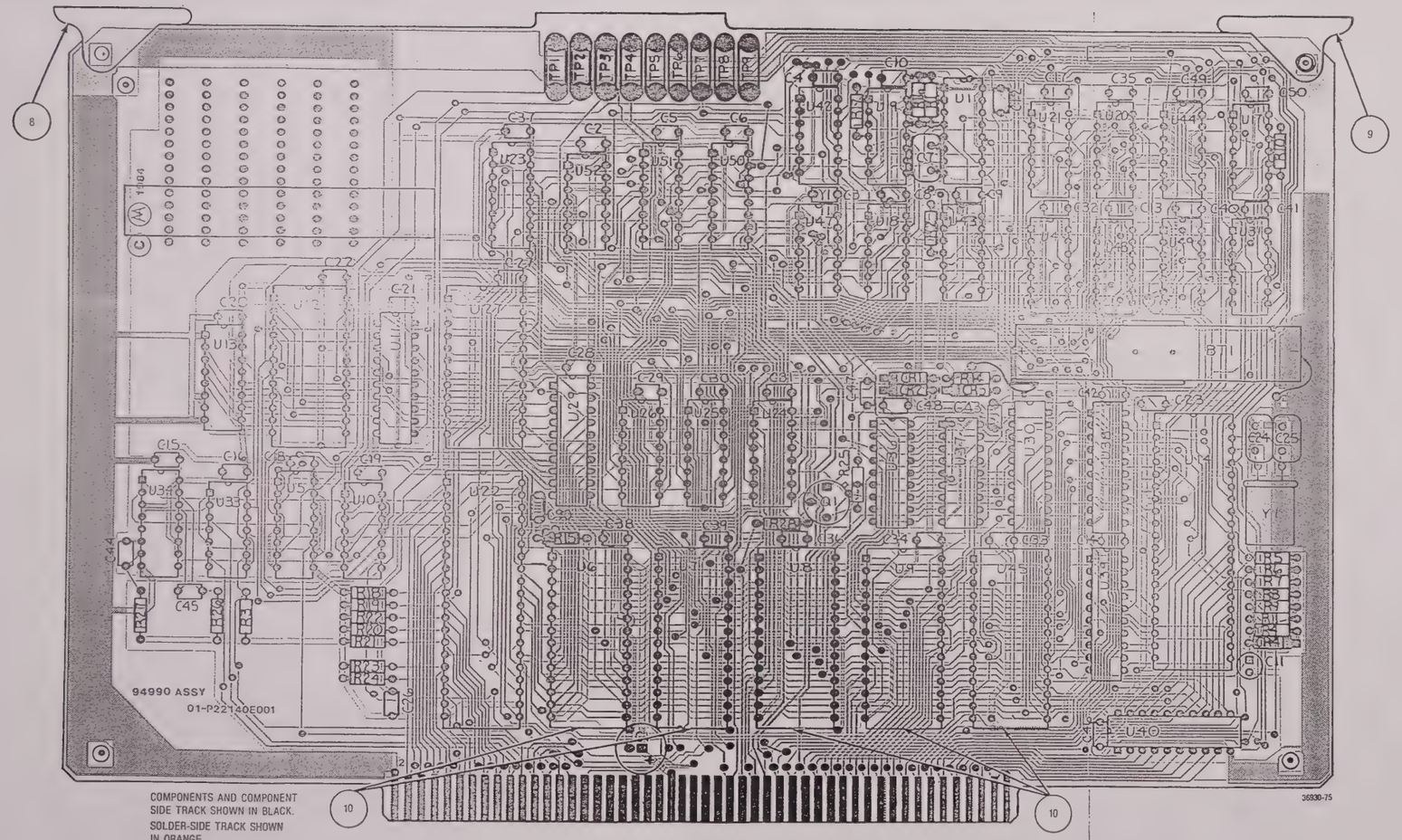

COMPONENTS AND COMPONENT SIDE TRACK SHOWN IN BLACK.
SOLDER-SIDE TRACK SHOWN IN ORANGE

PROCESSOR BOARD (A14)
RTC-1010A

Find No.	Qty. Req.	Part No.	Nomenclature	Part Value
008	1	45-80339B28	CARD EJECTOR	
009	1	45-80339B33	CARD EJECTOR	MARKED
010	5	09-80339B81	SOCKET	28 PIN
BT001	1	60-80396A01	BATTERY,LITHIUM-MANGANESE	3V
C 001	1	23-80341B15	CAPACITOR	10UF-20-50
C 002	1	21-80342B10	CAPACITOR	.1UF-20-50
C 003	1	21-80342B10	CAPACITOR	.1UF-20-50
C 004	1	21-80342B10	CAPACITOR	.1UF-20-50
C 005	1	21-80342B10	CAPACITOR	.1UF-20-50
C 006	1	21-80342B10	CAPACITOR	.1UF-20-50
C 007	1	21-00850118	CAPACITOR	100PF-5-500
C 008	1	21-80342B10	CAPACITOR	.1UF-20-50
C 009	1	21-80342B10	CAPACITOR	.1UF-20-50
C 010	1	21-80342B10	CAPACITOR	.1UF-20-50
C 011	1	23-84665F25	CAPACITOR	47UF-20-10
C 012	1	21-80342B10	CAPACITOR	.1UF-20-50
C 013	1	21-80342B10	CAPACITOR	.1UF-20-50
C 014	1	21-80342B10	CAPACITOR	.1UF-20-50
C 015	1	21-80342B10	CAPACITOR	.1UF-20-50
C 016	1	21-80342B10	CAPACITOR	.1UF-20-50
C 017	1	21-80342B10	CAPACITOR	.1UF-20-50
C 018	1	21-80342B10	CAPACITOR	.1UF-20-50
C 019	1	21-80342B10	CAPACITOR	.1UF-20-50
C 020	1	21-80342B10	CAPACITOR	.1UF-20-50
C 021	1	21-80342B10	CAPACITOR	.1UF-20-50
C 022	1	21-80342B10	CAPACITOR	.1UF-20-50
C 023	1	21-80342B10	CAPACITOR	.1UF-20-50
C 024	1	21-80339B14	CAPACITOR	24PF-5-500
C 025	1	21-80339B14	CAPACITOR	24PF-5-500
C 026	1	21-80342B10	CAPACITOR	.1UF-20-50
C 027	1	21-80342B10	CAPACITOR	.1UF-20-50
C 028	1	21-80342B10	CAPACITOR	.1UF-20-50
C 029	1	21-80342B10	CAPACITOR	.1UF-20-50
C 030	1	21-80342B10	CAPACITOR	.1UF-20-50
C 031	1	21-80342B10	CAPACITOR	.1UF-20-50
C 032	1	21-80342B10	CAPACITOR	.1UF-20-50
C 033	1	21-80342B10	CAPACITOR	.1UF-20-50
C 034	1	21-80342B10	CAPACITOR	.1UF-20-50
C 035	1	21-80342B10	CAPACITOR	.1UF-20-50
C 036	1	21-80342B10	CAPACITOR	.1UF-20-50
C 037	1	21-80342B10	CAPACITOR	.1UF-20-50
C 038	1	21-80342B10	CAPACITOR	.1UF-20-50
C 039	1	21-80342B10	CAPACITOR	.1UF-20-50
C 040	1	21-80342B10	CAPACITOR	.1UF-20-50
C 041	1	21-80342B10	CAPACITOR	.1UF-20-50
C 042	1	21-80342B10	CAPACITOR	.1UF-20-50
C 043	1	21-80342B10	CAPACITOR	.1UF-20-50
C 044	1	21-80341B93	CAPACITOR	1000PF-20-100
C 045	1	21-80341B97	CAPACITOR	.1UF-20-100
C 046	1	21-80342B10	CAPACITOR	.1UF-20-50
C 047	1	21-80342B10	CAPACITOR	.1UF-20-50
C 048	1	21-80342B10	CAPACITOR	.1UF-20-50
C 049	1	21-80342B10	CAPACITOR	.1UF-20-50
C 050	1	21-80342B10	CAPACITOR	.1UF-20-50
C 090	1	21-80341B99	CAPACITOR	2200PF-20-100
CR001	1	48-80396A27	DIODE	
CR002	1	48-80396A27	DIODE	
CR003	1	48-80396A27	DIODE	
CR004	1	48-84463K02	DIODE	
Q 001	1	48-80341B22	TRANSISTOR	
R 001	1	06-10621C39	RESISTOR	2.87K-1-1/4
R 002	1	06-11009C65	RESISTOR	4.7K-5-1/4
R 003	1	06-11009C65	RESISTOR	4.7K-5-1/4
R 004	1	06-11009C73	RESISTOR	10K-5-1/4
R 005	1	06-11009C61	RESISTOR	3.3K-5-1/4
R 006	1	06-11009C61	RESISTOR	3.3K-5-1/4
R 007	1	06-11009C61	RESISTOR	3.3K-5-1/4
R 008	1	06-11009C61	RESISTOR	3.3K-5-1/4
R 009	1	06-11009C61	RESISTOR	3.3K-5-1/4
R 010	1	06-11009C61	RESISTOR	3.3K-5-1/4
R 011	1	06-11009C49	RESISTOR	1K-5-1/4
R 014	1	06-11009C59	RESISTOR	2.7K-5-1/4
R 015	1	06-11009C73	RESISTOR	10K-5-1/4
R 016	1	06-11009C65	RESISTOR	4.7K-5-1/4
R 017	1	06-11009C65	RESISTOR	4.7K-5-1/4
R 018	1	06-11009C73	RESISTOR	10K-5-1/4
R 019	1	06-11009C73	RESISTOR	10K-5-1/4
R 020	1	06-11009C73	RESISTOR	10K-5-1/4
R 021	1	06-11009C73	RESISTOR	10K-5-1/4
R 022	1	06-11009C73	RESISTOR	10K-5-1/4
R 023	1	06-11009C73	RESISTOR	10K-5-1/4
R 024	1	06-11009C73	RESISTOR	10K-5-1/4
R 025	1	06-11009C53	RESISTORS	1.5K-5-1/4

PROCESSOR BOARD (A14)
(RTC-1010A) 01-P22140E001

Figure 14-5. Printed Wiring Board Assembly and Parts List

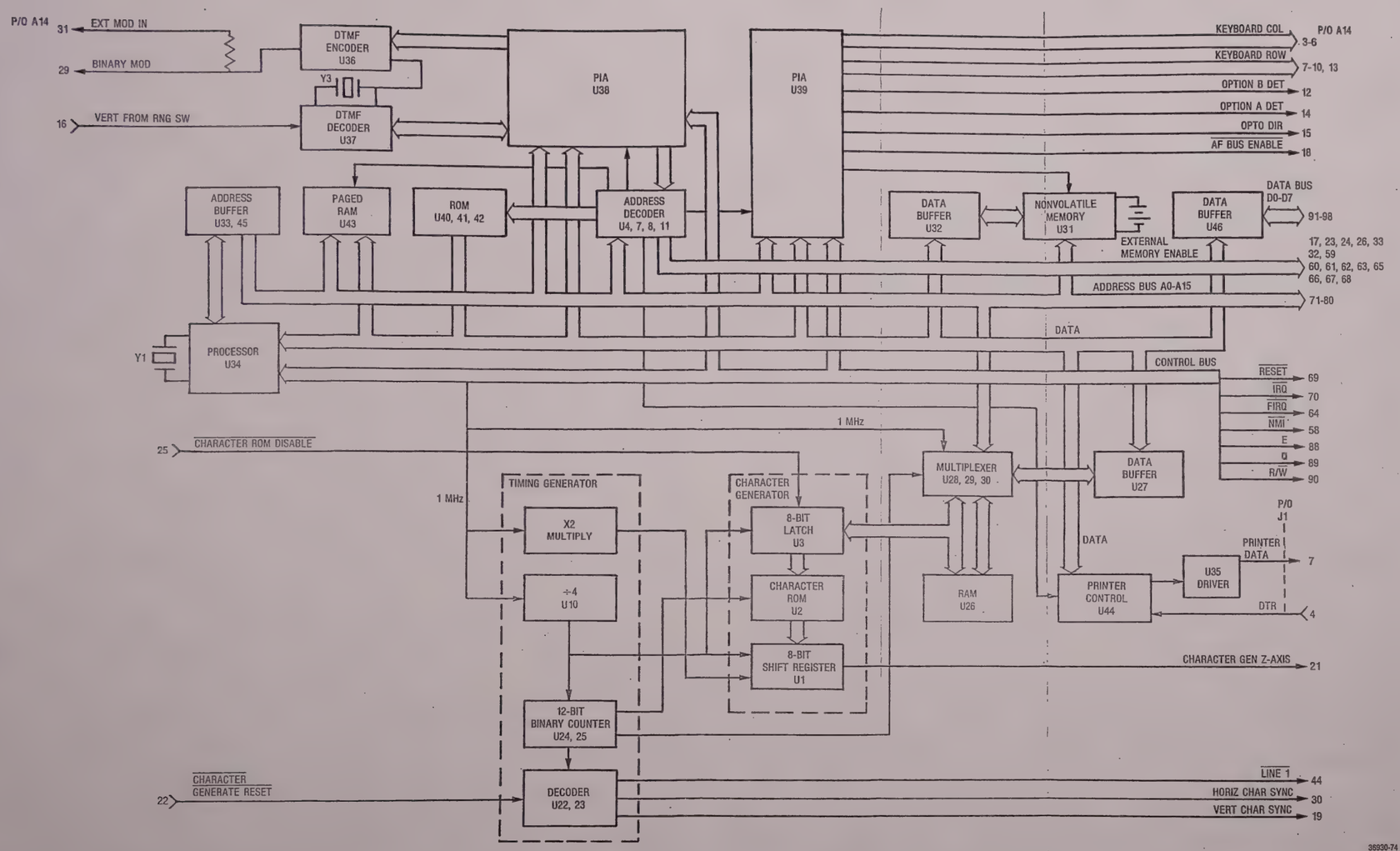

PROCESSOR BOARD (A14)
(RTC-1010A) 01-P29050H001
Figure 14-6. Block Diagram

Figure 14-7b. Schematic (sheet 2 of 6)

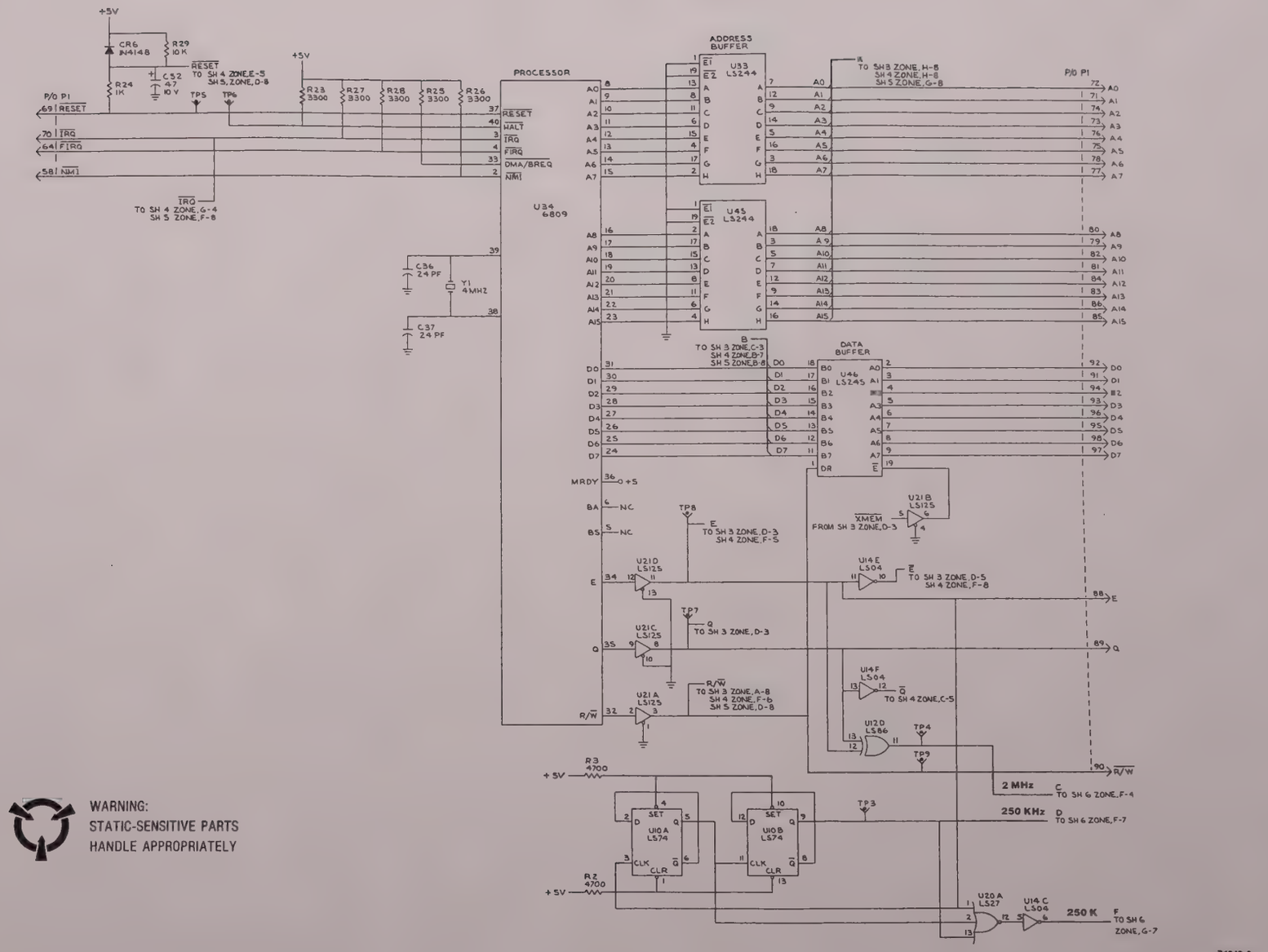

WARNING:
STATIC-SENSITIVE PARTS
HANDLE APPROPRIATELY

PROCESSOR BOARD (A14)

(RTC-1010A) 01-P29050H001

Figure 14-7c. Schematic (sheet 3 of 6)

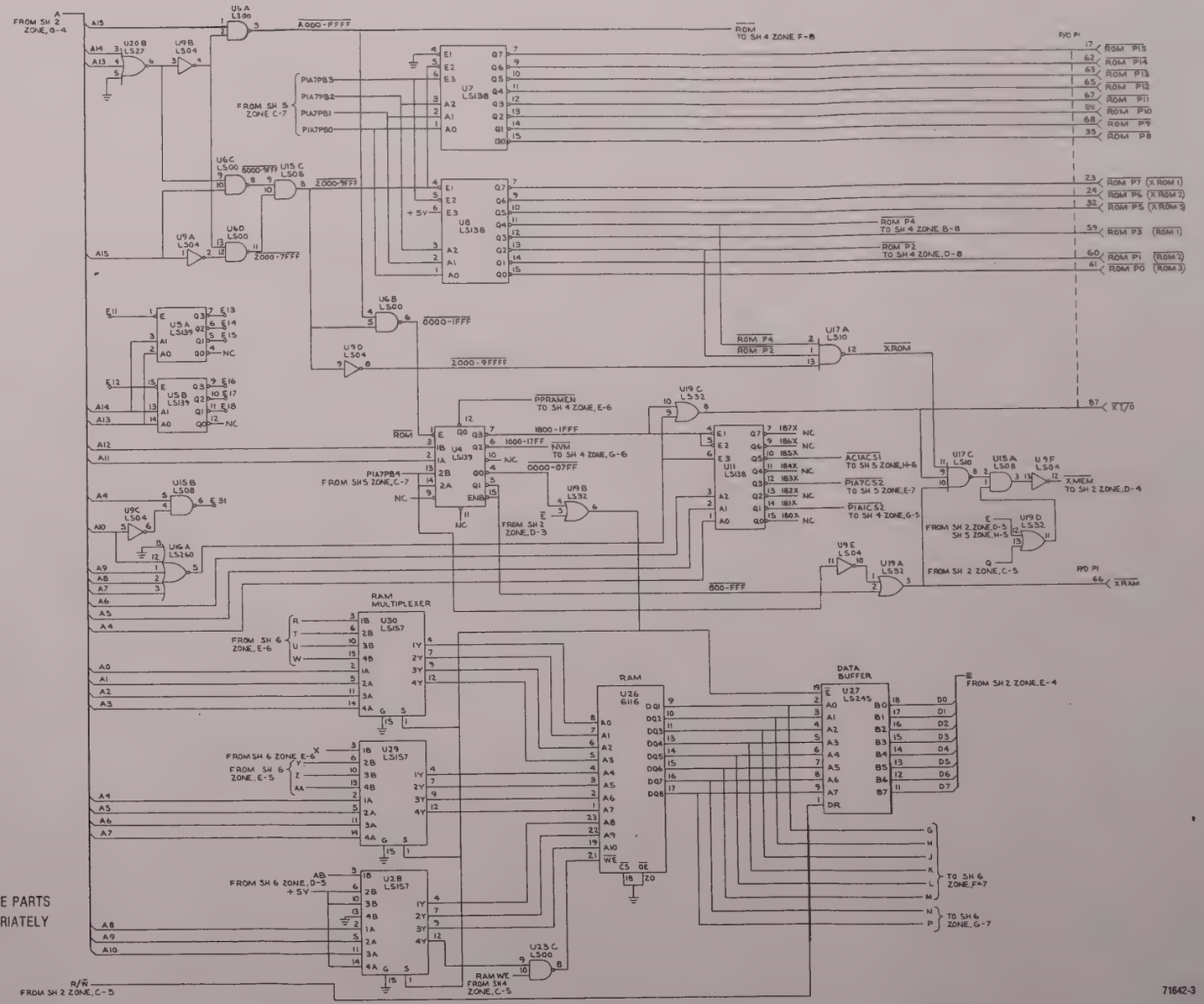

WARNING:
STATIC-SENSITIVE PARTS
HANDLE APPROPRIATELY

Figure 14-7d. Schematic (sheet 4 of 6)

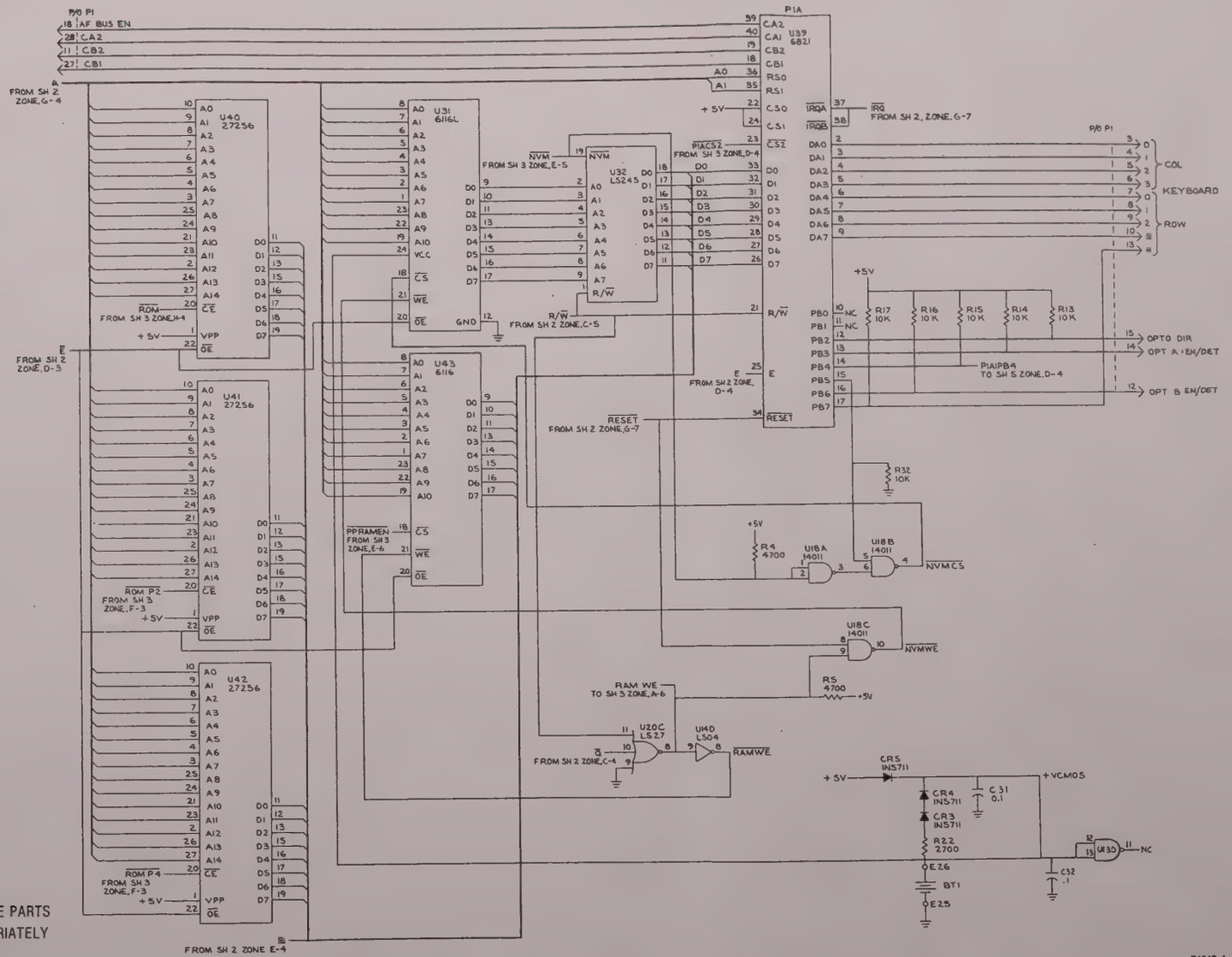

71642-4

WARNING:
STATIC-SENSITIVE PARTS
HANDLE APPROPRIATELY

Figure 14-7e. Schematic (sheet 5 of 6)

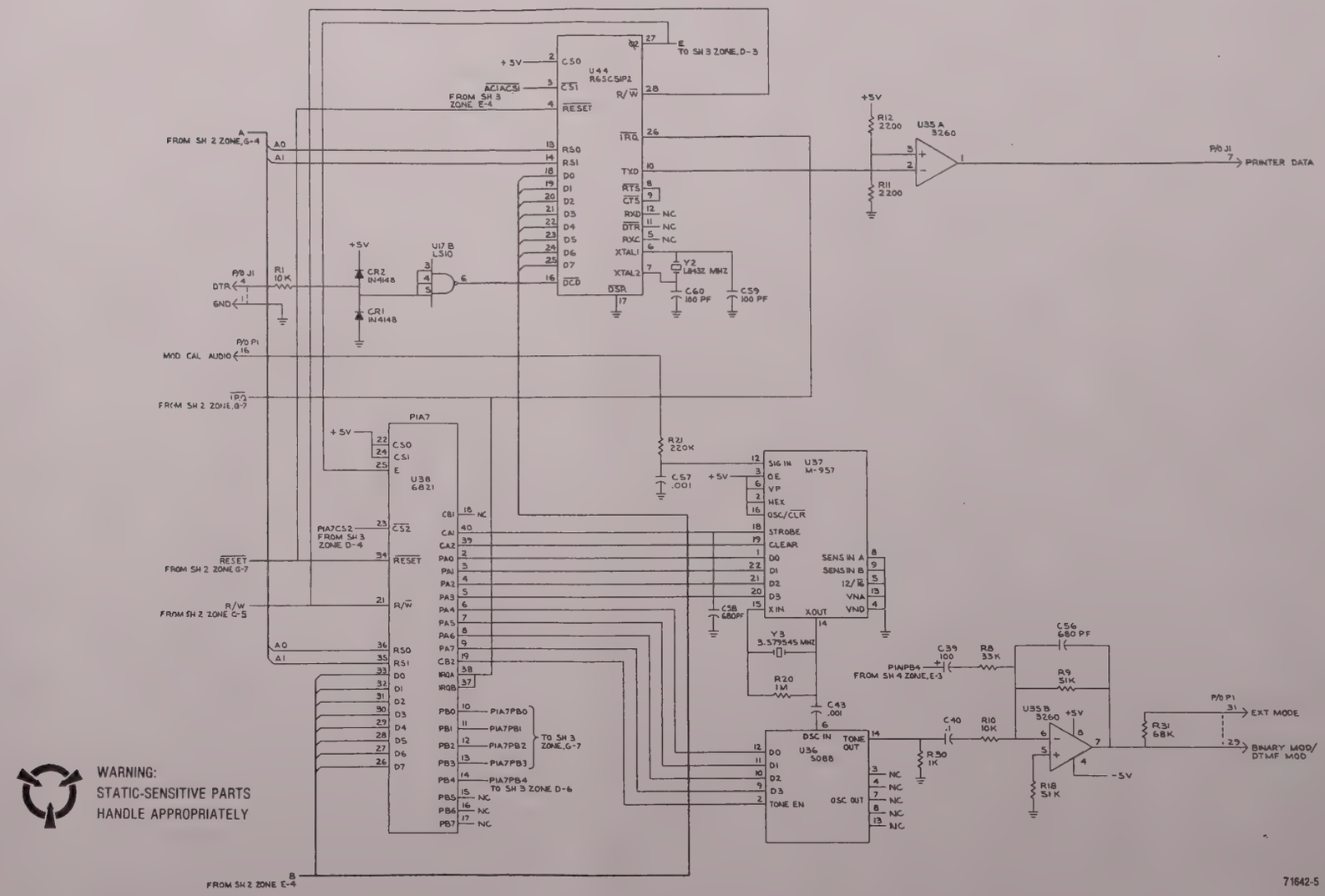

Figure 14-7f. Schematic (sheet 6 of 6)

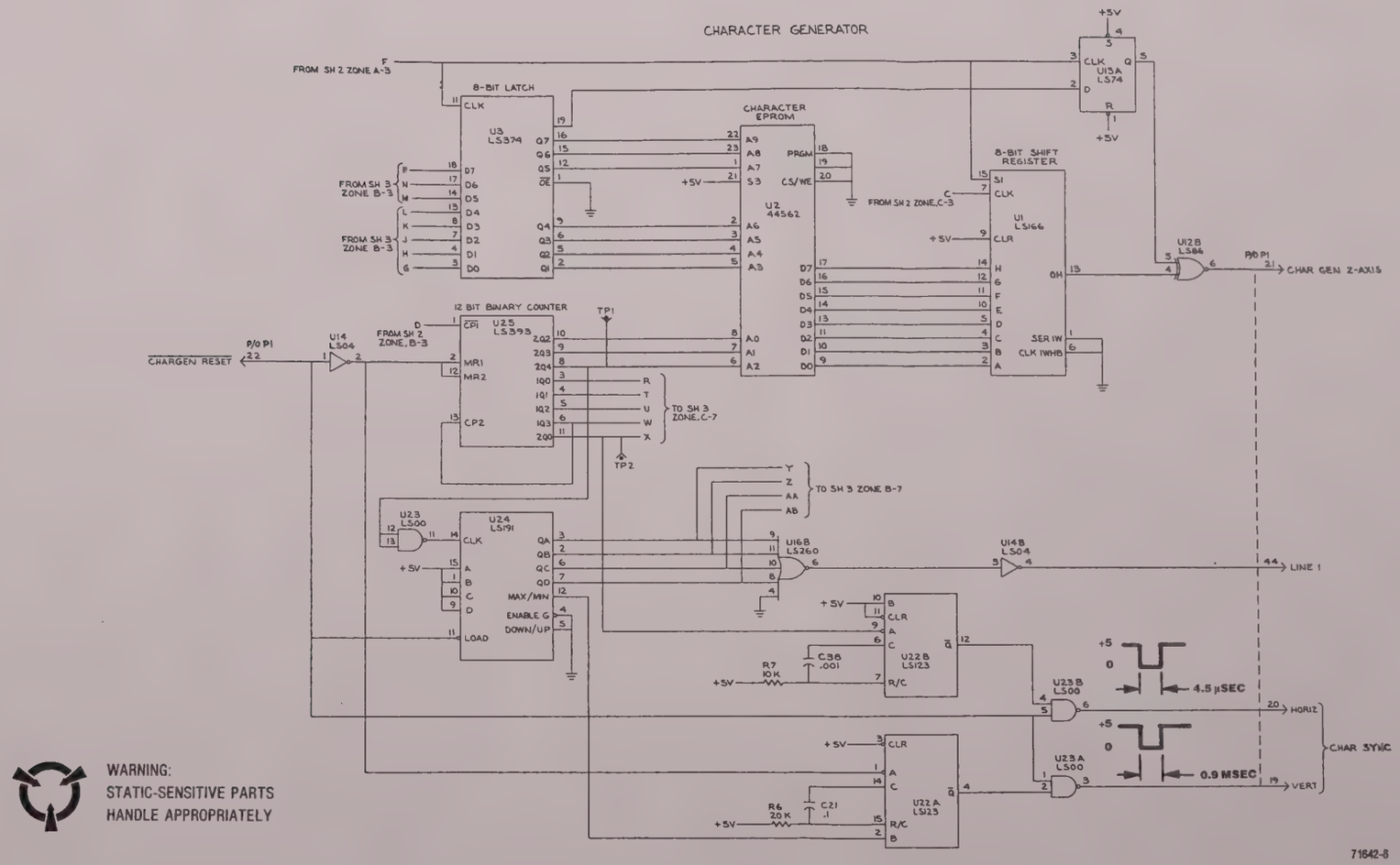

WARNING:
STATIC-SENSITIVE PARTS
HANDLE APPROPRIATELY

PROCESSOR BOARD (A14)

(RTC-1010A) 01-P290500H001

Figure 14-8. Printed Wiring Board Assembly and Parts List

PROCESSOR BOARD (A14)
RTC-1010A

Find No.	Qty. Req.	Part No.	Nomenclature	Part Value
008	1	45-80339B28	CARD EJECTOR	
009	1	45-80339B33	CARD EJECTOR	MARKED
010	5	09-80339B81	SOCKET	28 PIN
BT001	1	60-80396A01	BATTERY,LITHIUM-MANGANESE	3V
C 001	1	23-80341B15	CAPACITOR	10UF-20-50
C 002	1	21-80342B10	CAPACITOR	.1UF-20-50
C 003	1	21-80342B10	CAPACITOR	.1UF-20-50
C 004	1	21-80342B10	CAPACITOR	.1UF-20-50
C 005	1	21-80342B10	CAPACITOR	.1UF-20-50
C 006	1	21-80342B10	CAPACITOR	.1UF-20-50
C 007	1	21-00850118	CAPACITOR	100PF-5-500
C 008	1	21-80342B10	CAPACITOR	.1UF-20-50
C 009	1	21-80342B10	CAPACITOR	.1UF-20-50
C 010	1	21-80342B10	CAPACITOR	.1UF-20-50
C 011	1	23-84665F25	CAPACITOR	47UF-20-10
C 012	1	21-80342B10	CAPACITOR	.1UF-20-50
C 013	1	21-80342B10	CAPACITOR	.1UF-20-50
C 014	1	21-80342B10	CAPACITOR	.1UF-20-50
C 015	1	21-80342B10	CAPACITOR	.1UF-20-50
C 016	1	21-80342B10	CAPACITOR	.1UF-20-50
C 017	1	21-80342B10	CAPACITOR	.1UF-20-50
C 018	1	21-80342B10	CAPACITOR	.1UF-20-50
C 019	1	21-80342B10	CAPACITOR	.1UF-20-50
C 020	1	21-80342B10	CAPACITOR	.1UF-20-50
C 021	1	21-80342B10	CAPACITOR	.1UF-20-50
C 022	1	21-80342B10	CAPACITOR	.1UF-20-50
C 023	1	21-80342B10	CAPACITOR	.1UF-20-50
C 024	1	21-80339B14	CAPACITOR	24PF-5-500
C 025	1	21-80339B14	CAPACITOR	24PF-5-500
C 026	1	21-80342B10	CAPACITOR	.1UF-20-50
C 027	1	21-80342B10	CAPACITOR	.1UF-20-50
C 028	1	21-80342B10	CAPACITOR	.1UF-20-50
C 029	1	21-80342B10	CAPACITOR	.1UF-20-50
C 030	1	21-80342B10	CAPACITOR	.1UF-20-50
C 031	1	21-80342B10	CAPACITOR	.1UF-20-50
C 032	1	21-80342B10	CAPACITOR	.1UF-20-50
C 033	1	21-80342B10	CAPACITOR	.1UF-20-50
C 034	1	21-80342B10	CAPACITOR	.1UF-20-50
C 035	1	21-80342B10	CAPACITOR	.1UF-20-50
C 036	1	21-80342B10	CAPACITOR	.1UF-20-50
C 037	1	21-80342B10	CAPACITOR	.1UF-20-50
C 038	1	21-80342B10	CAPACITOR	.1UF-20-50
C 039	1	21-80342B10	CAPACITOR	.1UF-20-50
C 040	1	21-80342B10	CAPACITOR	.1UF-20-50
C 041	1	21-80342B10	CAPACITOR	.1UF-20-50
C 042	1	21-80342B10	CAPACITOR	.1UF-20-50
C 043	1	21-80342B10	CAPACITOR	.1UF-20-50
C 044	1	21-80341B93	CAPACITOR	1000PF-20-100
C 045	1	21-80341B97	CAPACITOR	.1UF-20-100
C 046	1	21-80342B10	CAPACITOR	.1UF-20-50
C 047	1	21-80342B10	CAPACITOR	.1UF-20-50
C 048	1	21-80342B10	CAPACITOR	.1UF-20-50
C 049	1	21-80342B10	CAPACITOR	.1UF-20-50
C 050	1	21-80342B10	CAPACITOR	.1UF-20-50
C 090	1	21-80341B99	CAPACITOR	2200PF-20-100
CR001	1	48-80396A27	DIODE	
CR002	1	48-80396A27	DIODE	
CR003	1	48-80396A27	DIODE	
CR004	1	48-84463K02	DIODE	
Q 001	1	48-80341B22	TRANSISTOR	
R 001	1	06-10621C39	RESISTOR	2.87K-1-1/4
R 002	1	06-11009C55	RESISTOR	4.7K-5-1/4
R 003	1	06-11009C65	RESISTOR	4.7K-5-1/4
R 004	1	06-11009C73	RESISTOR	10K-5-1/4
R 005	1	06-11009C61	RESISTOR	3.3K-5-1/4
R 006	1	06-11009C61	RESISTOR	3.3K-5-1/4
R 007	1	06-11009C61	RESISTOR	3.3K-5-1/4
R 008	1	06-11009C61	RESISTOR	3.3K-5-1/4
R 009	1	06-11009C61	RESISTOR	3.3K-5-1/4
R 010	1	06-11009C61	RESISTOR	3.3K-5-1/4
R 011	1	06-11009C49	RESISTOR	1K-5-1/4
R 014	1	06-11009C59	RESISTOR	2.7K-5-1/4
R 015	1	06-11009C73	RESISTOR	10K-5-1/4
R 016	1	06-11009C65	RESISTOR	4.7K-5-1/4
R 017	1	06-11009C65	RESISTOR	4.7K-5-1/4
R 018	1	06-11009C73	RESISTOR	10K-5-1/4
R 019	1	06-11009C73	RESISTOR	10K-5-1/4
R 020	1	06-11009C73	RESISTOR	10K-5-1/4
R 021	1	06-11009C73	RESISTOR	10K-5-1/4
R 022	1	06-11009C73	RESISTOR	10K-5-1/4
R 023	1	06-11009C73	RESISTOR	10K-5-1/4
R 024	1	06-11009C73	RESISTOR	10K-5-1/4
R 025	1	06-11009C53	RESISTORS	1.5K-5-1/4

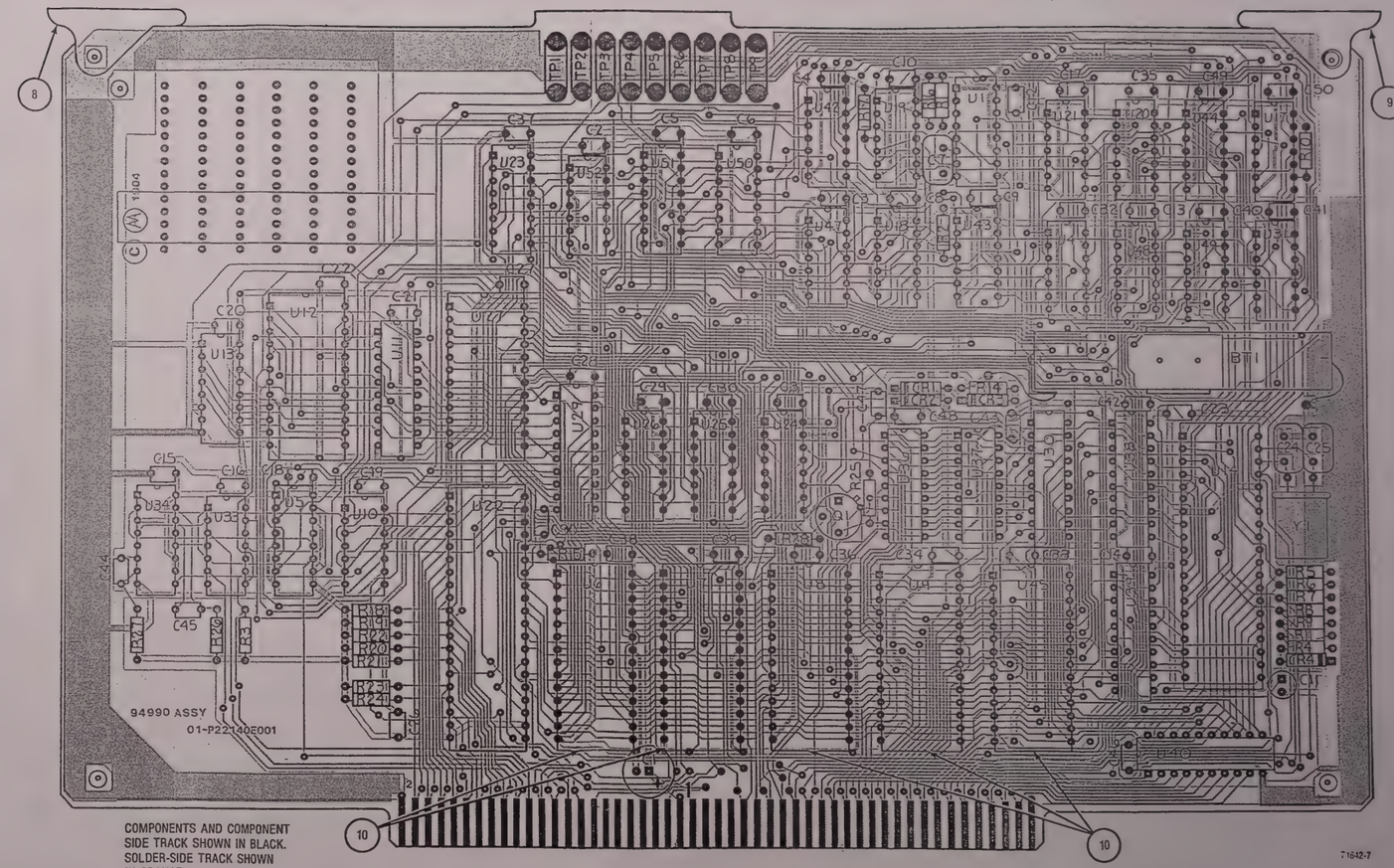

COMPONENTS AND COMPONENT SIDE TRACK SHOWN IN BLACK. SOLDER-SIDE TRACK SHOWN IN ORANGE.

PROCESSOR BOARD (A14) (Cont)

RTC-1010A 01-P29050H001

Find No.	Qty. Req.	Part No.	Nomenclature	Part Value
R 026	1	06-11009C80	RESISTOR	20K-5-1/4
R 027	1	06-11009C73	RESISTOR	10K-5-1/4
R 028	1	06-11009C61	RESISTOR	3.3K-5-1/4
TP001	1	09-80331A88	JACK	WHITE
TP002	1	09-80331A88	JACK	WHITE
TP003	1	09-80331A88	JACK	WHITE
TP004	1	09-80331A88	JACK	WHITE
TP005	1	09-80331A88	JACK	WHITE
TP006	1	09-80331A88	JACK	WHITE
TP007	1	09-80331A88	JACK	WHITE
TP008	1	09-80331A88	JACK	WHITE
TP009	1	09-80331A88	JACK	WHITE
U 001	1	51-05722G02	INTEGRATED CIRCUIT	
U 004	1	51-84561L36	INTEGRATED CIRCUIT	
U 005	1	51-80368A74	INTEGRATED CIRCUIT	SN74LS191N
U 006	1	51-90006B01	INTEGRATED CIRCUIT,	EPROM
U 007	1	51-90006B01	INTEGRATED CIRCUIT,	EPROM
U 008	1	51-90006B01	INTEGRATED CIRCUIT,	EPROM
U 009	1	51-90006B01	INTEGRATED CIRCUIT,	EPROM
U 010	1	51-82609M30	INTEGRATED CIRCUIT	
U 011	1	51-82609M67	INTEGRATED CIRCUIT	
U 012	1	51-80340B13	INTEGRATED CIRCUIT	
U 013	1	51-82609M53	INTEGRATED CIRCUIT	
U 014	1	51-80340B21	INTEGRATED CIRCUIT	
U 017	1	51-84561L03	INTEGRATED CIRCUIT	
U 018	1	51-82609M61	INTEGRATED CIRCUIT	
U 019	1	51-83627M93	INTEGRATED CIRCUIT	
U 020	1	51-83627M93	INTEGRATED CIRCUIT	
U 021	1	51-82609M79	INTEGRATED CIRCUIT	
U 022	1	51-82807K20	INTEGRATED CIRCUIT	
U 023	1	51-84561L42	INTEGRATED CIRCUIT	
U 024	1	51-84561L48	INTEGRATED CIRCUIT	
U 025	1	51-84561L48	INTEGRATED CIRCUIT	
U 026	1	51-84561L48	INTEGRATED CIRCUIT	
U 027	1	51-80339B86	INTEGRATED CIRCUIT	CMOS RAM
U 029	1	51-82609M57	INTEGRATED CIRCUIT	
U 030	1	51-82609M57	INTEGRATED CIRCUIT	
U 031	1	51-82609M48	INTEGRATED CIRCUIT	
U 033	1	51-84561L04	INTEGRATED CIRCUIT	
U 034	1	51-84561L11	INTEGRATED CIRCUIT	
U 036	1	51-80396A21	INTEGRATED CIRCUIT	CMOS RAM
U 037	1	51-80396A21	INTEGRATED CIRCUIT	CMOS RAM
U 038	1	51-82609M56	INTEGRATED CIRCUIT	
U 039	1	51-82609M56	INTEGRATED CIRCUIT	
U 040	1	51-82609M57	INTEGRATED CIRCUIT	
U 042	1	51-84561L03	INTEGRATED CIRCUIT	
U 043	1	51-84561L44	INTEGRATED CIRCUIT	
U 044	1	51-82609M79	INTEGRATED CIRCUIT	
U 045	1	51-80339B89	INTEGRATED CIRCUIT	EPROM
U 047	1	51-84561L07	INTEGRATED CIRCUIT	
U 048	1	51-84561L36	INTEGRATED CIRCUIT	
U 049	1	51-84561L04	INTEGRATED CIRCUIT	
U 050	1	51-84561L42	INTEGRATED CIRCUIT	
U 051	1	51-84561L42	INTEGRATED CIRCUIT	
U 052	1	51-84561L39	INTEGRATED CIRCUIT	
Y 001	1	48-80346A06	CRYSTAL	4.0 MHZ

SECTION 15.
FRONT-PANEL INTERFACE BOARD (A15)

15.1 DESCRIPTION

The Front-Panel Interface board provides two system functions. The first of these is to interface the system's Processor board (A14) with other system modules: primarily the Receiver board (A8), the Front-Panel Interface board itself, the RF Input module (A17), and the Front Panel (A18). The second function is to provide an analog interface between 1) external signals or internal-modulation/demodulation signals and 2) the basic measurement functions in the System Analyzer, the DVM, the scope, and the frequency counter.

A block diagram of the Front-Panel Interface board is shown at the end of this section in Figure 15-1, a schematic in Figure 15-2, and the printed wiring board assembly and parts list in Figure 15-3.

15.1.1 PROCESSOR-CONTROL INTERFACE

Control information for the front panel is carried by the AF DATA BUS in 4-bit groups. Information that the microprocessor reads from the Front-Panel Interface includes encoded data from the RF ATTN 0-130 and horizontal SWP SEL inputs, data from the vertical RNG SEL INPUTS, and data from other miscellaneous inputs. Information that the microprocessor sends to the Front-Panel Interface includes data that controls the input switches (Q2, Q3, Q6), the range attenuator (Q4, Q5, Q7, Q8), and the LEDs on the front panel.

Data is transferred to the AF DATA BUS by 3-state input buffers U13, U17, U19, and U20, and it is transferred from the AF DATA BUS by latches U8 and U9. The microprocessor sequentially addresses each buffer and latch through the AF ADD BUS and address decoder U21. Data is transferred to/from the selected latch/buffer while the AF BUS EN 2 signal is low.

15.1.2 ANALOG INTERFACE

The analog outputs of the Front-Panel Interface are driven by four amplifiers: the scope-vertical pre-amplifier (U3, Q9, Q13, Q14), the DVM buffer amplifier (U5, U6, U4B), the frequency-counter pre-amplifier (Q12, U7) and the scope-horizontal pre-amplifier (U4A). Circuits for input selection (K2-K4, Q2, Q3, Q6), the range attenuator (K5-K8, Q4, Q5, Q7, Q8), and the unity-gain buffer amplifier (Q1) drive the inputs of the first three amplifiers. The input to the scope-horizontal pre-amplifier comes directly from the edge-card connector.

15.2 THEORY OF OPERATION

15.2.1 PROCESSOR-CONTROL INTERFACE

15.2.1.1 AF Bus

Information is carried between the microprocessor and the Front-Panel Interface by the AF Bus. It consists of a 4-bit, tri-state data bus (AF DATA BUS 0-3) and a 4-bit address bus (AF ADD BUS 0-3). When $\overline{\text{AF BUS EN 2}}$ is asserted low, the input/output (I/O) function of the AF DATA BUS lines is determined by the address on the AF ADD BUS lines. Depending on that address, address decoder U21 can select the following I/O devices: 1) data buffers U13, U17, U19, and U20; 2) data latches U8 and U9; and data latches A18U6, A18U7, and A18U8.

A summary of the functions of the AF DATA BUS lines for each state of the AF ADD BUS is given in Table 15-1.

15.2.1.2 LED Control

The AF BUS ADDRESSES 0, 1, and 2 control the output to the display, function, and modulation LEDs on the Front-Panel Display board (A18A1). Latch-selects LS0, LS1, and LS2 are asserted low to latch the data that is present on the AF ADD BUS. These latch-selects and the AF DATA BUS are connected to the Display board (A18A1) via J1 and a ribbon cable assembly.

Table 15-2 shows which LED is selected when the state of the AF DATA BUS is as shown and the appropriate latch-select ($\overline{\text{LS0}}$, $\overline{\text{LS1}}$, or $\overline{\text{LS2}}$) is strobed low.

15.2.1.3 Range-Attenuator Control (ATTN X1, X0.1, X0.01, X0.001)

Location 3 of the AF BUS accesses outputs which control the range attenuator. Table 15-3 shows the allowable states of these four control bits, and the function of those states.

Table 15-1. AF ADD and DATA BUS

$\overline{\text{AF BUS EN 2}}$	AF ADD BUS Lines				INPUT/ OUTPUT	$\overline{\text{LSX}}$ ASSERTED	AF DATA BUS 3	AF DATA BUS 2	AF DATA BUS 1	AF DATA BUS 0	NOTE
	3	2	1	0							
0	0	0	0	0	I	0	DISPLAY 3	DISPLAY 2	DISPLAY 1	DISPLAY 0	*
0	0	0	0	1	I	1	FUNCTION 3	FUNCTION 2	FUNCTION 1	FUNCTION 0	*
0	0	0	1	0	I	2	MODE 3	MODE 2	MODE 1	MODE 0	*
0	0	0	1	1	I	3	ATTEN X 0.001	ATTEN X 0.01	ATTEN X 0.1	ATTEN X 1	
0	0	1	0	0	I	4	Not Used	Not Used	EXT INPUT SELECT	DC SELECT	
0	0	1	0	1	O	5	RF ATTEN 3	RF ATTEN 2	RF ATTEN 1	RF ATTEN 0	
0	0	1	1	0	O	6	RF OVER TEMP	$\overline{\text{WB SIG PRES}}$	ANT SEL	SPARE	
0	0	1	1	1	O	7	$\overline{\text{IF OVERLOAD}}$	$\overline{\text{SIG PRES}}$	OFFSET ON/ OFF	WB/NB	
0	1	0	0	0	O	8	$\overline{\text{CSSG CONT EN}}$	$\overline{\text{CSSG BURST EN}}$	IMAGE HI/LO	MON/GEN	
0	1	0	0	1	O	9	10V/DIV RNG SEL	1V/DIV RNG SEL	0.1V/DIV RNG SEL	0.01V/DIV RNG SEL	
0	1	0	1	0	O	10	SPARE BIT	SWP SEL 2	SWP SEL 1	SWP SEL 0	
0	1	0	1	1	X	N	X	X	X	X	
0	1	1	X	X	X	N	X	X	X	X	
1	X	X	X	X	X	N	X	X	X	X	

*LS0-LS2 are decoded and sent to A18. Decoding of data shown is done on A18.

Table 15-2. Decoding for Display, Function, and Modulation LEDs

AF DATA BUS Lines				Display LED Selected ($\overline{\text{LS0}}$ Strobed Low)	Function LED Selected ($\overline{\text{LS1}}$ Strobed Low)	Modulation LED Selected ($\overline{\text{LS2}}$ Strobed Low)
0	1	2	3			
0	0	0	0	Gen/Mon Mtr	FM	PL/DPL
0	0	0	1	Modulation	CW	PL/DPL INV
0	0	1	0	Spect Analyzer	AM	Tone A
0	0	1	1	Duplex Gen	SSB/DSBSC	Tone B
0	1	0	0	RF Memory	SWP 1-10 MHz	Tone Seq
0	1	0	1	Signaling Seq	SWP 0.01-1 MHz	Tone Remote
0	1	1	0	Freq Counter	Not Allowed	Not Allowed
0	1	1	1	DVM/DIST	Not Allowed	Not Allowed
1	0	0	0	Ext Wattmeter	Not Allowed	Not Allowed
1	0	0	1	IF	Not Allowed	Not Allowed
1	0	1	0	Scope AC	Not Allowed	Not Allowed
1	0	1	1	Scope DC	Not Allowed	Not Allowed
1	1	0	0	Not Allowed	Not Allowed	Not Allowed
1	1	0	1	Not Allowed	Not Allowed	Not Allowed
1	1	1	0	Not Allowed	Not Allowed	Not Allowed
1	1	1	1	Not Allowed	Not Allowed	Not Allowed

Table 15-3. Range-Attenuator Switching

Attenuation	ATTEN Lines				Gain from Selected Input to DVM FROM RNG SW Output	Gain from Selected Input to VERT FROM RNG SW Output (VERNIER CAL POS)	Sensitivity of EXT FREQ. CNTR and $\overline{\text{EXT FREQ. CNTR}}$ Outputs to Selected Input
	X0.001	X0.01	X0.1	X1			
X1	0	0	0	1	1	50	30 MV
X0.1	0	0	1	0	0.1	5	300 MV
X0.01	0	1	0	0	0.01	0.5	3 V
X0.001	1	0	0	0	0.001	0.05	30 V

15.2.1.4 Input-Switching Control

Location 4 of the AF BUS accesses outputs which control selection of the external (P1-1) or internal (P1-24) inputs and ac or dc coupling of the external input. This control is achieved with data-bus bits 0 and 1 as shown in Table 15-4.

Table 15-4. Input Switching

EXT INPUT SELECT	DC SELECT	Input Source	Coupling
1	1	EXT INPUT	dc
1	0	EXT INPUT	ac
0	X	INT SCOPE TO RNG SW	dc

15.2.1.5 RF-Attenuator Encoding

The RF ATTEN 0-130 dB inputs indicate the setting of the RF step attenuator in the RF Input module (A17). When one of these inputs is driven high, the corresponding attenuation has been selected. These fourteen inputs are converted to a 4-bit code (RF ATTEN 0-3) by priority encoders U10 and U12 and OR gates U12. Location 5 of the AF BUS accesses these outputs. Table 15-5 shows the encoding of the RF ATTEN 0-130 dB inputs into the RF ATTEN 0-3 output.

Table 15-5. RF-Attenuator Encoding

RF ATTEN Lines														RF ATTEN Bits			
130 dB	120 dB	110 dB	100 dB	90 dB	80 dB	70 dB	60 dB	50 dB	40 dB	30 dB	20 dB	10 dB	0 dB	3	2	1	0
0	0	0	0	0	0	0	0	0	0	0	0	0	0	0	0	0	0
0	0	0	0	0	0	0	0	0	0	0	0	0	1	0	0	0	0
0	0	0	0	0	0	0	0	0	0	0	0	1	0	0	0	0	1
0	0	0	0	0	0	0	0	0	0	0	1	0	0	0	0	1	0
0	0	0	0	0	0	0	0	0	0	1	0	0	0	0	0	1	1
0	0	0	0	0	0	0	0	0	1	0	0	0	0	0	1	0	0
0	0	0	0	0	0	0	0	1	0	0	0	0	0	0	1	0	1
0	0	0	0	0	0	0	1	0	0	0	0	0	0	0	1	1	0
0	0	0	0	0	0	1	0	0	0	0	0	0	0	0	1	1	1
0	0	0	0	0	1	0	0	0	0	0	0	0	0	1	0	0	0
0	0	0	0	1	0	0	0	0	0	0	0	0	0	1	0	0	1
0	0	0	1	0	0	0	0	0	0	0	0	0	0	1	0	1	0
0	0	1	0	0	0	0	0	0	0	0	0	0	0	1	0	1	1
0	1	0	0	0	0	0	0	0	0	0	0	0	0	1	1	0	0
1	0	0	0	0	0	0	0	0	0	0	0	0	0	1	1	0	1

15.2.1.6 Miscellaneous Inputs

Locations 6-8 of the AF BUS access miscellaneous data inputs. Table 15-1 gives the specific location of each input on the bus. Table 15-6 gives a brief description of each input.

Table 15-6. Functions of Miscellaneous Inputs

Input	Function
RF OVER TEMP	When high, indicates the Wattmeter (A17A1) is overheated.
$\overline{\text{WB SIG PRES}}$	Comes from the Receiver (A8) – during the system's scan-acquisition, indicates the presence of a signal at the monitor input.
ANT SEL	Comes from the Front Panel (A18) – selects the system's I/O port. When the variable RF Level control is pulled out, this signal goes high, selecting the Antenna port. When the control is pushed in, this signal goes low, selecting the RF In/Out port.
$\overline{\text{IF OVERLOAD}}$	Comes from the Receiver – indicates the monitor is being over-driven.
$\overline{\text{SIG PRES}}$	Comes from the Receiver – indicates the presence of a signal on the monitor input which is sufficiently high to open the Receiver squelch.
OFFSET ON/OFF	Indicates the position of the Duplex Gen switch on the RF Input module (A17).
WB/NB	Indicates the position of the bandwidth (BW) switch on the front panel.
$\overline{\text{CSSG CONT EN}}$ and $\overline{\text{CSSG BURST EN}}$	Indicate whether the front panel's Modulation switch is set to Cont or Burst, respectively.
IMAGE HI/LO	Indicates the position of the Image/Duplex switch on the front panel.
MON/GEN	Indicates the position of the Function switch on the front panel.

15.2.1.7 Range-Select Inputs

The 0.01 to 10V/Div RNG SEL inputs indicate which scope vertical-input sensitivity has been selected. When one of these inputs is low, the corresponding sensitivity has been selected. The microprocessor programs the appropriate attenuation in the range attenuator via the ATTN X0.001 to 1 signals. Location 9 on the AF BUS accesses the 0.01 to 10V/Div RNG SEL inputs.

15.2.1.8 Sweep-Select Encoding

The 1 µs to 100 ms/DIV SWP SEL and EXT HORIZ SEL inputs indicate the position of the Oscilloscope Horiz switch on the front panel. When one of these inputs is high, the corresponding switch position has been selected. These inputs are converted to a 3-bit code, SWP SEL 0-2, by priority encoder U18, according to the algorithm in Table 15-7. Location 10 on the AF BUS accesses the SWP SEL 0-2 outputs.

Table 15-7. Sweep-Select Encoding

SWP SEL Lines							SWP SEL Bits		
EXT HORIZ SEL	100 ms/DIV	10 ms/DIV	1 ms/DIV	100 µs/DIV	10 µs/DIV	1 µs/DIV	2	1	0
0	0	0	0	0	0	0	0	0	0
0	0	0	0	0	0	1	0	0	0
0	0	0	0	0	1	0	0	0	1
0	0	0	0	1	0	0	0	1	0
0	0	0	1	0	0	0	0	1	1
0	0	1	0	0	0	0	1	0	0
0	1	0	0	0	0	0	1	0	1
1	0	0	0	0	0	0	1	1	0

15.2.1.9 RF-Scan Encoding

The OPTICAL ENC A and B inputs carry information from the RF Scan optical encoder on the front panel. This encoder is interfaced to the system microprocessor by U22, U23, and Q16 on the Front-Panel Interface. As the RF Scan control is rotated, each change in the OPTICAL ENC A input causes the FIRQ output, which goes to the microprocessor, to pull low for approximately 10 µs. The OPTO CCW output, which goes to a PIA on the Processor board (A14), indicates the direction of the scanning. This output is generated by latching the OPTICAL ENC B input and exclusively ORing it with the OPTICAL ENC A input.

15.2.1.10 Input/Output Characteristics

All digital inputs and outputs are interfaced to 'B' series CMOS logic, which operates from 0V/5V supplies. To facilitate interface with a mechanical switch, some inputs have pull-up or pull-down resistors.

15.2.1.11 Miscellaneous Front-Panel Interconnections

The Front-Panel Interface provides miscellaneous interconnections between the front panel and the rest of the system. These connections come from the front panel through two ribbon cables and connectors, J1 and J2. They are then routed through edge connector P1.

15.2.2 ANALOG INTERFACE

15.2.2.1 Input Switching (K2-K4, Q2, Q3, Q6)

The input to the range attenuator can be selected from either the EXT INPUT or the INT SCOPE TO RNG SW inputs. Ac or dc coupling may be selected for the external input. Input switching is controlled by the DC SELECT and EXT INPUT SELECT signals, as shown in Table 15-4. The generation of these signals is discussed in paragraph 15.2.1.4.

15.2.2.2 Range Attenuator (K5-K8, Q4, Q5, Q7, Q8)

The range attenuator provides four selectable values of attenuation: X1, X0.1, X0.01, and X0.001. Attenuation is controlled by the ATTEN X0.001 to 1 signals, as shown in Table 15-3. Compensation capacitor C11 is adjusted for maximum bandwidth. To adjust C11, see Section 3 on alignment.

15.2.2.3 Unity-Gain Buffer Amplifier

Unity-gain buffer amplifier Q11 buffers the signals under test from the frequency-counter pre-amplifier, the DVM buffer amplifier, and the scope's vertical pre-amplifier inputs. R54 (coarse) and R55 (fine) are adjusted so that there is a voltage gain of one from the EXT INPUT to TP1. To align R54 and R55, see Section 3 on alignment.

15.2.2.4 Scope Vertical Pre-Amplifier (U3, Q9, Q13, Q14)

The scope's vertical pre-amplifier has a nominal gain of 50 when the front panel's vertical-gain potentiometer (which is connected between VERT GAIN and VERT GAIN RETURN) is set to 0 ohms. When the gain potentiometer is set at 5K ohms, the gain of the amplifier is less than or equal to 5. The front panel's 5K ohm vertical-position potentiometer (which is connected between VERT POSITION and ground) varies the dc offset of the amplifier. This amplifier drives the VERT FROM RNG SW output. R19 and R25 adjust the gain and balance, respectively, of the vertical pre-amplifier. To align R19 and R25, see Section 3 on alignment.

Table 15-3 shows, as a function of the range-attenuator setting, the vertical pre-amplifier's gain from the selected input to the VERT FROM RNG SW output.

15.2.2.5 DVM Buffer Amplifier

The DVM buffer amplifier provides switched-bandwidth buffering between the unity-gain amplifier (Q11) and the DVM circuitry on the Scope/DVM Control board(A7). In ac mode, operational amplifier U7 operates as a unity-gain amplifier with a gain flatness of ± 2 percent out to 20 kHz. In dc mode, analog switches U6A and U6C switch C26 and C22, respectively, into the amplifier circuit. In this configuration, the amplifier has a dc gain of 1 and a minimum attenuation of 30 dB at 50 Hz. The amplifier bandwidth is controlled by a signal from latch U9, which has the opposite sense of the DC SELECT signal. U4B inverts the sense of this signal and then translates it from a logic level of 0 to $+5$V to a logic level of -8 to $+8$V. The signal is now compatible with the control inputs of U6A and U6C. R41 is adjusted for a gain of one from TP1 to the DVM FROM RNG SW output. To adjust R41, see Section 3 on alignment.

Table 15-3 shows the gain from the selected input to the DVM FROM RNG SW output as a function of the range-attenuator setting.

15.2.2.6 Frequency-Counter Pre-Amplifier

The frequency-counter pre-amplifier (Q12 and U7) converts the output of unity-gain buffer Q11 to ECL levels. The output is differentially connected through the EXT FREQ CNTR and $\overline{\text{EXT FREQ CNTR}}$ outputs to the Processor Interface board (A11). Table 15-3 shows the sensitivity of this amplifier as a function of the range attenuator.

15.2.2.7 Scope Horizontal Pre-Amplifier

The scope's horizontal pre-amplifier provides a nominal voltage gain of 5 between the HORIZ INPUT and the HORIZ TO SCOPE AMP output.

FRONT-PANEL INTERFACE BOARD (A15)

(RTC-1011A)

Figure 15-1. Block Diagram

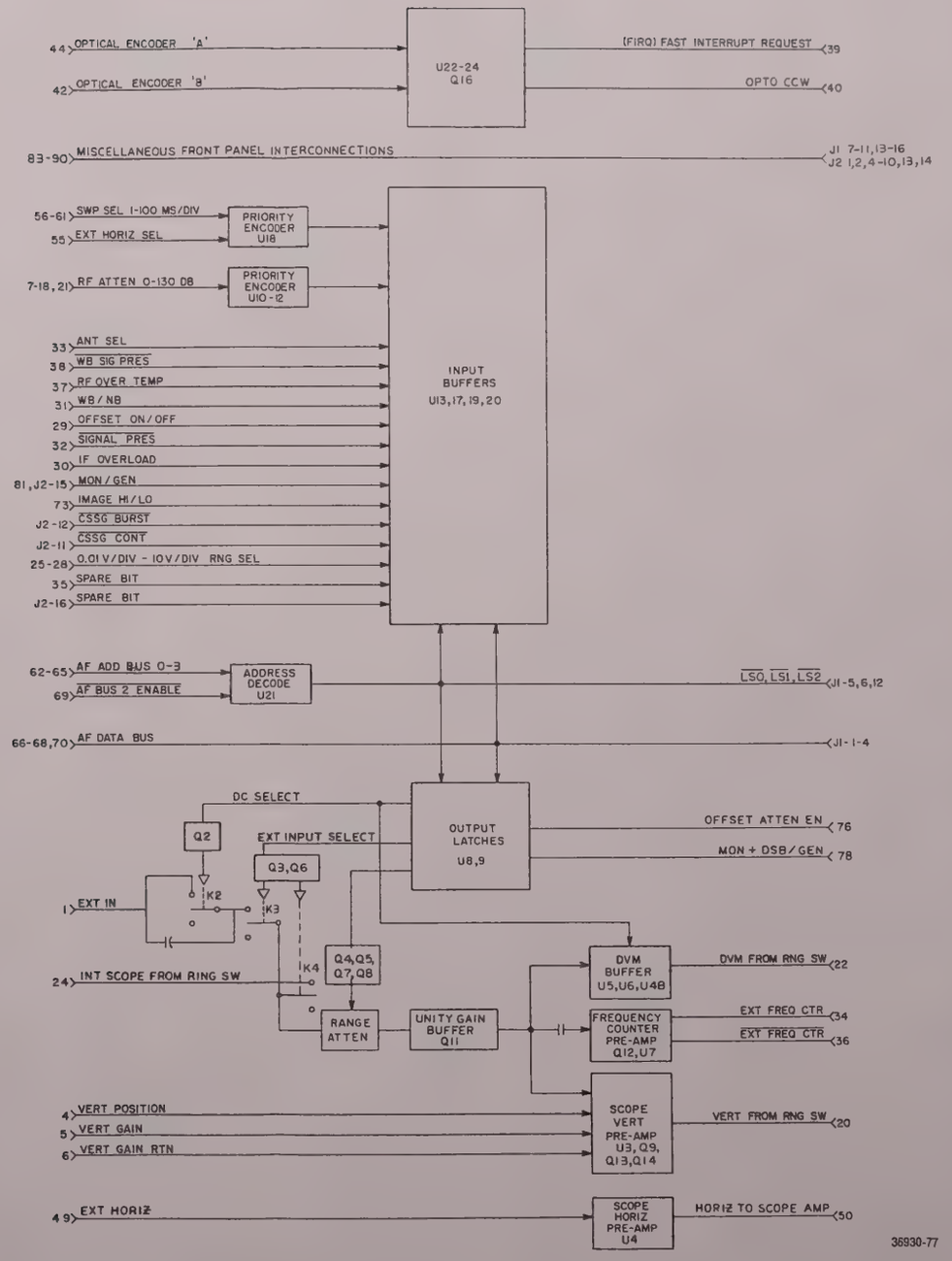

FRONT-PANEL INTERFACE BOARD (A15)

(RTC-1011A)

Figure 15-2a. Schematic (Sheet 1 of 2)

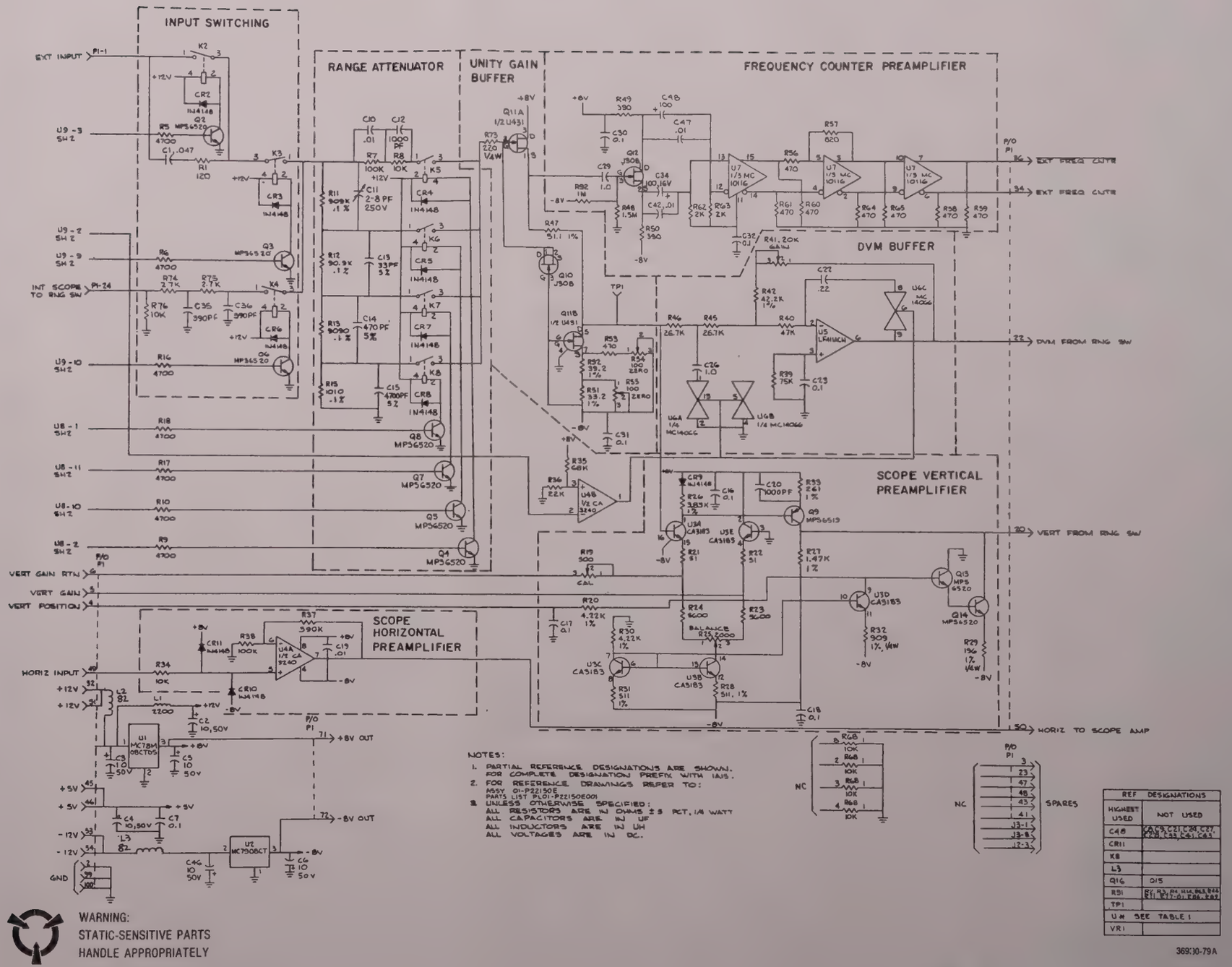

FRONT-PANEL INTERFACE BOARD (A15)

(RTC-1011A)

Figure 15-2b. Schematic (Sheet 2 of 2)

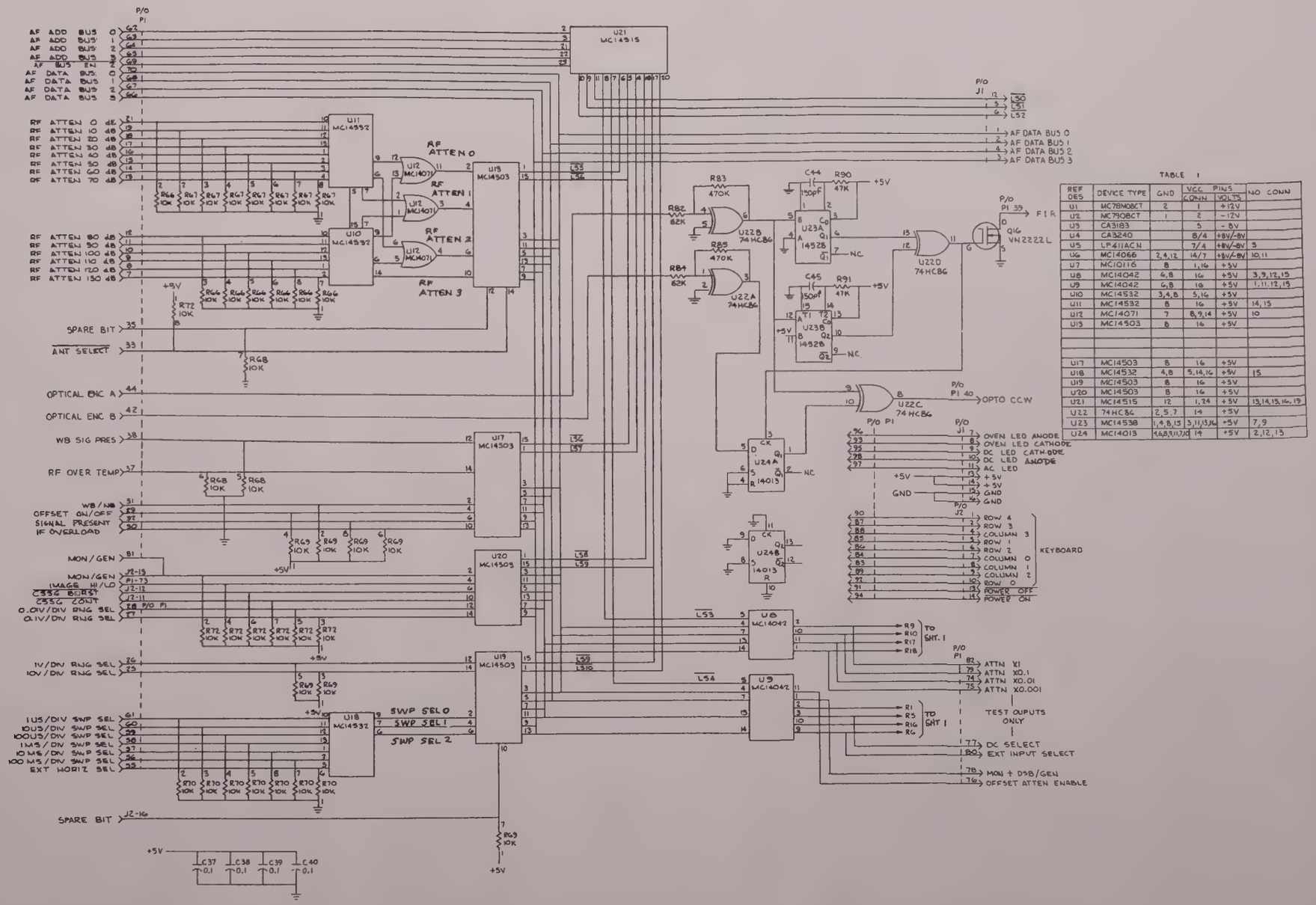

TABLE 1

REF DES	DEVICE TYPE	GND	VCC CONN	VCC VOLTS	NO CONN
U1	MC7812CT	2	1	+12V	
U2	MC7912CT	1	2	-12V	
U3	CA3183		5	-8V	
U4	CA3240		8/4	+8V/-8V	
U5	LF411ACN		7/4	+8V/-8V	5
U6	MC14066	2,4,12	14/7	+8V/-8V	10,11
U7	MC10116	8	1,16	+5V	
U8	MC14042	6,8	16	+5V	3,9,12,15
U9	MC14042	6,8	16	+5V	1,11,12,15
U10	MC14532	3,4,8	5,16	+5V	
U11	MC14532	8	16	+5V	14,15
U12	MC14071	7	8,9,14	+5V	10
U13	MC14503	8	16	+5V	
U17	MC14503	8	16	+5V	
U18	MC14532	4,8	5,14,16	+5V	15
U19	MC14503	8	16	+5V	
U20	MC14503	8	16	+5V	
U21	MC14515	12	1,24	+5V	13,14,15,16,19
U22	74HC86	2,5,7	14	+5V	
U23	MC14538	1,4,8,15	3,11,13,16	+5V	7,9
U24	MC14013	4,6,8,9,11,13	14	+5V	2,12,13

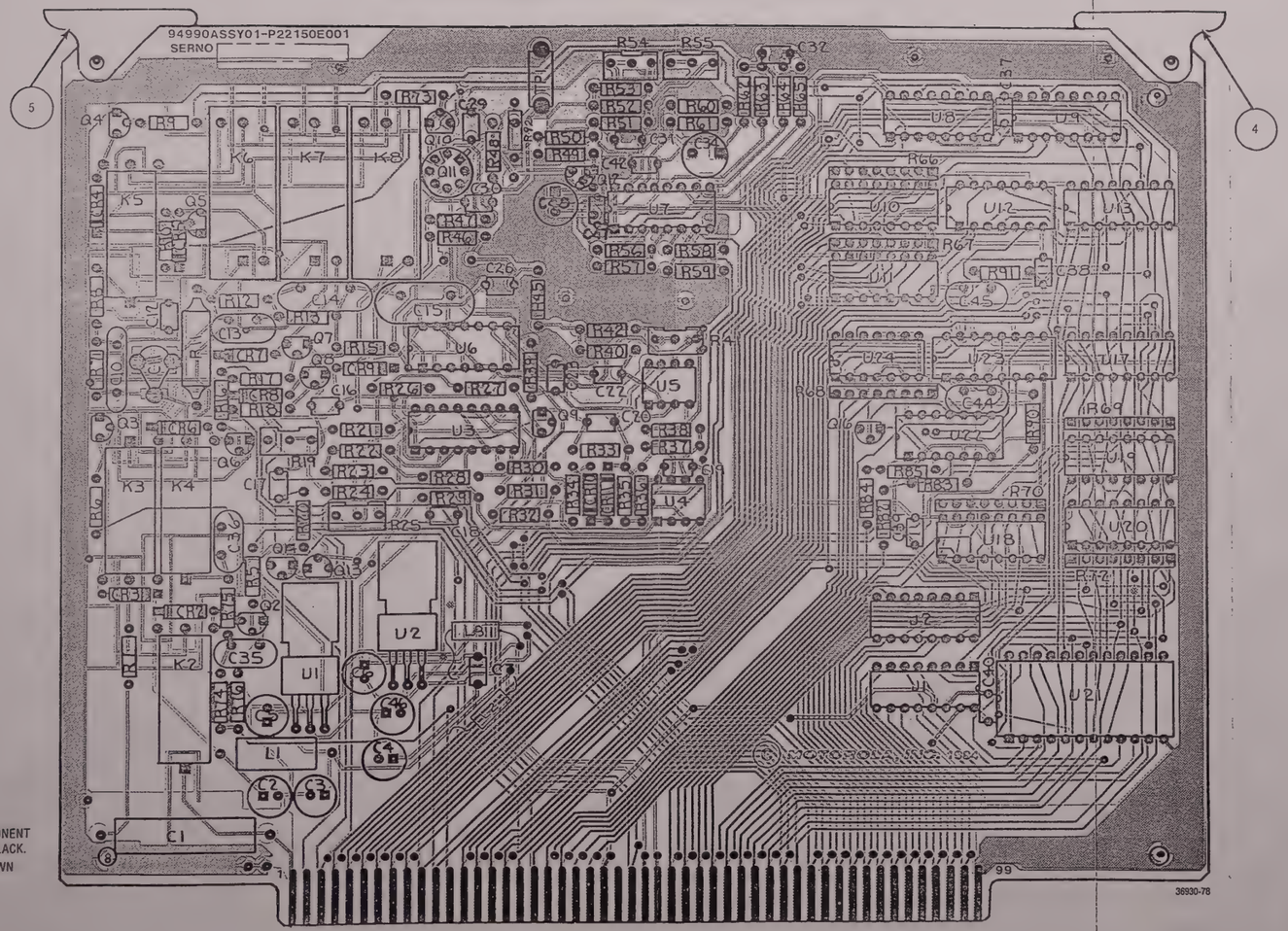

COMPONENTS AND COMPONENT SIDE TRACK SHOWN IN BLACK.
SOLDER-SIDE TRACK SHOWN IN ORANGE

15-11

FRONT-PANEL INTERFACE BOARD (A15)
RTC-1011A

Find No.	Qty. Req.	Part No.	Nomenclature	Part Value
004	1	45-80339B34	CARD EJECTOR	MARKED
005	1	45-80339B28	CARD EJECTOR	
C 001	1	08-80343B09	CAPACITOR	.047UF-5-600
C 002	1	23-80341B15	CAPACITOR	10UF-20-50
C 003	1	23-80341B15	CAPACITOR	10UF-20-50
C 004	1	23-80341B15	CAPACITOR	10UF-20-50
C 005	1	23-80341B15	CAPACITOR	10UF-20-50
C 006	1	23-80341B15	CAPACITOR	10UF-20-50
C 007	1	21-80342B10	CAPACITOR	.1UF-20-50
C 010	1	08-80343B11	CAPACITOR	.01UF-10-400
C 011	1	20-80370A32	CAPACITOR	2-8PF-250V
C 012	1	21-80341B92	CAPACITOR	1000PF-10-100
C 013	1	21-80369A90	CAPACITOR	33PF-5-500
C 014	1	21-80339B27	CAPACITOR	470PF-5-500
C 015	1	21-80369A96	CAPACITOR	4700PF-5-500
C 016	1	21-80342B10	CAPACITOR	.1UF-20-50
C 017	1	21-80342B10	CAPACITOR	.1UF-20-50
C 018	1	21-80342B10	CAPACITOR	.1UF-20-50
C 019	1	21-80342B09	CAPACITOR	.01UF-20-50
C 020	1	21-80341B92	CAPACITOR	1000PF-10-100
C 022	1	21-80342B11	CAPACITOR	.22UF-20-50
C 023	1	21-80342B10	CAPACITOR	.1UF-20-50
C 026	1	21-80342B46	CAPACITOR	.1UF-20-50
C 029	1	21-80342B46	CAPACITOR	.1UF-20-50
C 030	1	21-80342B10	CAPACITOR	.1UF-20-50
C 031	1	21-80342B10	CAPACITOR	.1UF-20-50
C 032	1	21-80342B10	CAPACITOR	.1UF-20-50
C 034	1	23-84665F26	CAPACITOR	100UF-20-16
C 035	1	21-80339B21	CAPACITOR	390PF-5-100
C 036	1	21-80339B21	CAPACITOR	390PF-5-100
C 037	1	21-80342B10	CAPACITOR	.1UF-20-50
C 038	1	21-80342B10	CAPACITOR	.1UF-20-50
C 039	1	21-80342B10	CAPACITOR	.1UF-20-50
C 040	1	21-80342B10	CAPACITOR	.1UF-20-50
C 042	1	21-80342B09	CAPACITOR	.01UF-20-50
C 044	1	21-80369A94	CAPACITOR	150PF-5-500
C 045	1	21-80369A94	CAPACITOR	150PF-5-500
C 046	1	23-80341B15	CAPACITOR	10UF-20-50
C 047	1	21-80342B09	CAPACITOR	.01UF-20-50
C 048	1	23-84665F26	CAPACITOR	100UF-20-16
CR002	1	48-84463K02	DIODE	
CR003	1	48-84463K02	DIODE	
CR004	1	48-84463K02	DIODE	
CR005	1	48-84463K02	DIODE	
CR006	1	48-84463K02	DIODE	
CR007	1	48-84463K02	DIODE	
CR008	1	48-84463K02	DIODE	
CR009	1	48-84463K02	DIODE	
CR010	1	48-84463K02	DIODE	
CR011	1	48-84463K02	DIODE	
J 001	1	09-80331A97	SOCKET,SOLDER DIP	16 PIN
J 002	1	09-80331A97	SOCKET,SOLDER DIP	16 PIN
K 002	1	80-80346A01	RELAY,REED	1A-500V
K 003	1	80-80346A01	RELAY,REED	1A-500V
K 004	1	80-80346A01	RELAY,REED	1A-500V
K 005	1	80-80346A01	RELAY,REED	1A-500V
K 006	1	80-84157B01	REED RELAY	1A
K 007	1	80-84157B01	REED RELAY	1A
K 008	1	80-84157B01	REED RELAY	1A
L 001	1	24-80369A43	COIL	2200UH
L 002	1	24-80340B59	COIL	82UH-5
L 003	1	24-80340B59	COIL	82UH-5
Q 002	1	48-80340B86	TRANSISTOR	MPS6520
Q 003	1	48-80340B86	TRANSISTOR	MPS6520
Q 004	1	48-80340B86	TRANSISTOR	MPS6520
Q 005	1	48-80340B86	TRANSISTOR	MPS6520
Q 006	1	48-80340B86	TRANSISTOR	MPS6520
Q 007	1	48-80340B86	TRANSISTOR	MPS6520
Q 008	1	48-80340B86	TRANSISTOR	MPS6520
Q 009	1	48-80340B85	TRANSISTOR	MPS6519
Q 010	1	48-80345A41	TRANSISTOR	N-CHANNEL JFET
Q 011	1	48-80368A90	TRANSISTOR	DUAL N-CHANNEL JFET
Q 012	1	48-80345A41	TRANSISTOR	N-CHANNEL JFET
Q 013	1	48-80340B85	TRANSISTOR	MPS6520
Q 014	1	48-80340B86	TRANSISTOR	MPS6520
Q 016	1	48-80341B23	TRANSISTOR,MOSFET,	N-CHANNEL
R 001	1	06-11009C27	RESISTOR	120-5-1/4
R 005	1	06-11009C65	RESISTOR	4.7K-5-1/4
R 006	1	06-11009C65	RESISTOR	4.7K-5-1/4
R 007	1	06-11009C97	RESISTOR	100K-5-1/4
R 008	1	06-11009C73	RESISTOR	10K-5-1/4
R 009	1	06-11009C65	RESISTOR	4.7K-5-1/4

FRONT-PANEL INTERFACE BOARD (A15)

(RTC-1011A)

Figure 15-3. Printed Wiring Board Assembly and Parts List

FRONT-PANEL INTERFACE BOARD (A15) (Cont)

RTC-1011A

Find No.	Qty. Req.	Part No.	Nomenclature	Part Value
R 010	1	06-11009C65	RESISTOR	4.7K-5-1/4
R 011	1	06-80396A73	RESISTOR	909K-.1-1/4
R 012	1	06-80396A71	RESISTOR	90.9K-.1-1/4
R 013	1	06-80396A70	RESISTOR	9090-.1-1/4
R 015	1	06-80396A60	RESISTOR	1010-.1-1/4
R 016	1	06-11009C65	RESISTOR	4.7K-5-1/4
R 017	1	06-11009C65	RESISTOR	4.7K-5-1/4
R 018	1	06-11009C65	RESISTOR	4.7K-5-1/4
R 019	1	18-83452F07	RESISTOR,VARIABLE	500
R 020	1	06-10621C55	RESISTOR	4.22K-1-1/4
R 021	1	06-11009C18	RESISTOR	51-5-1/4
R 022	1	06-11009C18	RESISTOR	51-5-1/4
R 023	1	06-11009C67	RESISTOR	5.6K-5-1/4
R 024	1	06-11009C67	RESISTOR	5.6K-5-1/4
R 025	1	18-83452F01	RESISTOR,VARIABLE	2K
R 026	1	06-10621C51	RESISTOR	3.83K-1-1/4
R 027	1	06-10621C11	RESISTOR	1.47K-1-1/4
R 028	1	06-10621B66	RESISTOR	511-1-1/4
R 029	1	06-10621B26	RESISTOR	196-1-1/4
R 030	1	06-10621C55	RESISTOR	4.22K-1-1/4
R 031	1	06-10621B66	RESISTOR	511-1-1/4
R 032	1	06-10621B90	RESISTOR	909-1-1/4
R 033	1	06-10621B38	RESISTOR	261-1-1/4
R 034	1	06-11009C73	RESISTOR	10K-5-1/4
R 035	1	06-11009C93	RESISTOR	68K-5-1/4
R 036	1	06-11009C81	RESISTOR	22K-5-1/4
R 037	1	06-11009D12	RESISTOR	390K-5-1/4
R 038	1	06-11009C97	RESISTOR	100K-5-1/4
R 039	1	06-11009C94	RESISTOR	75K-5-1/4
R 040	1	06-11009C89	RESISTOR	47K-5-1/4
R 041	1	18-83452F15	RESISTOR,VARIABLE	20K
R 042	1	06-10621D52	RESISTOR	42.2K-1-1/4
R 045	1	06-10621D33	RESISTOR	26.7K-1-1/4
R 046	1	06-10621D33	RESISTOR	26.7K-1-1/4
R 047	1	06-10621A69	RESISTOR	51.1-1-1/4
R 048	1	06-10621F03	RESISTOR	1.5M-5-1/4
R 049	1	06-11009C39	RESISTOR	390-5-1/4
R 050	1	06-11009C39	RESISTOR	390-5-1/4
R 051	1	06-10621D42	RESISTOR	33.2-1-1/4
R 052	1	06-10621A58	RESISTOR	39.2-1-1/4
R 053	1	06-11009C41	RESISTOR	470-5-1/4
R 054	1	18-83452F03	RESISTOR,VARIABLE	100
R 055	1	18-83452F03	RESISTOR,VARIABLE	100
R 056	1	06-11009C41	RESISTOR	470-5-1/4
R 057	1	06-11009C47	RESISTOR	820-5-1/4
R 058	1	06-11009C41	RESISTOR	470-5-1/4
R 059	1	06-11009C41	RESISTOR	470-5-1/4
R 060	1	06-11009C41	RESISTOR	470-5-1/4
R 061	1	06-11009C41	RESISTOR	470-5-1/4
R 062	1	06-11009C56	RESISTOR	2K-5-1/4
R 063	1	06-11009C56	RESISTOR	2K-5-1/4
R 064	1	06-11009C41	RESISTOR	470-5-1/4
R 065	1	06-11009C41	RESISTOR	470-5-1/4
R 066	1	06-80340B10	RESISTOR	10K
R 067	1	06-80340B10	RESISTOR	10K
R 068	1	06-80340B10	RESISTOR	10K
R 069	1	06-80340B10	RESISTOR	10K
R 070	1	06-80340B10	RESISTOR	10K
R 072	1	06-80340B10	RESISTOR	10K
R 073	1	06-11009C33	RESISTOR	220-5-1/4
R 074	1	06-11009C59	RESISTOR	2.7K-5-1/4
R 075	1	06-11009C59	RESISTOR	2.7K-5-1/4
R 076	1	06-11009C73	RESISTOR	10K-5-1/4
R 082	1	06-11009C92	RESISTOR	62K-5-1/4
R 083	1	06-11009D14	RESISTOR	470K-5-1/4
R 084	1	06-11009C92	RESISTOR	62K-5-1/4
R 085	1	06-11009D14	RESISTOR	470K-5-1/4
R 090	1	06-11009C89	RESISTOR	47K-5-1/4
R 091	1	06-11009C89	RESISTOR	47K-5-1/4
R 092	1	06-11009D22	RESISTOR	1M-5-1/4
TP001	1	09-80331A88	JACK	WHITE
U 001	1	51-05292H02	INTEGRATED CIRCUIT	
U 002	1	51-80345A07	INTEGRATED CIRCUIT	MC7908CT SCREENED
U 003	1	51-80343B25	INTEGRATED CIRCUIT	CA3183E SCREENED
U 004	1	51-80345A04	INTEGRATED CIRCUIT	CA3240E SCREENED
U 005	1	51-80339B98	INTEGRATED CIRCUIT	
U 006	1	51-82884L71	INTEGRATED CIRCUIT	
U 007	1	51-80323A60	INTEGRATED CIRCUIT	
U 008	1	51-82884L15	INTEGRATED CIRCUIT	
U 009	1	51-82884L15	INTEGRATED CIRCUIT	
U 010	1	51-80074C03	INTEGRATED CIRCUIT	
U 011	1	51-80074C03	INTEGRATED CIRCUIT	
U 012	1	51-82884L52	INTEGRATED CIRCUIT	
U 013	1	51-82884L74	INTEGRATED CIRCUIT	
U 017	1	51-82884L74	INTEGRATED CIRCUIT	
U 018	1	51-80074C03	INTEGRATED CIRCUIT	
U 019	1	51-82884L74	INTEGRATED CIRCUIT	
U 020	1	51-82884L74	INTEGRATED CIRCUIT	
U 021	1	51-80340B18	INTEGRATED CIRCUIT	
U 022	1	51-80340B81	INTEGRATED CIRCUIT	
U 023	1	51-82884L28	INTEGRATED CIRCUIT	
U 024	1	51-05596E15	INTEGRATED CIRCUIT	

SECTION 16.
FREQUENCY-STANDARD INTERFACE BOARD (A16)

16.1 DESCRIPTION

The Frequency-Standard Interface board provides the 10-MHz timebase for the System Analyzer and the interface for an external 10-MHz input. A standard temperature-compensated crystal oscillator (TCXO) provides stability of ± 1 PPM. An optional oven-compensated crystal oscillator (OCXO) provides stability of ± 0.05 PPM over temperature variation.

A block diagram of the 10-MHz Frequency-Standard Interface board is shown in Figure 16-1, a schematic in Figure 16-2, the printed wiring board assembly and the parts list in Figure 16-3, and the assembly and parts list in Figure 16-4.

16.2 THEORY OF OPERATION

16.2.1 INTERNAL SOURCE

Oscillator A16A2 generates a 10-MHz signal that is split to two amplifiers. One amplifier (Q3) provides the internal timebase; the other amplifier (Q2) provides the external timebase. The two identical amplifiers provide a peak-to-peak signal of 1 to 2V (as adjusted by R18) into a 50-ohm load.

A voltage regulator (U1 and Q1) on the board supplies the voltage to the oscillator and monitors the supply current. For the ovenized option, at power on, the oven draws high current at approximately 1A. As the oven warms up, the current decreases, reaching some low value when the operating temperature is reached. A current detector turns the oven-ready indicator on when the current has decreased to the stabilized value of approximately 325 mA.

16.2.2 EXTERNAL SOURCE

An external 10-MHz timebase can be used by switching S1 (accessible from the bottom of the Analyzer) to the external position. The external source is amplified by Q3, which has an input impedance of 10K ohm. The external source signal must be between 175 mVrms and 2.0 Vrms into 10K ohm.

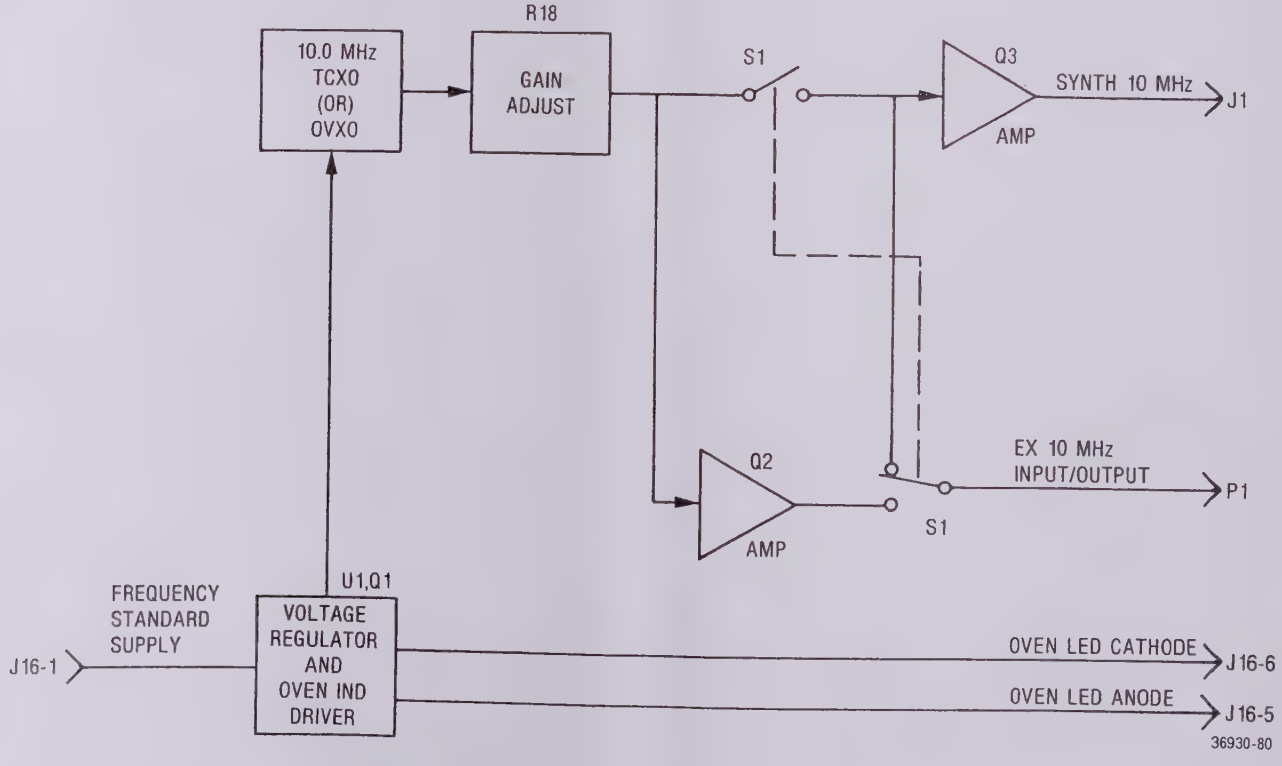

Figure 16-1. Frequency-Standard Interface Board (A16) — Block Diagram

Figure 16-2. Schematic

NOTES:

1. PARTIAL REFERENCE DESIGNATIONS ARE SHOWN. FOR COMPLETE DESIGNATIONS PREFIX WITH 1A16A1.
2. FOR REFERENCE DRAWINGS REFER TO:
   A16 01-P22160E TOP ASSEMBLY
   A16A1 01-P22168E PWB ASSEMBLY
   A16A2 OCX058-P03355N
   A16A3 TCX058-P00354N
3. UNLESS OTHERWISE SPECIFIED:
   ALL RESISTORS ARE IN OHMS ± 5 PCT, 1/4 WATT.
   ALL CAPACITORS ARE IN UF.
   ALL INDUCTORS ARE IN UH.
   ALL VOLTAGES ARE IN DC.

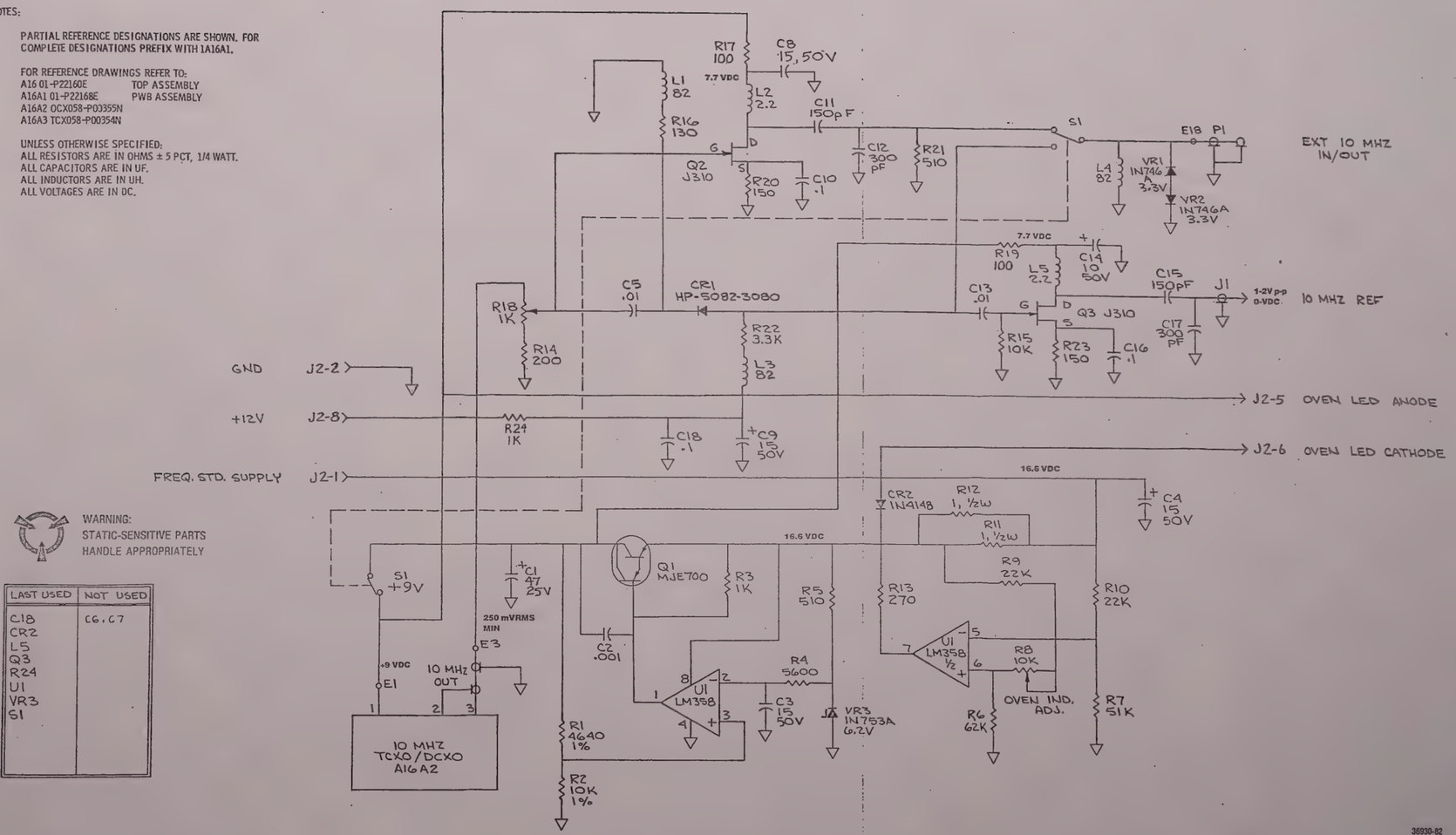

WARNING:
STATIC-SENSITIVE PARTS
HANDLE APPROPRIATELY

LAST USED	NOT USED
C18	C6, C7
CR2	
L5	
Q3	
R24	
U1	
VR3	
S1	

36930-82

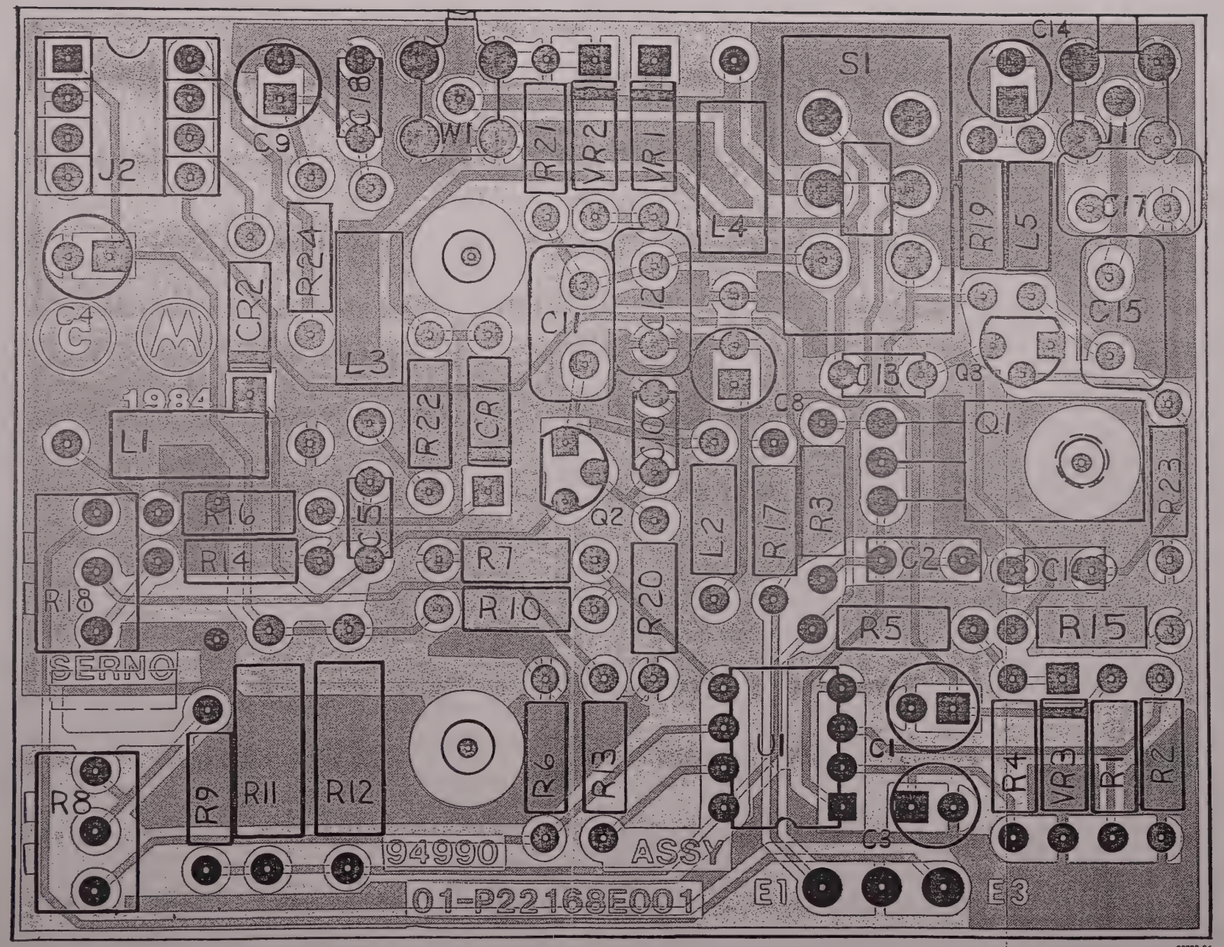

36930-81

COMPONENTS AND COMPONENT SIDE TRACK SHOWN IN BLACK.
SOLDER-SIDE TRACK SHOWN IN ORANGE

FREQUENCY-STANDARD INTERFACE BOARD (A16)
RTL-1020A

Find No.	Qty. Req.	Part No.	Nomenclature	Part Value
C 001	1	23-80341B18	CAPACITOR	47UF-20-25
C 002	1	21-80341B93	CAPACITOR	1000PF-20-100
C 003	1	23-80341B27	CAPACITOR	15UF-20-50
C 004	1	23-80341B27	CAPACITOR	15UF-20-50
C 005	1	21-80342B09	CAPACITOR	.01UF-20-50
C 008	1	23-80341B27	CAPACITOR	15UF-20-50
C 009	1	23-80341B27	CAPACITOR	15UF-20-50
C 010	1	21-80342B10	CAPACITOR	.1UF-20-50
C 011	1	21-80369A94	CAPACITOR	150PF-5-500
C 012	1	21-80339B23	CAPACITOR	300PF-5-300
C 013	1	21-80342B09	CAPACITOR	.01UF-20-50
C 014	1	23-80341B27	CAPACITOR	15UF-20-50
C 015	1	21-80369A94	CAPACITOR	150PF-5-500
C 016	1	21-80342B10	CAPACITOR	.1UF-20-50
C 017	1	21-80339B23	CAPACITOR	300PF-5-300
C 018	1	21-80342B10	CAPACITOR	.1UF-20-50
CR001	1	48-80339B87	DIODE	
CR002	1	48-84463K02	DIODE	
J 001	1	09-80344B23	CONNECTOR	
J 002	1	09-80331A95	SOCKET,SOLDER DIP	8 PIN
L 001	1	24-80340B59	COIL	82UH
L 002	1	24-80369A32	COIL	2.2UH
L 003	1	24-80340B59	COIL	82UH
L 004	1	24-80340B59	COIL	82UH
L 005	1	24-80369A32	COIL	2.2UH
Q 001	1	48-80340B31	TRANSISTOR	
Q 002	1	48-80869B78	TRANSISTOR	N CHANNEL JFET
Q 003	1	48-80869B78	TRANSISTOR	N CHANNEL JFET
R 001	1	06-10621C59	RESISTOR	4.64K-1-1/4
R 002	1	06-10621C91	RESISTOR	10K-1-1/4
R 003	1	06-11009C49	RESISTOR	1K-5-1/4
R 004	1	06-11009C67	RESISTOR	5.6K-5-1/4
R 005	1	06-11009C42	RESISTOR	510-5-1/4
R 006	1	06-11009C92	RESISTOR	62K-5-1/4
R 007	1	06-11009C90	RESISTOR	51K-5-1/4
R 008	1	18-83452F13	RESISTOR,VARIABLE	10K
R 009	1	06-11009C81	RESISTOR	22K-5-1/4
R 010	1	06-11009C81	RESISTOR	22K-5-1/4
R 011	1	06-80037G01	RESISTOR	1-5-1/2
R 012	1	06-80037G01	RESISTOR	1-5-1/2
R 013	1	06-11009C35	RESISTOR	270-5-1/4
R 014	1	06-11009C32	RESISTOR	200-5-1/4
R 015	1	06-11009C73	RESISTOR	10K-5-1/4
R 016	1	06-11009C28	RESISTOR	130-5-1/4
R 017	1	06-11009C25	RESISTOR	100-5-1/4
R 018	1	18-83452F09	RESISTOR,VARIABLE	1K
R 019	1	06-11009C25	RESISTOR	100-5-1/4
R 020	1	06-11009C29	RESISTOR	150-5-1/4
R 021	1	06-11009C42	RESISTOR	510-5-1/4
R 022	1	06-11009C61	RESISTOR	3.3K-5-1/4
R 023	1	06-11009C29	RESISTOR	150-5-1/4
R 024	1	06-11009C49	RESISTOR	1K-5-1/4
S 001	1	40-80340B12	SWITCH,DPDT	
U 001	1	51-82848M17	INTEGRATED CIRCUIT	
VR001	1	48-83461E03	DIODE,ZENER	3.3V-5-.5
VR002	1	48-83461E03	DIODE,ZENER	3.3V-5-.5
VR003	1	48-83461E36	DIODE,ZENER	6.2V-5-.5
W 001	1	30-80343B94	CABLE ASSY,A16 BACK PANEL	

FREQUENCY – STANDARD INTERFACE BOARD (A16)

(RTL-1020A)

Figure 16-3. Printed Wiring Board Assembly and Parts List

FREQUENCY – STANDARD INTERFACE BOARD (A16)

(RTL-1020A)

Figure 16-4. Assembly and Parts List

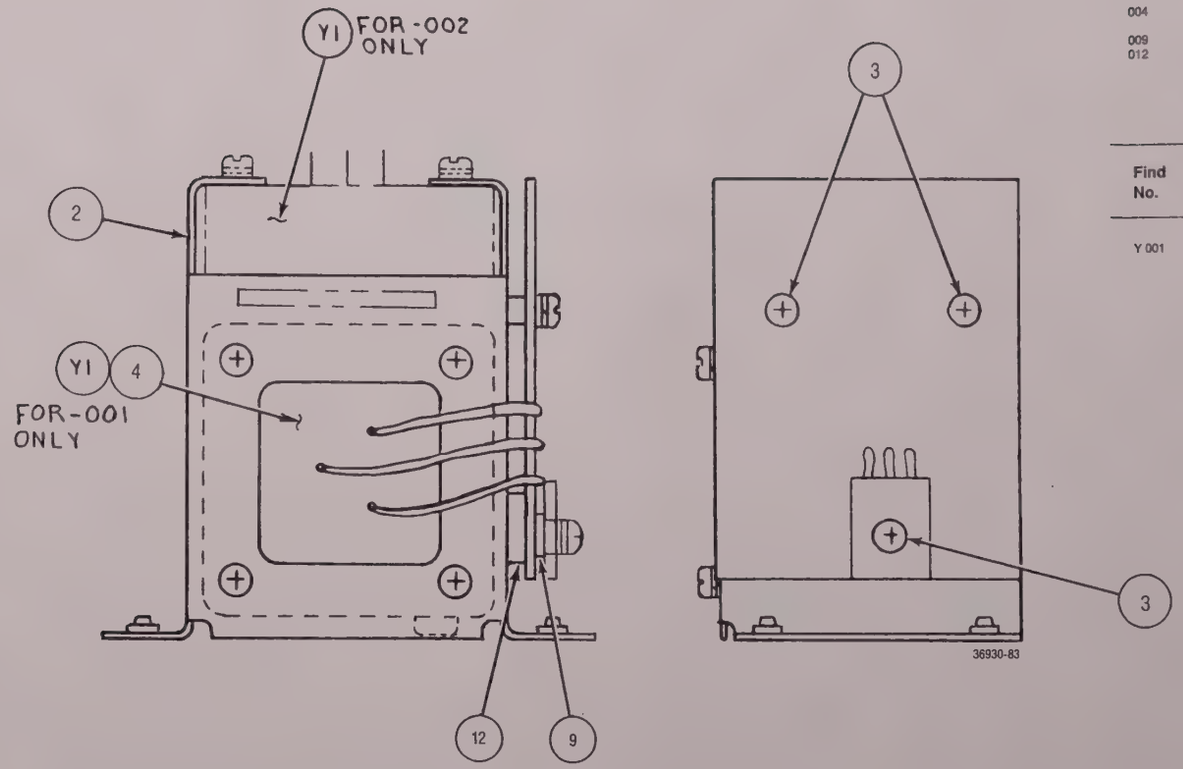

FREQUENCY-STANDARD INTERFACE BOARD (A16)
RTL-1020A

Find No.	Qty. Req.	Part No.	Nomenclature	Part Value
Y 001	1	48-80343B34	TCXO 10 MHZ	
002	1	07-80370A91	BRACKET, OSCILLATOR	
003	3	03-138148	SCREW, PH W/CAPT LOCK WASHER	4-40X.375
004	4	03-129841	SCREW, PH W/CAPT LOCK WASHER	4-40X.250
009	1	14-15140A08	INSULATOR	
012	1	03-80375B09	WASHER, NYLON SHOULDER	

FREQUENCY-STANDARD INTERFACE BOARD (A16)
RTL-1022A

Find No.	Qty. Req.	Part No.	Nomenclature	Part Value
Y 001	1	48-80343B33	OVEN CONTR XTAL OSC 10MHZ	

FREQUENCY – STANDARD INTERFACE BOARD (A16)

(RTL-1020A)

Figure 16-4. Assembly and Parts List

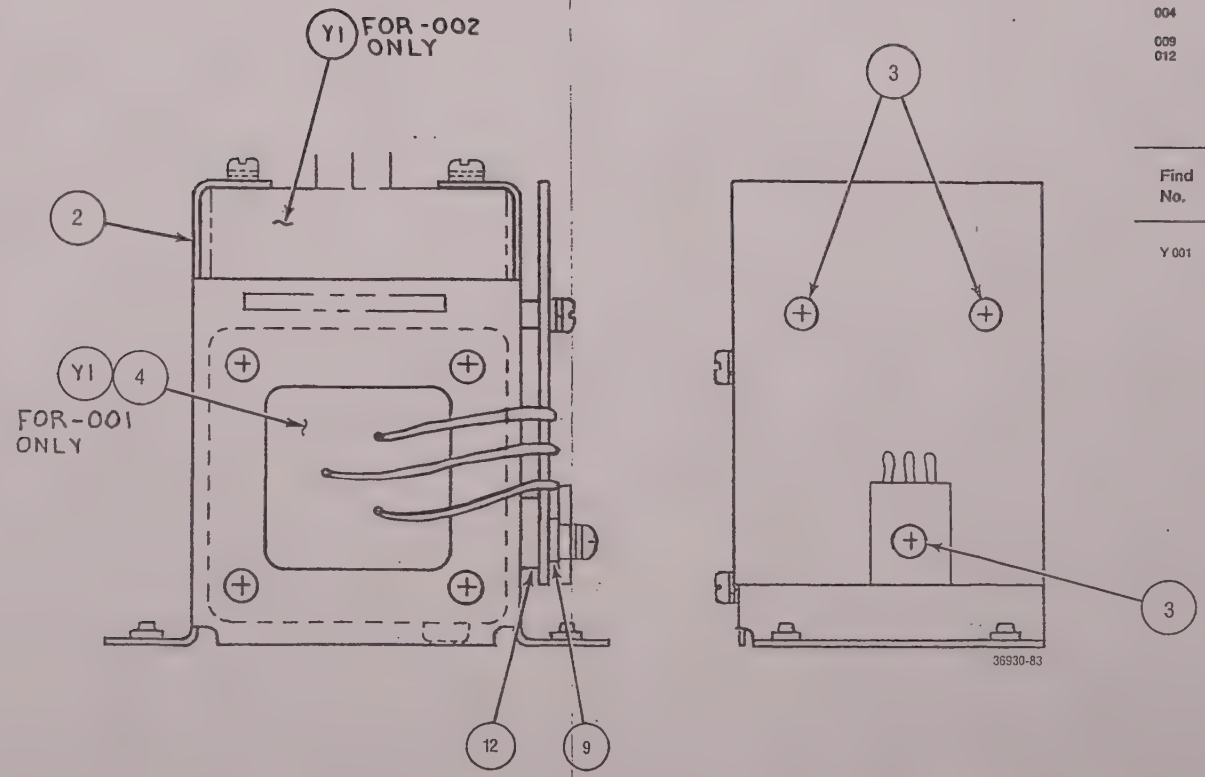

FREQUENCY-STANDARD INTERFACE BOARD (A16)
RTL-1020A

Find No.	Qty. Req.	Part No.	Nomenclature	Part Value
Y 001	1	48-80343B34	TCXO 10 MHZ	
002	1	07-80370A91	BRACKET, OSCILLATOR	
003	3	03-138148	SCREW, PH W/CAPT LOCK WASHER	4-40X.375
004	4	03-129841	SCREW, PH W/CAPT LOCK WASHER	4-40X.250
009	1	14-15140A08	INSULATOR	
012	1	03-80375B09	WASHER, NYLON SHOULDER	

FREQUENCY-STANDARD INTERFACE BOARD (A16)
RTL-1022A

Find No.	Qty. Req.	Part No.	Nomenclature	Part Value
Y 001	1	48-80343B33	OVEN CONTR XTAL OSC 10MHZ	

17.1 DESCRIPTION

The RF Input module comprises four sections:

1) the Wattmeter board (A17A1),
2) the Wideband Amplifier board (A17A2),
3) the Duplex Generator board (A17A3), and
4) the mechanical assembly.

The chassis uses feed-through filters and capacitors to interconnect the three printed circuit boards. The mechanical assembly includes a 0 to 130-dB rotary step attenuator with associated co-axial cables, Antenna, RF In/Out and Duplex Generator ports, and the Duplex Generator On/Off switch.

Electrically, the RF Input module provides five primary RF functions:

1) High-level generate (GENERATE ANTENNA PORT) provides an RF-output signal (AM,FM, or CW; 10 kHz to 1 GHz) adjustable over a range of +13 dBm to −135 dBm;
2) Low-level generate (GENERATOR RF IN/OUT PORT) provides an RF-output signal (as above, for GENERATE ANTENNA PORT), adjustable over a range of −17 dBm to −165 dBm;
3) High-level power monitor (MONITOR RF IN/OUT PORT) provides a means of measuring RF power (1 MHz to 1 GHz; 1 to 125W at ±10 percent accuracy);
4) Sensitive monitor (MONITOR ANTENNA PORT) provides off-the-air reception;
5) Duplex Generator (DUPLEX GEN) provides an RF-output signal, offset in frequency (0 to 10 MHz or fixed 45 MHz) from the received signal.

A wirelist of the RF Input module is shown at the end of the section in Table 17-2, a block diagram in Figure 17-1, and an interconnect diagram in Figure 17-2. Following that, Figure 17-3 coordinates a parts list with the assembly of the RF Input module and with the printed wiring board assembly of the RF Input Flex Standard.

17.2 THEORY OF OPERATION

17.2.1 WATTMETER BOARD (A17A1)

17.2.1.1 General

RF power to and from the System Analyzer passes through the Wattmeter board to one of two ports, Antenna or RF In/Out. In the sensitive monitor mode (less than 100 milliwatts) or in high-level generate mode, the signal is either transmitted or received through the Antenna port. In the high-level RF-input mode, power enters the module through the RF In/Out port. This port is −30 dB below the Antenna port. This board also contains the circuitry for the wattmeter.

A block diagram of the Wattmeter board is shown at the end of the section in Figure 17-4, a schematic in Figure 17-5 and the printed wiring board assembly and parts list in Figure 17-6.

17.2.1.2 Wattmeter

In the monitor-RF-power mode, the signal applied to the RF In/Out port (J1) is first attenuated by a 14-dB, 125W attenuator (AT2). This reduced power level is applied to 50-ohm load AT3. Diode CR1 detects the peak of the voltage produced across the load, and the resulting dc level is applied to a three-stage, instrumentation-style amplifier (U1A, U1B, and U1C).

Thermistor RT2 compensates for changes in the internal temperature of the compartment. Diode CR3 and operational amplifier U1A provide temperature compensation for diode CR1. U1B amplifies the detected signal, and then U1C differentially sums U1B's output with the output of the reference amplifier, U1A. The signal at the output of U1C is connected to the Scope/DVM Control board (A7), where it is routed to the DVM. Because of diode detector CR1, this output is directly proportional to the square root of the power applied (Power in watts = $1.25*V^2$). Potentiometer R20 provides offset adjustment, while R7 provides gain adjustment. For 125W of input power, 50-ohm load AT3 dissipates only 5W, with the balance absorbed by the 14-dB, 125W attenuator, AT2.

17.2.1.3 Over-Temperature Protection

The 14-dB, 125W attenuator (AT2) can dissipate 125 watts for approximately 1.5 minutes, at which time the temperature of the device exceeds the temperature rating of 100°C. Thermistor RT1, recessed into the flange that AT2 is soldered to, decreases in resistance to 10K ohm, causing the output of comparator U2A to go high. This signal causes the processor to activate the System Analyzer's audible alarm and to flash a warning signal on the CRT until the applied RF power is removed and AT2 has had ample time to cool off.

17.2.1.4 Port Selection

The Antenna and RF In/Out port signal is routed to the Wideband Amplifier board (A17A2) by relay K1. The Antenna port is selected by turning on transistor Q1. This path starts at the connector, passes through fuse F1 and relay K1, connecting to the Wideband Amplifier via the rotary step attenuator, AT1. Following loads AT2 and AT3, the RF In/Out port is similarly connected to the Wideband Amplifier via rotary step attenuator AT1. Both the Antenna and RF In/Out port can receive and transmit signals from the Wideband Amplifier.

17.2.2 WIDEBAND AMPLIFIER BOARD (A17A2)

17.2.2.1 General

The Wideband Amplifier board performs three functions: 1) amplification and leveling of the RF Synthesizer's output; 2) RF-switching, which allows the RF Synthesizer's output to be used as the system's RF-generator output or as the local oscillator (L.O.) for the system's monitor function; and 3) frequency-translation, converting the RF input to 10.7 MHz when the system is in monitor mode.

A block diagram of the Wideband Amplifier board is shown at the end of the section in Figure 17-7, a schematic in Figure 17-8, and a printed wiring board assembly and parts list in Figure 17-9.

17.2.2.2 Generate Mode

When the system's FUNCTION control is set to Generate FM, Generate CW, Generate AM, or SWP, or when the DISPLAY control is set to Spect Analyzer, the MON + DSB/GEN input is low, putting the Wideband Amplifier in generate mode. In this mode, the Wideband Amplifier's output is directed through relay K1 and out the ATTENUATOR OUT/IN port. The RF-leveling loop allows control of the level of the RF output. Using the variable RF Level control on the front panel, the operator can vary the level at the Antenna port between −3 dBm and +13 dBm.

17.2.2.2.1 Voltage-Controlled Attenuator (VCA)

The RF Synthesizer's (A9) output drive to amplifier U4 is controlled by the VCA (Q2, CR1, CR2, CR3). As the voltage on the base of Q2 is varied, the currents through PIN diodes CR1, CR2, and CR3 are changed, thus varying the attenuation. Minimum attenuation occurs when the voltage on the base of Q2 is at its maximum (approximately 11 volts). Over the full range of dc control voltages, the VCA range is greater than 50 dB.

17.2.2.2.2 Wideband Amplifiers

The VCA is followed by three stages of amplification at U4, U5, and Q7. This cascade has a nominal gain of about 35 dB and can linearly deliver +16 dBm to a 50-ohm load. U4 and U5 are biased with constant current sources Q4 and Q5, respectively. Q7 is biased in a slightly different manner by Q6. Q6 samples the collector current of Q7 and adjusts the base bias accordingly, to achieve a collector current of 57 mA.

17.2.2.2.3 Detector and Detector Amplifier

The output voltage of the Wideband Amplifier is sampled by detector CR10. Accuracy at low output levels is improved by slightly forward-biasing CR10 with resistors R29-R31 and R33. Operational amplifier U7 amplifies the detector output and drives the CARRIER + MOD LVL output and one input of the summing amplifier. The CARRIER + MOD LVL output is used to measure the output level and percent AM of the signal at the generator output. Gain potentiometer R34 and offset potentiometer R38 are adjusted so that the CARRIER + MOD LVL is 8 times the rms voltage at the output of the front panel's Antenna port.

17.2.2.2.4 Summing Amplifier and ALC-Reference Selection

As mentioned in the previous paragraph, one input of the summing amplifier, U8, is driven by the detector amplifier. The other input is driven by the ALC-reference selector, U9. The summing amplifier compares the detector amplifier's output with the selected ALC reference and then adjusts the VCA's drive to correspond to the desired output level indicated by the ALC-reference voltage. In generate mode, the AM MOD + DC REF input is selected as the ALC reference. When AM is not the selected function, this signal is a dc voltage, controlled by the variable RF Level control on the front panel. The range of this voltage is sufficient to allow an output-power range of −3 dBm to +13 dBm at the front panel's Antenna port. When AM is the selected function, the AM MOD + DC REF input consists of ac and dc components. The ratio of the ac component to the dc component determines the percent AM at the generator output. This ratio and the type of modulation signal are controlled by the front panel's MODULATION controls.

17.2.2.2.5 HI/LO Band Switching

To operate over the full band of 10 kHz to 1 GHz, the Wideband Amplifier is operated in either HI-band mode or LO-band mode. The mode is controlled by the WB AMP HI/LO input. In HI-band mode, the VCA

on the Wideband Amplifier controls the level (1 MHz to 1 GHz), and diodes CR6 and CR7 are switched into amplifiers U4 and U5, respectively. These diodes, when switched on, reduce the low-frequency gain of U4 and U5, keeping the ALC loop stable. In LO-band mode, 0.01 to 1 MHz, the VCA on the Wideband Amplifier is set to minimum attenuation by U9, and the output level is controlled by a VCA in the RF Synthesizer. This VCA is controlled by the 0.01 to 1 AGC output of the Wideband Amplifier. Also, during LO-band mode, C30 is switched into the detector circuit. This increases the detector time constant so that the detector operates properly at lower frequencies.

Switching of CR6, CR7, CR9 is controlled by comparators on U6.

17.2.2.2.6 RF-Switching

In generate mode, the output of the Wideband Amplifier is switched by relay K1 to the ATTENUATOR OUT/IN port. This signal then goes through the step attenuator and to the Wattmeter board where it is switched to either the Antenna port or the RF In/Out port. The operator can select the Antenna or RF In/Out port by pulling out or pushing in the variable RF Level control on the front panel.

17.2.2.3 Monitor Mode

In monitor mode, the MON + DSB/GEN input is taken high. This switches a fixed reference into summing amplifier U8, which is set by R58, resulting in a fixed local-oscillator drive level out of Q7. This also energizes relay K1, causing mixer U10 to mix the monitor input from the ATTENUATOR OUT/IN port with the local-oscillator signal.

A portion of the local-oscillator output is sent to the Duplex Generator (A17A3) through the L.O. OFFSET OSC OUT port. The output of mixer U10 is sent through the 20-MHz low-pass filter and then to the Receiver through the 10.7 MHz IF OUT port.

17.2.2.4 Double Sideband-Suppressed Carrier (DSBSC) Mode

For DSBSC mode, the Wideband Amplifier is configured as in the monitor mode, except that modulation is applied to the DSBSC MOD input through the isolation network to mixer U10. The resulting DSBSC output is coupled through relay K1, to the ATTENUATOR OUT/IN port.

17.2.3 DUPLEX GENERATOR BOARD (A17A3)

17.2.3.1 General

The Duplex Generator board provides an RF output whose frequency is offset from the Receiver's center frequency by either a fixed 45 MHz or an adjustable 0 to 10 MHz in 5-kHz steps. The 45-MHz offset is obtained by mixing the local-oscillator signal from the Wideband Amplifier (L.O. OFFSET), which is offset by 10.7 MHz from the desired Receiver signal, with a 34.3-MHz signal generated by a phase-locked-loop (PLL). The 0 to 10-MHz adjustable offset is obtained by mixing the L.O. OFFSET signal with a 0.7 to 10.7-MHz signal. This signal is generated by mixing the 34.3-MHz PLL with a 35 to 45-MHz PLL.

A block diagram of the Duplex Generator board is shown at the end of the section in Figure 17-10, a schematic in Figure 17-11, and the printed wiring board assembly and parts list in Figure 17-12.

17.2.3.2 Phase-Locked-Loop (PLL) Control

The phase-locked-loops on the Duplex Generator board use a PLL integrated circuit (IC). This IC provides digital dividers, control functions, the phase detector, and a reference-frequency oscillator. The reference oscillator is divided-down by the reference divider to set the reference frequency of the PLL. This signal is applied to the phase detector, where it is compared to the output of the divider chain (divide-by-N and divide-by-A). The selection of the dividers (reference, divide-by-N, and divide-by-A) can be programmed by using either hard wiring or serial data lines. The serial-data-programmable IC provides two latched open-drain outputs that can be used for external switching.

17.2.3.3 35 to 45-MHz PLL

17.2.3.3.1 General

The 35 to 45-MHz PLL consists of a serial-input PLL IC, a loop filter, a voltage-controlled oscillator (VCO), an amplifier, and a two-modulus pre-scaler.

The reference oscillator on the PLL IC (U2) uses crystal Y1 to generate a 10.24-MHz source. The reference divider on U2 divides this signal by 2048, providing a reference frequency of 5 kHz. The phase detector then compares this signal to the divided-down VCO output coming from the divide-by-N. The PLL uses a divide-by-32/33, two-modulus pre-scaler (U4) which, in conjunction with dividers N and A, divides the VCO output of 35 to 45 MHz down to 5 kHz. The two-output phase detector is connected to the loop filter.

17.2.3.3.2 Loop Filter

Loop filter U6 sets the bandwidth and stability of the loop and attenuates the reference-frequency components coming from the phase detector. The 3-dB bandwidth of the 35 to 45-MHz loop is 22 Hz. The loop filter incorporates a lead-lag network (R29, R30, and C38) to reduce the resistor values of R21-R25. This allows for a faster loop-lock time. Diodes CR7 and CR8 help the operational amplifier (U6) slew the large-value capacitor (C38). The output of the loop filter tunes the

VCO frequency to the value needed to maintain phase lock.

17.2.3.3.3 VCO and Amplifier

The 35 to 45-MHz VCO (Q3 and Q4) is a series-tuned oscillator that resonates varactor diodes CR5 and CR6 with the inductance in the 26 turns of transformer T1. Transistor Q7 is the VCO ON/OFF switch which is controlled by the PLL IC (U1) via the SW1 output. The amplifier (Q5) following the VCO provides an output of +7 dBm. This signal is attenuated by R39 and R40 before going to the two-modulus prescaler, U4.

17.2.3.4 34.3-MHz PLL

17.2.3.4.1 General

The 34.3-MHz PLL has the same components as the 35 to 45-MHz PLL, except that the PLL IC (U1) is hard-wired to provide one frequency of operation, 34.3 MHz. The PLL IC (U1) uses the 10.24-MHz source from U2. The reference divider on U1 divides this 10.24-MHz signal by 512 to provide a reference frequency of 20 kHz. As with the 35 to 45-MHz PLL, the phase detector then compares this signal to the divided-down VCO output coming from the divide-by-N. The PLL uses a divide-by-32/33, two-modulus prescaler (U3) which, in conjunction with dividers N and A, divides the VCO output of 34.3 MHz down to 20 kHz. The two-output phase detector is connected to the loop filter.

17.2.3.4.2 Loop Filter

Loop filter U5 sets the bandwidth and stability of the loop and attenuates the reference-frequency component coming from the phase detector. The 3-dB bandwidth of the 34.3-MHz PLL is 5 Hz. The loop filter incorporates a lead-lag network (R8, R73, and C85) to reduce the resistor values of R1-R4. This allows for a faster loop-lock time. Diodes CR14 and CR15 help the operational amplifier (U5) slew the large-value capacitor (C85). The output of the loop filter tunes the VCO frequency to the value needed to maintain phase lock.

17.3.3.4.3 VCO and Amplifier

The 34.3-MHz VCO (Q1) is a Colpitts-type oscillator that resonates CR2, CR3, C10, C11, C47, and C68 with the inductance of transformer T1. Capacitor C68 is adjusted to provide a tuning voltage of 8 to 10V at TP1 when the loop is locked. Transistor Q8 is the VCO ON/OFF switch, which is controlled by PLL IC U1 via the SW2 output. The amplifier (Q2) following the VCO provides an output of +7 dB. This signal is attenuated by R37 and R38 before going to the two-modulus pre-scaler, U3.

17.2.3.5 Offset Selection

The 45-MHz offset is generated by routing the 34.3-MHz PLL through relay U7 (which is controlled by the SW1 output on U2), to the L.O. offset-mixer, U10. Here the 34.3-MHz signal is mixed with the L.O. OFFSET signal coming from the Wideband Amplifier board. Amplifier U14 provides a gain of 8 dBm to the −20 dBm L.O. OFFSET input signal. The output of the L.O. mixer (U10) is routed through relay U12 to the Duplex output port, J6. To generate the 0 to 10-MHz offset, mixer U9 mixes the 34.3-MHz PLL with the 35 to 45-MHz PLL. The output of mixer U9 is low-pass filtered by C54, C56, and L8 to obtain the difference product. This signal is amplified by amplifier Q6 from approximately 0 dBm to +7 dBm. The output of amplifier Q6 is applied to the L.O. offset mixer, U10, where it is mixed with the L.O. OFFSET signal and routed to the Duplex output port, J6.

17.2.3.6 Modulation

FM modulation of the Duplex Generator is accomplished by directly modulating the VCO in the 34.3-MHz PLL. The sensitivity of this input port is adjusted by R69 to 5 kHz/V. The frequency response of the modulation input is 1 Hz to 20 kHz.

17.2.3.7 Board Control

The Duplex Generator board is controlled by PLL IC U2, which uses the RF control bus coming from the Processor Interface board (A11). (See the A11 section, paragraph 13.2.1.3 for a description of this bus.) The PLL IC uses the last 19 bits of the RF data bus. The first two bits of these 19 bits control the two output switches (SW1 and SW2), as shown in Table 17-1. The next ten bits control the divide-by-N, and the last seven bits control the divide-by-A.

Table 17-1. Switch Control

Switch Position		Result
SW1	SW2	
0	0	0 to 10-MHz OFFSET
0	1	Not Allowed
1	0	45-MHz OFFSET
1	1	Duplex Generator OFF

Table 17-2. RF Input Module-Wirelist

1	2	3	4	5	6	7	8	9
WIRE NO.	COLOR / SIZE AWG	WIRE RUNS FROM	NOTE OR VIEW	TO	NOTE OR VIEW	FUNCTION ROUTING REMARKS	APPROX LENGTH	USE FIND NO.
		A4-E1		C10		+5 Volts		
		A4-E2				SPARE		
		A4-E3		C11		+33 Volts		
		A4-E4		A4S1 Center Pin		OFFSET ON/OFF		
		A4-E5		C8		OFFSET ATTEN EN		
		A4-E6		W7		DATA CLOCK		
		A4-E7		W5		DATA LATCH		
		A4-E8		W6		OFFSET DATA		
		A4-E9		C5		ANT ENABLE		
		A4-E10		C2		RF INPUT PWR		
		A4-E11		E1		GND		
		A4-E12		E3		GND		
		A4-E13		FL4		.01-1 MHz AGC		
		A4-E14		FL5		AM MOD +DC REF.		
		A4-E15		C6		EXT FWD PWR		
		A4-E16		FL3		WB AMP HI/LO		
		A4-E17		C7		EXT RFL PWR		
		A4-E18		W8		OFFSET MOD		
		A4-E19		FL8		DSBSC MOD		
		A4-E-20		C4		OVERTEMP		
		A4-E21		FL6		CARRIER + MOD LVL		
		A4-E22		FL2		MON + DSB/GEN		
		A4-E23		FL1		+12V		
		A4-E24		FL7		-12V		
		A4-E25		S1-4		RF ATTEN 130		
		A4-E26		S1-5		RF ATTEN 120		
		A4-E27		S1-6		RF ATTEN 110		
		A4-E28		S1-7		RF ATTEN 100		
		A4-E29		S1-8		RF ATTEN 90		
		A4-E30		S1-9		RF ATTEN 80		
		A4-E31		S1-10		RF ATTEN 70		
		A4-E32		S1-11		RF ATTEN 60		
		A4-E33		S1-12		RF ATTEN 50		
		A4-E34		S1-13		RF ATTEN 40		
		A4-E35		S1-14		RF ATTEN 30		
		A4-E36		S1-1		RF ATTEN 20		
		A4-E37		S1-2		RF ATTEN 10		
		A4-E38		S1-3		RF ATTEN 0		
		A4-E39		E2		GND		
		A4-E40				SPARE		

Table 17-2. RF Input Module–Wirelist (Cont)

1	2	3	4	5	6	7	8	9
WIRE NO.	COLOR / SIZE AWG	WIRE RUNS FROM	NOTE OR VIEW	WIRE RUNS TO	NOTE OR VIEW	FUNCTION ROUTING REMARKS	APPROX LENGTH	USE FIND NO.
		C10		S1-15		+5 Volts		
		C9		FL1		+12		
		C9		C3		+12		
		FL7		C1		-12		
		E3		A4S1 TOP PIN		GND		

Figure 17-1. Block Diagram

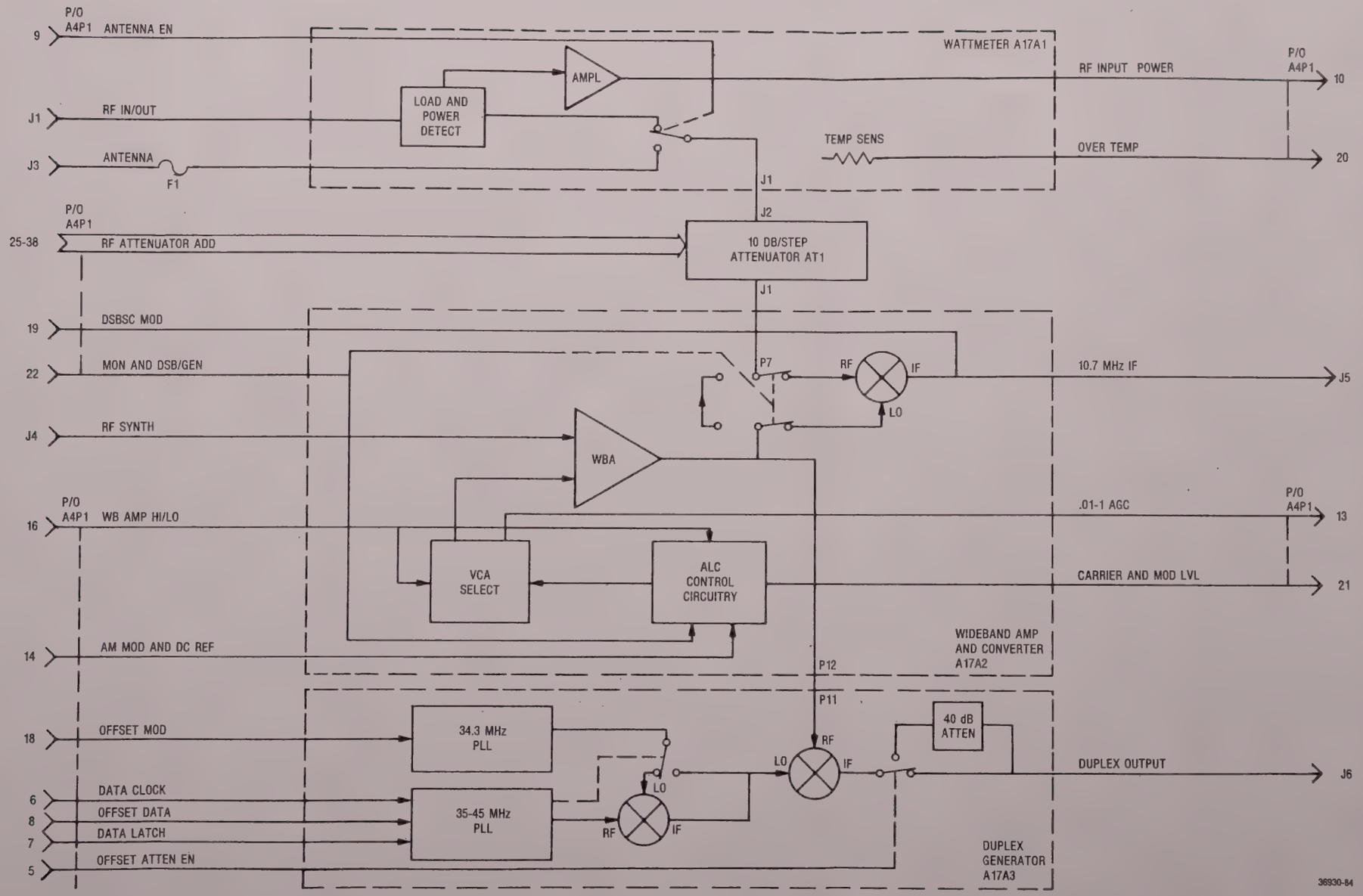

RF INPUT MODULE (A17)

(RTL-1021A)

Figure 17-2. Interconnect Diagram

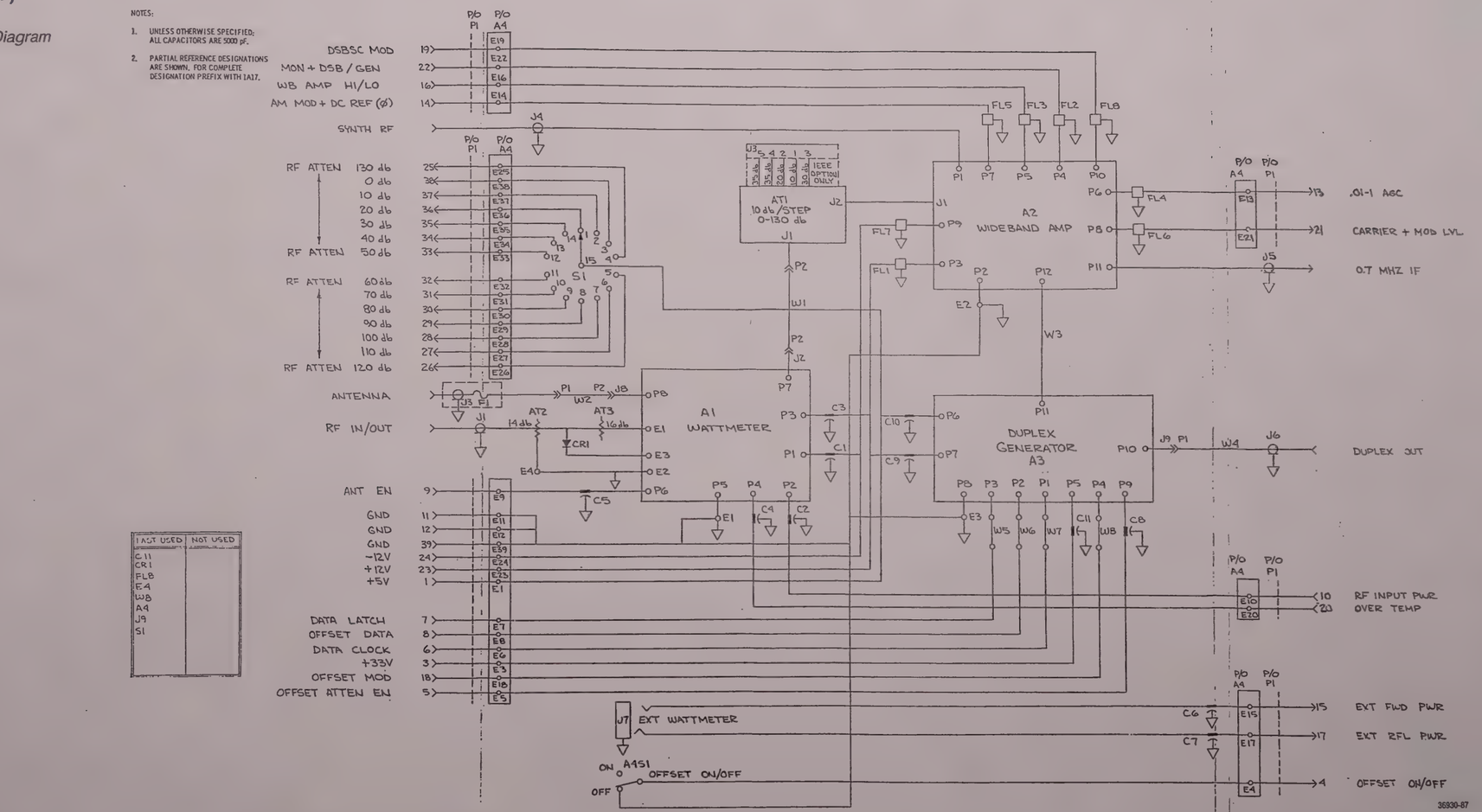

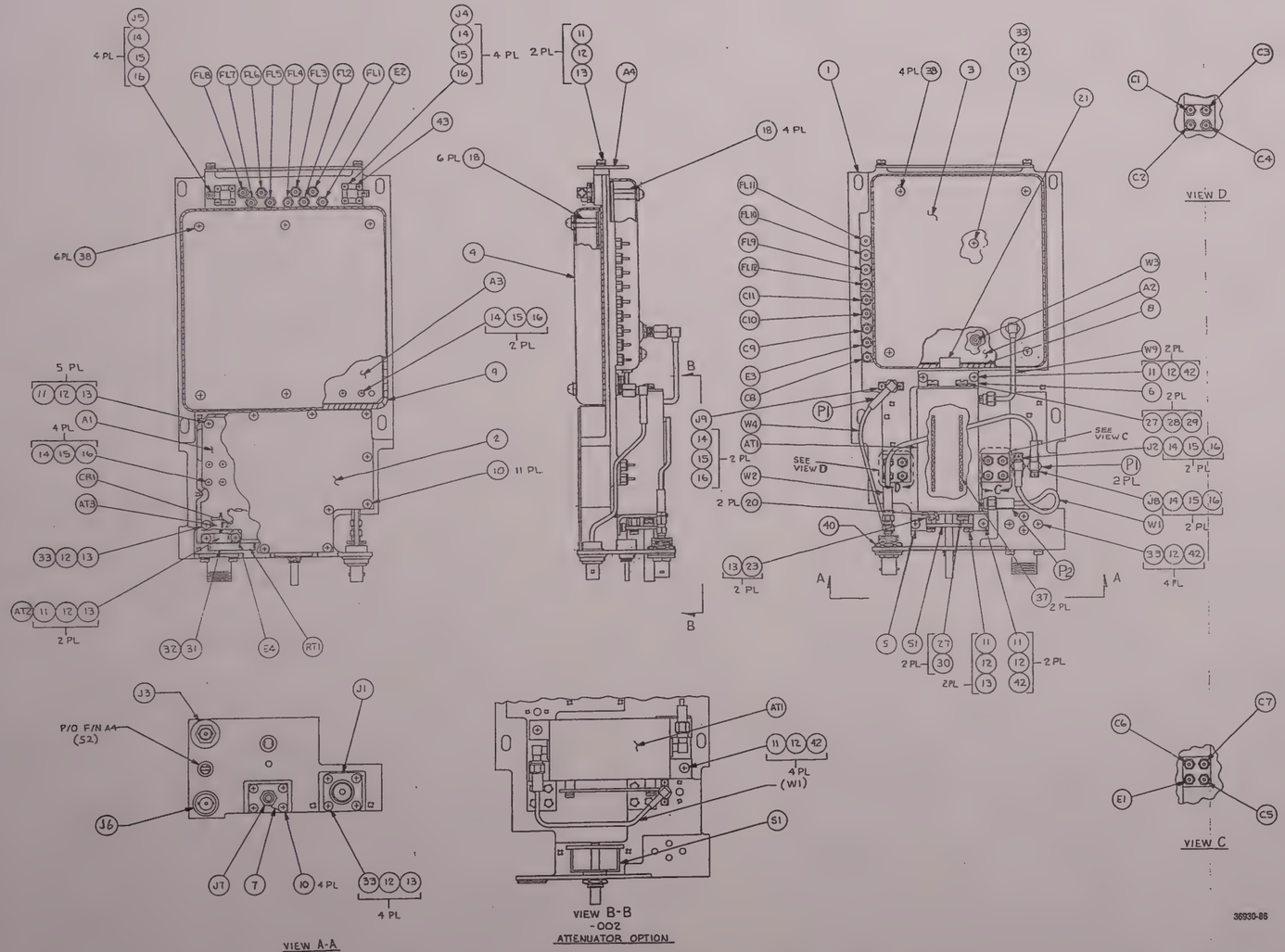

RF INPUT MODULE (A17)

(RTL-1021A)

Figure 17-3a. Assembly and Parts List (Sheet 1 of 2)

Find No.	Qty. Req.	Part No.	Nomenclature	Part Value
002	1	15-80344B77	COVER, WATTMETER ASSY	
003	1	15-80344B76	COVER, WB AMPLIFIER ASSEMBLY	
004	1	15-80344B73	COVER, DUPLEX GEN. ASSEMBLY	
005	1	07-80344B81	BRACKET, ATTENUATOR FRONT	
006	1	07-80334B80	BRACKET, ATTENUATOR REAR	
007	1	07-80844B82	BRACKET, CONNECTOR MOUNT	
008	1	32-80342B94	GASKET,EMI	
009	1	32-80342B95	GASKET,EMI	
010	15	03-139461	SCREW	.112-40X.250
011	19	03-140011	SCREW	.112-40X.250
012	27	04-9777	WASHER, LOCK	.112
013	19	04-140358	WASHER	.112
014	20	03-140041	SCREW	.086-56X.250
015	20	04-400139	WASHER, LOCK	.086
016	20	04-80375B52	WASHER	.086
018	10	43-80375B21	STANDOFF, MALE-FEMALE	
020	2	03-138374	SCREW	.112-40X.187
023	2	43-80342B49	SPACER	
027	4	03-139749	SCREW	.138-32X.250
028	2	04-9795	WASHER, LOCK	.138
029	2	04-118786	WASHER	.138
030	2	04-2645	WASHER, EXTERNAL LOCK #6	.138
031	1	26-80344B75	HEATSINK, ATTENUATOR	
033	10	03-139599	SCREW	.112-40X.312
035	1	84-80344B74	PWB, FLEX, RF INTERCONN	
037	AR	32-80344B91	GASKET, MESH	
038	10	03-129641	SCREW, PH W/CAPT LOCK WASHER	4-40X.250
040	1	04-2635	WASHER, LOCK	.500
042	8	04-490774	WASHER	
043	1	32-80375B13	GASKET, SMA	
A 001	1	RTL-4158A	WATT METER ASSY(A17A1)	
A 002	1	RTL-4156A	WIDE BND AMPL.ASSY(A17A2)	
A 003	1	RTL-4157A	DUPLEX GEN.ASSY(A17A3)	
A 004	1	01-80344B92	PWB, INTERCONNECT	
AT001	1	01-80343B83	ATTENUATOR	
AT002	1	17-80377A95	ATTENUATOR,POWER	
AT003	1	01-80343B81	ATTENUATOR,16DB	
C 001	1	21-80342B51	CAPACITOR	5000PF-6MV-500
C 002	1	21-80342B51	CAPACITOR	5000PF-6MV-500
C 003	1	21-80342B51	CAPACITOR	5000PF-6MV-500
C 004	1	21-80342B51	CAPACITOR	5000PF-6MV-500
C 005	1	21-80342B51	CAPACITOR	5000PF-6MV-500
C 006	1	21-80342B51	CAPACITOR	5000PF-6MV-500
C 007	1	21-80342B51	CAPACITOR	5000PF-6MV-500
C 008	1	21-80342B51	CAPACITOR	5000PF-6MV-500
C 009	1	21-80342B51	CAPACITOR	5000PF-6MV-500
C 010	1	21-80342B51	CAPACITOR	5000PF-6MV-500
C 011	1	21-80342B51	CAPACITOR	5000PF-6MV-500
CR001	1	48-87643C01	DIODE	
FL001	1	91-80342B25	FILTER	
FL002	1	91-80342B25	FILTER	
FL003	1	91-80342B25	FILTER	
FL004	1	91-80342B25	FILTER	
FL005	1	91-80342B25	FILTER	
FL006	1	91-80342B25	FILTER	
FL007	1	91-80342B25	FILTER	
FL008	1	91-80342B25	FILTER	
FL009	1	91-80342B25	FILTER	
FL010	1	91-80342B25	FILTER	
FL011	1	91-80342B25	FILTER	
FL012	1	91-80342B25	FILTER	
J 001	1	28-80342B87	CONNECTOR, MODIFIED	
J 002	1	28-80342B86	CONNECTOR	MODIFIED
J 003	1	03-80375B27	CONNECTOR	
J 004	1	28-80342B89	CONNECTOR	MODIFIED
J 005	1	28-80342B89	CONNECTOR	MODIFIED
J 006	1	28-80342B90	CONNECTOR, BNC	
J 007	1	09-80331A70	CONNECTOR	PHONE JACK
J 008	1	28-80342B88	CONNECTOR	MODIFIED
J 009	1	28-80342B88	CONNECTOR	MODIFIED
J 010	1	09-80340B39	CONNECTOR	
P 001	3	09-80331A75	CONNECTOR	
P 001	1	09-80331A75	CONNECTOR	
P 002	1	09-80343B86	CONNECTOR	
R 003	1	05-00185A21	RESISTOR	68-5-1/8 (NOM)
RT001	1	05-80372B71	THERMISTOR	
S 001	1	40-80335A74	SWITCH	WAFER
S 002	1	40-80335A80	SWITCH, TOGGLE	SPDT
W 001	1	30-80344B06	CABLE ASSEMBLY-W1	
W 002	1	30-80344B08	CABLE ASSEMBLY-W2	ANTENNA/A1
W 003	1	29-80344B78	TERMINAL, MODIFIED	
W 004	1	30-80344B09	CABLE ASSY-W4, DUPLEX/A3	
W 009	1	30-80344B17	CABLE ASSEMBLY, W9	

Standard RF Input Kit

001	1	RTL-1021A	RF INPUT MODULE ASSY(A17)	
005	1	36-80335A88	KNOB, SKIRTED	
007	2	04-80335A99	WASHER	.156

RF INPUT MODULE

RF INPUT FLEX STANDARD

Figure 17-3b. Printed Wiring Board Assembly and Parts List (Sheet 2 of 2)

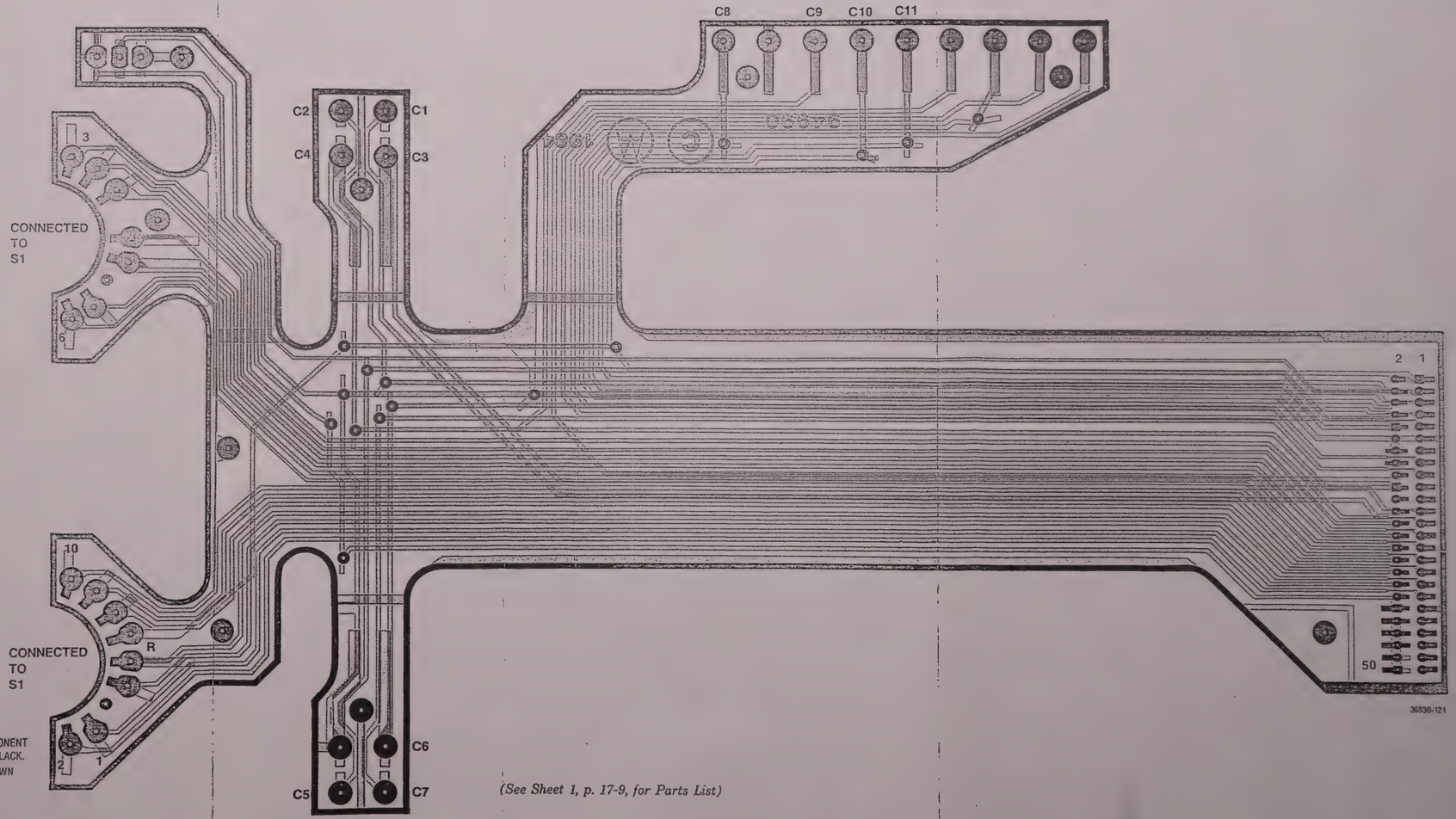

COMPONENTS AND COMPONENT SIDE TRACK SHOWN IN BLACK.
SOLDER-SIDE TRACK SHOWN IN ORANGE

(See Sheet 1, p. 17-9, for Parts List)

Figure 17-4. Block Diagram

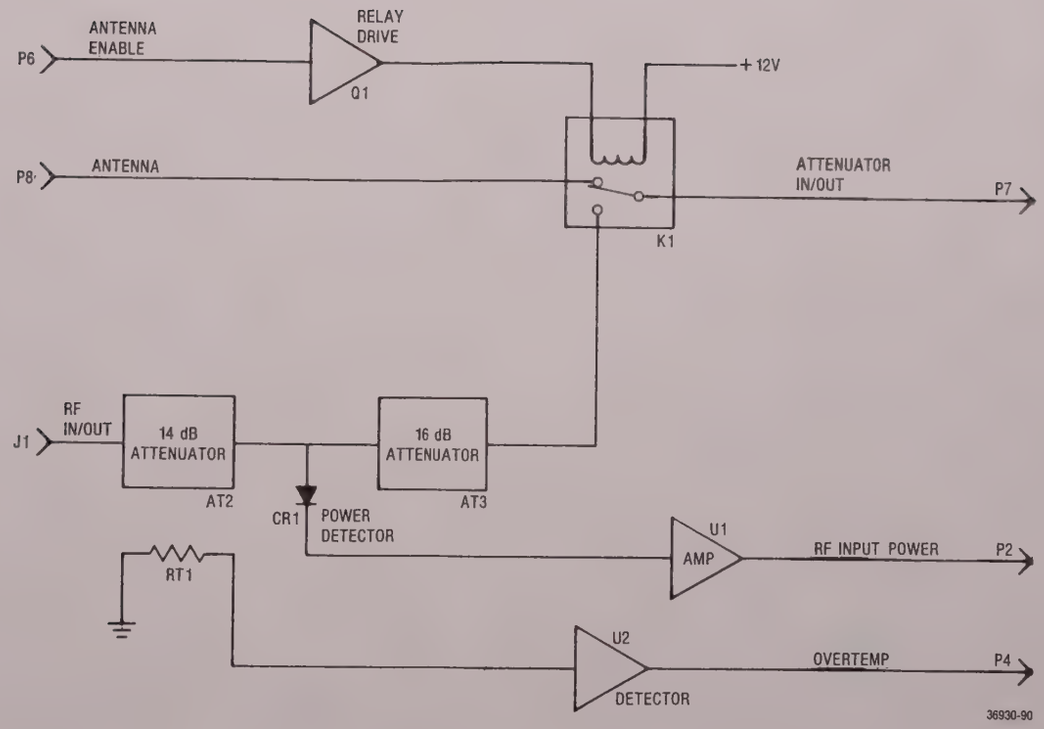

RF INPUT MODULE

RF WATTMETER BOARD (A17A1)

(RTL-4158A)

Figure 17-5. Schematic

NOTES:

1. PARTIAL REFERENCE DESIGNATIONS ARE SHOWN. FOR COMPLETE DESIGNATIONS PREFIX WITH 1A17A1, EXCEPT AS NOTED.
2. UNLESS OTHERWISE SPECIFIED
   ALL RESISTORS ARE IN OHMS ± 5 PCT, 1/4 WATT.
   ALL CAPACITORS ARE IN UF.
   ALL INDUCTORS ARE IN MH.
   ALL VOLTAGES ARE IN DC.
3. FOR REFERENCE DRAWINGS REFER TO :
   01-P22170E ASSEMBLY DRAWING
   01-P22280E PRINTED WIRING BOARD ASSEMBLY
   12-P22283E TEST PROCEDURE.
4. PARTS SHOWN TO BE ASSEMBLED AT TEST.

REF DES	DEVICE	GND	+12	-12	NO CONNECT
U1	LM324 N	11	4	11	1,2,3
U2	LM393 N	4	8		1,2,3

HIGHEST USED	NOT USED
C8	
CR3	CR2, CR1
K1	
L2	L1
P8	
R30	R28
RT2	
U2	
VR1	

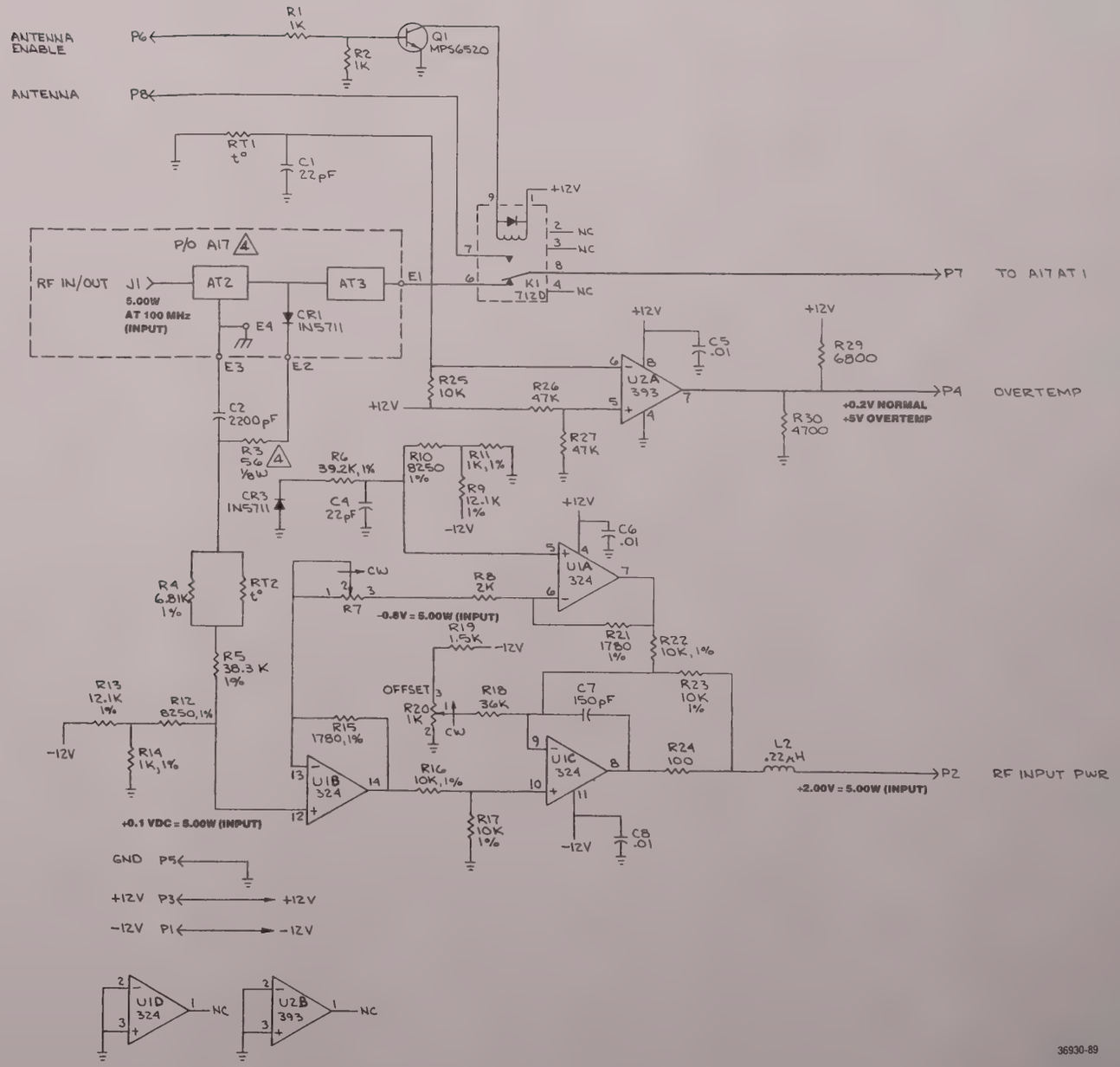

36930-89

WARNING:
STATIC-SENSITIVE PARTS
HANDLE APPROPRIATELY

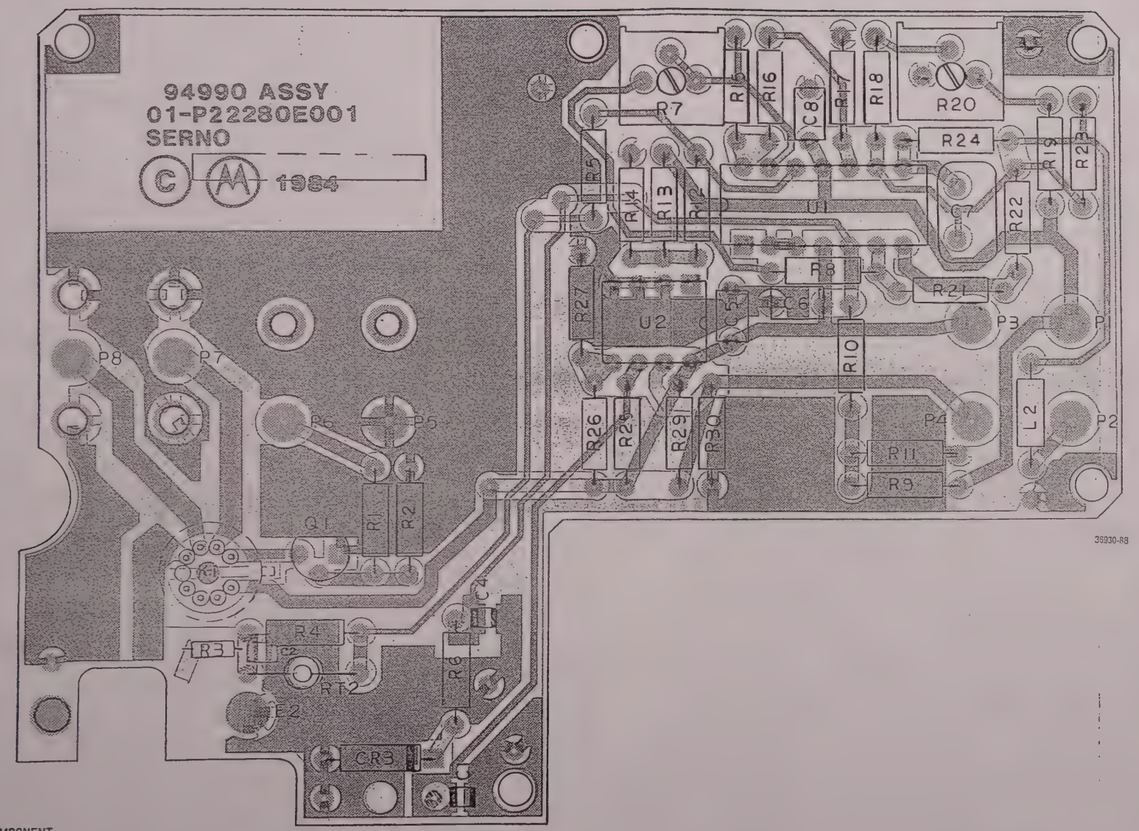

39330-R8

COMPONENTS AND COMPONENT SIDE TRACK SHOWN IN BLACK.
SOLDER-SIDE TRACK SHOWN IN ORANGE

WATTMETER BOARD (A17A1)
RTL-4158A

Find No.	Qty. Req.	Part No.	Nomenclature	Part Value
C 001	1	21-80370A14	CAPACITOR	22PF-5-100
C 002	1	21-80370A24	CAPACITOR	2200PF-20-100
C 004	1	21-80370A14	CAPACITOR	22PF-5-100
C 005	1	21-80342B09	CAPACITOR	.01UF-20-50
C 006	1	21-80342B09	CAPACITOR	.01UF-20-50
C 007	1	21-80369A94	CAPACITOR	150PF-5-500
C 008	1	21-80342B09	CAPACITOR	.01UF-20-50
CR003	1	48-87643C01	DIODE	
K 001	1	80-80343B61	RELAY	
L 002	1	24-80369A25	COIL	.22UH
P 001	1	09-80344B25	RECEPTACLE	
P 002	1	09-80344B25	RECEPTACLE	
P 003	1	09-80344B25	RECEPTACLE	
P 004	1	09-80344B25	RECEPTACLE	
P 005	1	09-80344B25	RECEPTACLE	
P 006	1	09-80344B25	RECEPTACLE	
P 007	1	09-80344B25	RECEPTACLE	
P 008	1	09-80344B25	RECEPTACLE	
Q 001	1	48-80340B86	TRANSISTOR	MPS6520
R 001	1	06-11009C49	RESISTOR	1K-5-1/4
R 002	1	06-11009C49	RESISTOR	1K-5-1/4
R 004	1	06-10621C75	RESISTOR	6.81K-1-1/4
R 005	1	06-10621D48	RESISTOR	38.3K-1-1/4
R 006	1	06-10621D49	RESISTOR	39.2K-1-1/4
R 007	1	18-83452F10	RESISTOR,VARIABLE	1K
R 008	1	06-11009C56	RESISTOR	2.0K-5-1/4
R 009	1	06-10621C99	RESISTOR	12.1K-1-1/4
R 010	1	06-10621C83	RESISTOR	8.25K-1-1/4
R 011	1	06-10621B94	RESISTOR	1K-1-1/4
R 012	1	06-10621C83	RESISTOR	8.25K-1-1/4
R 013	1	06-10621C99	RESISTOR	12.1K-1-1/4
R 014	1	06-10621B94	RESISTOR	1K-1-1/4
R 015	1	06-10621C19	RESISTOR	1.78K-1-1/4
R 016	1	06-10621C91	RESISTOR	10K-1-1/4
R 017	1	06-10621C91	RESISTOR	10K-1-1/4
R 018	1	06-11009C86	RESISTOR	36K-5-1/4
R 019	1	06-11009C53	RESISTOR	1.5K-5-1/4
R 020	1	18-83452F10	RESISTOR,VARIABLE	1K
R 021	1	06-10621C19	RESISTOR	1.78K-1-1/4
R 022	1	06-10621C91	RESISTOR	10K-1-1/4
R 023	1	06-10621C91	RESISTOR	10K-1-1/4
R 024	1	06-11009C25	RESISTOR	100-5-1/4
R 025	1	06-11009C73	RESISTOR	10K-5-1/4
R 026	1	06-11009C89	RESISTOR	47K-5-1/4
R 027	1	06-11009C89	RESISTOR	47K-5-1/4
R 029	1	06-11009C69	RESISTOR	6.8K-5-1/4
R 030	1	06-11009C65	RESISTOR	4.7K-5-1/4
RT002	1	08-83600K05	THERMISTOR	
U 001	1	51-80396A16	INTEGRATED CIRCUIT	LM324N SCREENED
U 002	1	51-80345A10	INTEGRATED CIRCUIT	LM393N SCREENED

Figure 17-6. Printed Wiring Board Assembly and Parts List

Figure 17-7. Block Diagram

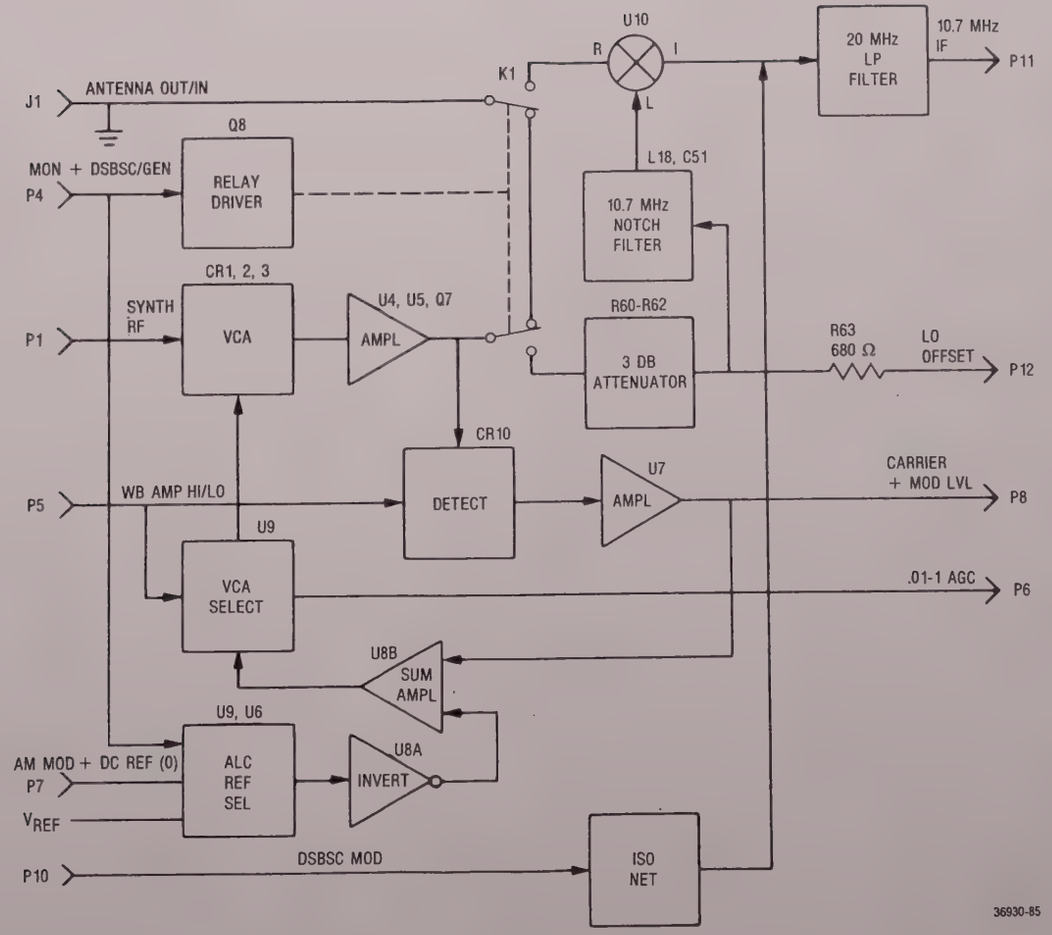

Figure 17-8. Schematic

NOTES:

1. PARTIAL REFERENCE DESIGNATIONS ARE SHOWN. FOR COMPLETE DESIGNATIONS PREFIX WITH A7A2.
2. UNLESS OTHERWISE SPECIFIED:
   ALL RESISTORS ARE IN OHMS ± 5 PCT, 1/4 WATT.
   ALL CAPACITORS ARE IN UF.
   ALL INDUCTORS ARE IN UH.
   ALL VOLTAGES ARE IN DC.
3. DEVICE TYPE NUMBER AND CONNECTION NOT SHOWN ON SYMBOL ARE LISTED IN TABLE 1. UNDERLINED PORTION OF TYPE NUMBER IS USED AS A CODE TO IDENTIFY DEVICES ON DIAGRAM.
4. SELECT IN TEST. NOMINAL VALUE SHOWN.
5. FOR REFERENCE DRAWINGS REFER TO:

01-P22290E	ASSEMBLY DRAWING
12-P22293E	TEST PROCEDURE

REF DES	DEVICE	GND	+V	-V	NO CONNECT
U1	MC78M08CTDS	2	1		
U2	CA3140E	4	7		1,5,8
U3					
U4	GPD321	3			
U5	GPD331	3			
U6	LM339NDS		3	12	
U7	CA3160E		7		1,5,8
U8	CA3240E		8	4	
U9	HI-201-5	5	10,13	4	12
U10	TFM-2	3			

LAST USED	NOT USED
C55	C47,48,49,51
CR18	CR8,CR12
J1	
K1	
L22	L4,L13,L18
P12	
Q8	
R72	R5,49,50,55
U10	U3
VR3	VR1

WARNING:
STATIC-SENSITIVE PARTS
HANDLE APPROPRIATELY

Figure 17-9. Printed Wiring Board Assembly and Parts List

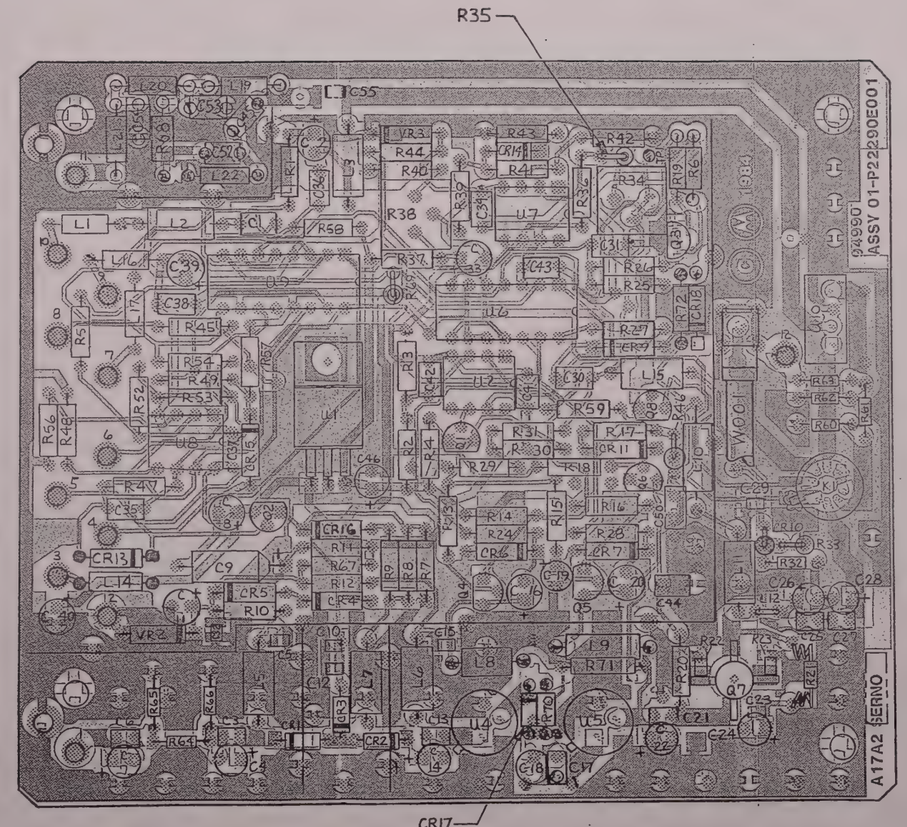

COMPONENTS AND COMPONENT SIDE TRACK SHOWN IN BLACK. SOLDER-SIDE TRACK SHOWN IN ORANGE.

WIDEBAND AMPLIFIER BOARD (A17A2)
RTL-4156A

Find No.	Qty. Req.	Part No.	Nomenclature	Part Value
C 001	1	21-80342B10	CAPACITOR	.1UF-20-50
C 002	1	23-83341B15	CAPACITOR	10UF-20-50
C 003	1	21-80339B56	CAPACITOR	390PF-5-100
C 004	1	23-83441B15	CAPACITOR	1.0UF-20-35
C 005	1	21-80342B50	CAPACITOR	470PF-5-50
C 006	1	21-80339B69	CAPACITOR	680PF-10-100
C 007	1	23-83441B15	CAPACITOR	1.0UF-20-35
C 008	1	23-83341B15	CAPACITOR	10UF-20-50
C 009	1	23-80341B03	CAPACITOR	10UF-10-35
C 010	1	21-80370A24	CAPACITOR	2200PF-20-50
C 011	1	23-80341B05	CAPACITOR	10UF-20-10
C 012	1	21-80370A23	CAPACITOR	220PF-20-50
C 013	1	21-80339B66	CAPACITOR	390PF-5-100
C 014	1	23-83441B15	CAPACITOR	1.0UF-20-35
C 015	1	21-80342B50	CAPACITOR	470PF-5-50
C 016	1	23-83341B15	CAPACITOR	10UF-20-50
C 017	1	21-80339B69	CAPACITOR	680PF-10-100
C 018	1	23-83441B15	CAPACITOR	1.0UF-20-35
C 019	1	23-83441B15	CAPACITOR	1.0UF-20-35
C 020	1	23-80341B15	CAPACITOR	10UF-20-50
C 021	1	21-80339B69	CAPACITOR	680PF-10-100
C 022	1	23-83441B15	CAPACITOR	1.0UF-20-35
C 023	1	21-80370A24	CAPACITOR	2200PF-20-50
C 024	1	23-83441B15	CAPACITOR	1.0UF-20-35
C 025	1	21-80339B66	CAPACITOR	390PF-5-100
C 026	1	23-83441B15	CAPACITOR	1.0UF-20-35
C 027	1	21-80339B69	CAPACITOR	680PF-10-100
C 028	1	23-83441B15	CAPACITOR	1.0UF-20-35
C 029	1	21-80370A22	CAPACITOR	1000PF-20-50
C 030	1	21-80342B10	CAPACITOR	.1UF-20-50
C 031	1	21-80342B10	CAPACITOR	.1UF-20-50
C 032	1	21-80370A24	CAPACITOR	2200PF-20-50
C 033	1	23-83441B15	CAPACITOR	1.0UF-20-35
C 034	1	21-80342B10	CAPACITOR	.1UF-20-50
C 035	1	21-80341B52	CAPACITOR	1300PF-5-50
C 036	1	21-80342B10	CAPACITOR	.1UF-20-50
C 037	1	21-80342B10	CAPACITOR	.1UF-20-50
C 038	1	21-80342B10	CAPACITOR	.1UF-20-50
C 039	1	23-80341B15	CAPACITOR	10UF-20-50
C 040	1	23-80341B15	CAPACITOR	10UF-20-50
C 041	1	21-80342B10	CAPACITOR	.1UF-20-50
C 042	1	21-80342B10	CAPACITOR	.1UF-20-50
C 043	1	21-80342B10	CAPACITOR	.1UF-20-50
C 044	1	21-80342B10	CAPACITOR	.1UF-20-50
C 045	1	21-00850118	CAPACITOR	100PF-5-500
C 046	1	23-80341B15	CAPACITOR	10UF-20-50
C 050	1	21-80339B72	CAPACITOR	.001UF-10-200
C 052	1	21-00850118	CAPACITOR	100PF-5-500
C 053	1	21-80341B57	CAPACITOR	180PF-5-50
C 054	1	21-80341B57	CAPACITOR	180PF-5-50
C 055	1	21-80372B72	CAPACITOR	.056UF-10-50
CR001	1	48-80342B19	DIODE	
CR002	1	48-80342B19	DIODE	
CR003	1	48-80342B19	DIODE	
CR004	1	48-84463K02	DIODE	
CR005	1	48-84463K02	DIODE	
CR006	1	48-84463K02	DIODE	
CR007	1	48-84463K02	DIODE	
CR009	1	48-84463K02	DIODE	
CR010	1	48-80395A27	DIODE	
CR011	1	48-84463K02	DIODE	
CR013	1	48-87643C01	DIODE	
CR014	1	48-80396A27	DIODE	
CR015	1	48-84463K02	DIODE	
CR016	1	48-84463K02	DIODE	
CR017	1	48-80342B19	DIODE	
CR018	1	48-84463K02	DIODE	
K 001	1	80-80343B61	RELAY	
L 001	1	48-80372B82	COIL, SHIELDED	0.15UH
L 002	1	24-83961B01	CHOKE	
L 003	1	24-83961B01	CHOKE	
L 005	1	24-83961B01	CHOKE	
L 006	1	24-83961B01	CHOKE	
L 007	1	24-83961B01	CHOKE	
L 008	1	24-83961B01	CHOKE	
L 009	1	24-83961B01	CHOKE	
L 010	1	24-80344B70	COIL, SHIELDED	1000UH
L 011	1	24-83961B01	CHOKE	
L 012	1	24-80342B70	COIL	
L 014	1	25-80342B79	COIL,TOROID	
L 015	1	24-83951B01	CHOKE	
L 016	1	24-80359A23	COIL	.15UH

WIDEBAND AMPLIFIER BOARD (A17A2) (Cont)
RTL-4156A

Find No.	Qty. Req.	Part No.	Nomenclature	Part Value
L 017	1	24-80369A23	COIL	.15UH
L 019	1	48-80372B79	COIL, SHIELDED	0 82UH
L 020	1	48-80372B80	COIL, SHIELDED	1.50UH
L 021	1	48-80372B81	COIL, SHIELDED	0.82UH
L 022	1	48-80372B81	COIL, SHIELDED	0.12UH
P 001	1	09-80344B25	RECEPTACLE	
P 002	1	09-80344B25	RECEPTACLE	
P 003	1	09-80344B25	RECEPTACLE	
P 004	1	09-80344B25	RECEPTACLE	
P 005	1	09-80344B25	RECEPTACLE	
P 006	1	09-80344B25	RECEPTACLE	
P 007	1	09-80344B25	RECEPTACLE	
P 008	1	09-80344B25	RECEPTACLE	
P 009	1	09-80344B25	RECEPTACLE	
P 010	1	09-80344B25	RECEPTACLE	
P 011	1	09-80344B25	RECEPTACLE	
P 012	1	09-80344B25	RECEPTACLE	
Q 001	1	48-80340B85	TRANSISTOR	MPS6519
Q 002	1	48-80340B86	TRANSISTOR	MPS6520
Q 003	1	48-80340B86	TRANSISTOR	MPMP56520
Q 004	1	48-80340B85	TRANSISTOR	MPS6519
Q 005	1	48-80340B85	TRANSISTOR	MPS6519
Q 006	1	48-80340B85	TRANSISTOR	MPS6519
Q 007	1	48-80340B48	TRANSISTOR	
Q 008	1	48-80340B86	TRANSISTOR	MPS6520
R 001	1	06-11009C46	RESISTOR	750-5-1/4
R 002	1	06-10621C35	RESISTOR	2.61K-1-1/4
R 003	1	06-10621C75	RESISTOR	6.81K-1-1/4
R 004	1	06-11009C73	RESISTOR	10K-5-1/4
R 006	1	06-00124A49	RESISTOR	1K-5-1/4
R 007	1	06-11009C37	RESISTOR	330-5-1/4
R 008	1	06-11009C41	RESISTOR	470-5-1/4
R 009	1	06-11009C17	RESISTOR	47-5-1/4
R 010	1	06-11009C25	RESISTOR	100-5-1/4
R 011	1	06-10621C37	RESISTOR	2.74K-1-1/4
R 012	1	06-11009C25	RESISTOR	100-5-1/4
R 013	1	06-11009C18	RESISTOR	51-5-1/4
R 014	1	06-11009C23	RESISTOR	82-5-1/4
R 015	1	06-11009C18	RESISTOR	51-5-1/4
R 016	1	06-11009C13	RESISTOR	33-5-1/4
R 017	1	06-10621C23	RESISTOR	1.96K-1-1/4
R 018	1	06-10621C67	RESISTOR	5.62K-1-1/4
R 019	1	06-00124A71	RESISTOR	8.2K-5-1/4
R 020	1	06-11009C53	RESISTOR	1.5K-5-1/4
R 021	1	06-11041C49	RESISTOR	220-5-1/8
R 022	1	06-80340B14	RESISTOR	12-5-.1
R 023	1	06-80340B14	RESISTOR	12-5-.1
R 024	1	06-11009C55	RESISTOR	1.8K-5-1/4
R 025	1	06-11009C87	RESISTOR	39K-5-1/4
R 026	1	06-11009C73	RESISTOR	10K-5-1/4
R 027	1	06-11009C55	RESISTOR	1.8K-5-1/4
R 028	1	06-11009C55	RESISTOR	1.8K-5-1/4
R 029	1	06-10621C85	RESISTOR	8.66K-1-1/4
R 030	1	06-10621B78	RESISTOR	681-1-1/4
R 031	1	06-11009C85	RESISTOR	33K-5-1/4
R 032	1	06-11041C41	RESISTOR	100-5-1/8
R 033	1	06-11041C65	RESISTOR	1K-5-1/8
R 034	1	18-83452F12	RESISTOR,VARIABLE	5K
R 035	1	06-00124A61	RESISTOR	3.3K-5-1/4
R 036	1	06-11009C89	RESISTOR	47K-5-1/4
R 037	1	06-11009C71	RESISTOR	8.2K-5-1/4
R 038	1	18-83452F10	RESISTOR,VARIABLE	1K
R 039	1	06-11009C85	RESISTOR	33K-5-1/4
R 040	1	06-11009C45	RESISTOR	680-5-1/4
R 041	1	06-11009C66	RESISTOR	5.1K-5-1/4
R 042	1	06-11009C89	RESISTOR	47K-5-1/4
R 043	1	06-11009C65	RESISTOR	4.7K-5-1/4
R 044	1	06-11009C48	RESISTOR	910-5-1/4
R 045	1	06-11009C42	RESISTOR	510-5-1/4
R 046	1	06-10621D42	RESISTOR	33.2-1-1/4
R 047	1	06-11009D15	RESISTOR	510K-5-1/4
R 048	1	06-11009C78	RESISTOR	16K-5-1/4
R 049	1	06-11009C61	RESISTOR	3.3K-5-1/4
R 051	1	06-11009D06	RESISTOR	220K-5-1/4
R 052	1	06-11009D06	RESISTOR	220K-5-1/4
R 053	1	06-11009C82	RESISTOR	24K-5-1/4
R 054	1	06-11009C90	RESISTOR	51K-5-1/4
R 056	1	06-11009C97	RESISTOR	100K-5-1/4
R 057	1	06-11009C97	RESISTOR	100K-5-1/4
R 058	1	06-11009B05	RESISTOR	200K-5-1/4
R 059	1	06-11009C71	RESISTOR	8.2K-5-1/4
R 060	1	06-11041C41	RESISTOR	100-5-1/8
R 061	1	06-11041C37	RESISTOR	68-5-1/8
R 062	1	06-11041C41	RESISTOR	100-5-1/8
R 063	1	06-00185A45	RESISTOR	680-5-1/8
R 064	1	06-11041A23	RESISTOR	18-5-1/8
R 065	1	06-11041C52	RESISTOR	300-5-1/8
R 066	1	06-11041C52	RESISTOR	300-5-1/8
R 067	1	06-11009C67	RESISTOR	5.6K-5-1/4
R 068	1	06-11009C18	RESISTOR	51-5-1/4
R 069	1	06-11009C73	RESISTOR	10K-5-1/4
R 070	1	06-00185A37	RESISTOR	330-5-1/8
R 071	1	06-00124A41	RESISTOR	470-5-1/4
R 072	1	06-00124A49	RESISTOR	1K-5-1/4
U 001	1	51-05292H02	INTEGRATED CIRCUIT	
U 002	1	51-80345A01	INTEGRATED CIRCUIT	CA3140E SCREENED
U 004	1	51-80343B29	INTEGRATED CIRCUIT	SM83-2653
U 005	1	51-80343B28	INTEGRATED CIRCUIT	SM83-2654
U 006	1	51-83629M71	INTEGRATED CIRCUIT	
U 007	1	51-80345A02	INTEGRATED CIRCUIT	CA3160E SCREENED
U 008	1	51-80345A04	INTEGRATED CIRCUIT	CA3240E SCREENED
U 009	1	51-80345A05	INTEGRATED CIRCUIT	HI-201-5 SCREENED
U 010	1	51-80346A05	MIXER	
VR002	1	48-83461E03	DIODE,ZENER	3.3V-5-.5
VR003	1	48-83461E03	DIODE,ZENER	3.3V-5-.5
W 001	1	30-80344B16	CABLE ASSEMBLY	30-P22372E001

RF INPUT MODULE

DUPLEX GENERATOR BOARD (A17A3)

(RTL-4157A)

Figure 17-10. Block Diagram

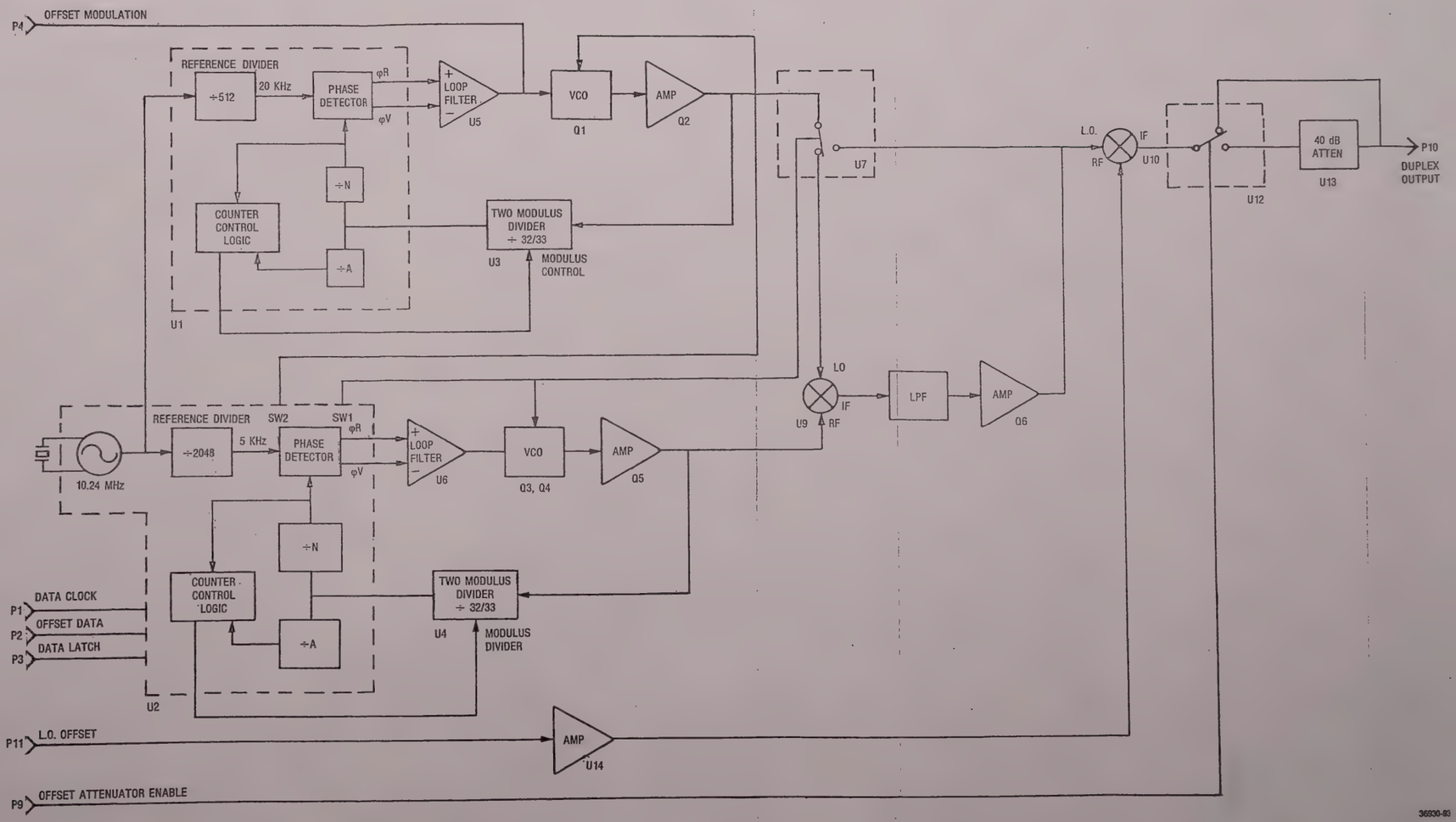

Figure 17-11. Schematic

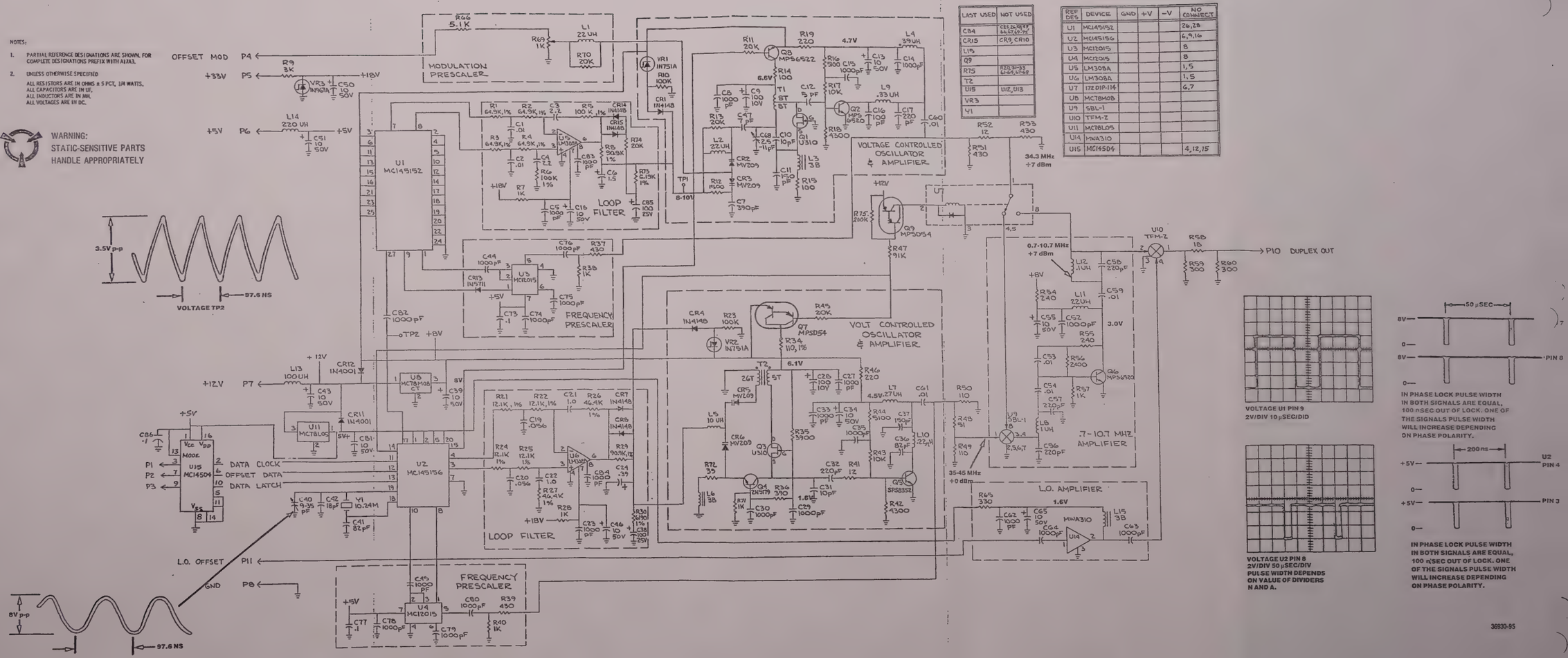

LAST USED	NOT USED
C84	C83,24,85,86,87,88
CR15	CR9, CR10
L15	
Q9	
R75	R70,71-73, 63-69, 87-89
T2	
U15	U12, U13
VR3	
V1	

REF DES	DEVICE	GND	+V	-V	NO CONNECT
U1	MC145152				26,28
U2	MC145156				6,9,16
U3	MC12015				8
U4	MC12015				8
U5	LM308A				1,5
U6	LM308A				1,5
U7	172 DIP-114				6,7
U8	MC78M08				
U9	SBL-1				
U10	TFM-Z				
U11	MC78L05				
U14	MWA310				
U15	MC14504				4,12,15

VOLTAGE U1 PIN 9
2V/DIV 10 μSEC/DID

VOLTAGE U2 PIN 8
2V/DIV 50 μSEC/DIV
PULSE WIDTH DEPENDS ON VALUE OF DIVIDERS N AND A.

IN PHASE LOCK PULSE WIDTH IN BOTH SIGNALS ARE EQUAL, 100 nSEC OUT OF LOCK. ONE OF THE SIGNALS PULSE WIDTH WILL INCREASE DEPENDING ON PHASE POLARITY.

IN PHASE LOCK PULSE WIDTH IN BOTH SIGNALS ARE EQUAL, 100 nSEC OUT OF LOCK. ONE OF THE SIGNALS PULSE WIDTH WILL INCREASE DEPENDING ON PHASE POLARITY.

36930-95

17-20

Figure 17-12. Printed Wiring Board Assembly and Parts List

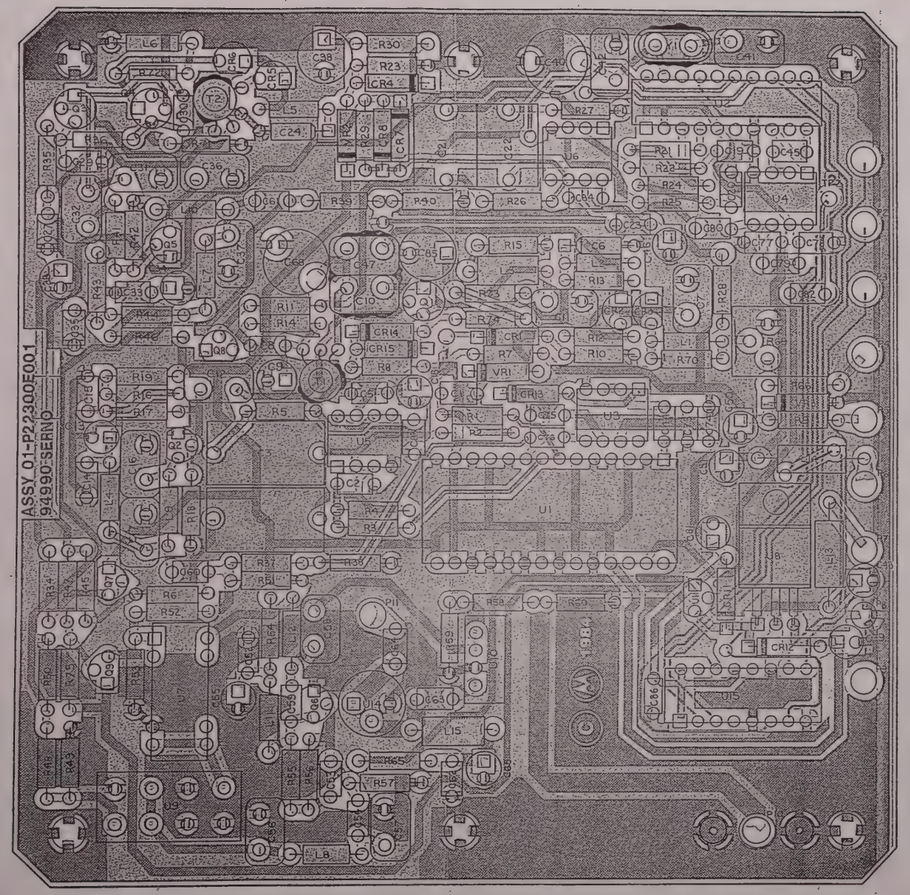

COMPONENTS AND COMPONENT SIDE TRACK SHOWN IN BLACK. SOLDER-SIDE TRACK SHOWN IN ORANGE.

DUPLEX GENERATOR BOARD (A17A3)
RTL-4157A

Find No.	Qty. Req.	Part No.	Nomenclature	Part Value
C 001	1	21-80341B94	CAPACITOR	.01UF-10-100
C 002	1	21-80341B94	CAPACITOR	.01UF-10-100
C 003	1	08-80343B16	CAPACITOR	2.2UF-5-100
C 004	1	08-80343B16	CAPACITOR	2.2UF-5-100
C 005	1	21-80341B93	CAPACITOR	1000PF-20-100
C 006	1	23-80344B36	CAPACITOR	1.5UF-10-35
C 007	1	21-80339B21	CAPACITOR	390PF-5-100
C 008	1	21-80341B93	CAPACITOR	1000PF-20-100
C 009	1	23-80341B07	CAPACITOR	100UF-20-10
C 010	1	21-00849811	CAPACITOR	10PF-N470
C 011	1	21-80369A94	CAPACITOR	150PF-5-500
C 012	1	21-80369A85	CAPACITOR	5PF-.5PF-500
C 013	1	23-80341B15	CAPACITOR	10UF-20-50
C 014	1	21-80341B93	CAPACITOR	1000PF-20-100
C 015	1	21-80341B93	CAPACITOR	1000PF-20-100
C 016	1	21-00850118	CAPACITOR	100PF-5-500
C 017	1	21-80339B26	CAPACITOR	220PF-5-500
C 018	1	23-80341B15	CAPACITOR	10UF-20-50
C 019	1	21-80342B07	CAPACITOR	.056UF-10-100
C 020	1	21-80342B07	CAPACITOR	.056UF-10-100
C 021	1	08-80343B13	CAPACITOR	1.0UF-10-100
C 022	1	08-80343B13	CAPACITOR	1.0UF-10-100
C 023	1	21-80341B93	CAPACITOR	1000PF-20-100
C 024	1	23-80340B99	CAPACITOR	.39UF-10-35
C 027	1	21-80341B93	CAPACITOR	1000PF-20-100
C 028	1	23-80341B07	CAPACITOR	100UF-20-10
C 029	1	21-80341B93	CAPACITOR	1000PF-20-100
C 030	1	21-80341B93	CAPACITOR	1000PF-20-100
C 031	1	21-00859934	CAPACITOR	10PF-.5PF-500
C 032	1	21-80339B26	CAPACITOR	220PF-5-500
C 033	1	21-80341B93	CAPACITOR	1000PF-20-100
C 034	1	23-80341B15	CAPACITOR	10UF-20-50
C 035	1	21-80341B93	CAPACITOR	1000PF-20-100
C 036	1	21-80339B18	CAPACITOR	82PF-5-500
C 037	1	21-80369A94	CAPACITOR	150PF-5-500
C 038	1	23-84665F03	CAPACITOR	100UF-20-25
C 039	1	23-80341B15	CAPACITOR	10UF-20-50
C 040	1	20-80396A57	CAPACITOR	9 TO 35PF-200
C 041	1	21-80339B18	CAPACITOR	82PF-5-500
C 042	1	21-80339B13	CAPACITOR	18PF-5-500
C 043	1	23-80341B15	CAPACITOR	10UF-20-50
C 044	1	21-80341B93	CAPACITOR	1000PF-20-100
C 045	1	21-80341B93	CAPACITOR	1000PF-20-100
C 046	1	23-80341B15	CAPACITOR	10UF-20-50
C 047	1	21-80339B11	CAPACITOR	7PF-.5PF-500
C 050	1	23-80341B15	CAPACITOR	10UF-20-50
C 051	1	23-80341B15	CAPACITOR	10UF-20-50
C 052	1	21-80341B93	CAPACITOR	1000PF-20-100
C 053	1	21-80342B09	CAPACITOR	.01UF-20-50
C 054	1	21-80342B09	CAPACITOR	.01UF-20-50
C 055	1	23-80341B15	CAPACITOR	10UF-20-50
C 056	1	21-80339B26	CAPACITOR	220PF-5-500
C 057	1	21-80339B26	CAPACITOR	220PF-5-500
C 058	1	21-80339B26	CAPACITOR	220PF-5-500
C 059	1	21-80342B09	CAPACITOR	.01UF-20-50
C 060	1	21-80342B09	CAPACITOR	.01UF-20-50
C 061	1	21-80342B09	CAPACITOR	.01UF-20-50
C 062	1	21-80341B93	CAPACITOR	1000PF-20-100
C 063	1	21-80341B93	CAPACITOR	1000PF-20-100
C 064	1	21-80341B93	CAPACITOR	1000PF-20-100
C 065	1	23-80341B15	CAPACITOR	10UF-20-50
C 066	1	23-80341B15	CAPACITOR	10UF-20-50
C 067	1	21-80339B72	CAPACITOR	.001UF-10-200
C 068	1	20-80343B36	CAPACITOR, VARIABLE	2.5 TO 11PF
C 073	1	21-80342B10	CAPACITOR	.1UF-20-50
C 074	1	21-80341B93	CAPACITOR	1000PF-20-100
C 075	1	21-80341B93	CAPACITOR	1000PF-20-100
C 076	1	21-80341B93	CAPACITOR	1000PF-20-100
C 077	1	21-80342B10	CAPACITOR	.1UF-20-50
C 078	1	21-80341B93	CAPACITOR	1000PF-20-100
C 079	1	21-80341B93	CAPACITOR	1000PF-20-100
C 080	1	21-80341B93	CAPACITOR	1000PF-20-100
C 081	1	23-80341B15	CAPACITOR	10UF-20-50
C 082	1	21-80341B93	CAPACITOR	1000PF-20-100
C 083	1	21-80341B93	CAPACITOR	1000PF-20-100
C 084	1	21-80341B93	CAPACITOR	1000PF-20-100
C 085	1	23-84665F03	CAPACITOR	100UF-20-25
C 086	1	21-80342B10	CAPACITOR	.1UF-20-50
CR001	1	48-84463K02	DIODE	
CR002	1	48-80340B60	VARACTOR	
CR003	1	48-80340B60	VARACTOR	
CR004	1	48-84463K02	DIODE	
CR005	1	48-80340B60	VARACTOR	

DUPLEX GENERATOR BOARD (A17A3) (Cont)

RTL-4157A

Find No.	Qty. Req.	Part No.	Nomenclature	Part Value
CR006	1	48-80340B60	VARACTOR	
CR007	1	48-84463K02	DIODE	
CR008	1	48-84463K02	DIODE	
CR009	1	48-80339B87	DIODE	
CR010	1	48-84463K02	DIODE	
CR011	1	48-82466H13	DIODE	
CR012	1	48-82466H13	DIODE	
CR013	1	48-87643C01	DIODE	
CR014	1	48-84463K02	DIODE	
CR015	1	48-84463K02	DIODE	
L 001	1	24-80369A31	COIL	22UH
L 002	1	24-80369A31	COIL	22UH
L 003	1	24-83961B01	CHOKE	
L 004	1	24-80340B52	COIL	.39UH
L 005	1	24-80369A29	COIL	10UH
L 006	1	24-83961B01	CHOKE	
L 007	1	24-80340B51	COIL	.27UH
L 008	1	24-80369A22	COIL	1UH
L 009	1	24-80369A26	COIL	.33UH
L 010	1	24-80369A25	COIL	.22UH
L 011	1	24-80369A31	COIL	22UH
L 012	1	24-80369A19	COIL	.1UH
L 013	1	24-80369A37	COIL	100UH
L 014	1	24-80369A38	COIL	220UH
L 015	1	24-83961B01	CHOKE	
P 001	1	09-80344B25	RECEPTACLE	
P 002	1	09-80344B25	RECEPTACLE	
P 003	1	09-80344B25	RECEPTACLE	
P 004	1	09-80344B25	RECEPTACLE	
P 005	1	09-80344B25	RECEPTACLE	
P 006	1	09-80344B25	RECEPTACLE	
P 007	1	09-80344B25	RECEPTACLE	
P 008	1	09-80344B25	RECEPTACLE	
P 009	1	09-80344B25	RECEPTACLE	
P 010	1	09-80344B25	RECEPTACLE	
P 011	1	09-80344B25	RECEPTACLE	
Q 001	1	48-00869933	TRANSISTOR	J-FET
Q 002	1	48-80340B86	TRANSISTOR	MPS6520
Q 003	1	48-00869933	TRANSISTOR	J-FET
Q 004	1	48-00869776	TRANSISTOR	
Q 005	1	48-80340B86	TRANSISTOR	MPS6520
Q 006	1	48-80340B86	TRANSISTOR	MPS6520
Q 007	1	48-80372B78	TRANSISTOR	
Q 008	1	48-80340B47	TRANSISTOR	
Q 009	1	48-00869849	TRANSISTOR	
Q 010	1	48-80340B45	TRANSISTOR	
Q 011	1	48-80340B86	TRANSISTOR	MPS6520
R 001	1	06-10621D70	RESISTOR	64.9K-1-1/4
R 002	1	06-10621D70	RESISTOR	64.9K-1-1/4
R 003	1	06-10621D70	RESISTOR	64.9K-1-1/4
R 004	1	06-10621D70	RESISTOR	64.9K-1-1/4
R 005	1	06-10621D88	RESISTOR	100K-1-1/4
R 006	1	06-10621D88	RESISTOR	100K-1-1/4
R 007	1	06-11009C49	RESISTOR	1K-5-1/4
R 008	1	06-10621D84	RESISTOR	90.9K-1-1/4
R 009	1	06-11009C60	RESISTOR	3K-5-1/4
R 010	1	06-11009C97	RESISTOR	100K-5-1/4
R 011	1	06-11009C80	RESISTOR	20K-5-1/4
R 012	1	06-11009C53	RESISTOR	1.5K-5-1/4
R 013	1	06-11009C80	RESISTOR	20K-5-1/4
R 014	1	06-11009C25	RESISTOR	100-5-1/4
R 015	1	06-11009C25	RESISTOR	100-5-1/4
R 016	1	06-11009C66	RESISTOR	5.1K-5-1/4
R 017	1	06-11009C73	RESISTOR	10K-5-1/4
R 018	1	06-11009C64	RESISTOR	4.3K-5-1/4
R 019	1	06-11009C33	RESISTOR	220-5-1/4
R 021	1	06-10621C99	RESISTOR	12.1K-1-1/4
R 022	1	06-10621C99	RESISTOR	12.1K-1-1/4
R 023	1	06-11009C97	RESISTOR	100K-5-1/4
R 024	1	06-10621C99	RESISTOR	12.1K-1-1/4
R 025	1	06-10621C99	RESISTOR	12.1K-1-1/4
R 026	1	06-10621D56	RESISTOR	46.4K-1-1/4
R 027	1	06-10621D56	RESISTOR	46.4K-1-1/4
R 028	1	06-11009C49	RESISTOR	1K-5-1/4
R 029	1	06-10621D84	RESISTOR	90.9K-1-1/4
R 030	1	06-10621C71	RESISTOR	6.19K-1-1/4
R 034	1	06-00124A98	RESISTOR	110K-1-1/4
R 035	1	06-11009C63	RESISTOR	3.9K-5-1/4
R 036	1	06-11009C39	RESISTORS	390-5-1/4
R 037	1	06-11009C40	RESISTOR	430-5-1/4
R 038	1	06-11009C49	RESISTOR	1K-5-1/4
R 039	1	06-11009C40	RESISTOR	430-5-1/4
R 040	1	06-11009C49	RESISTOR	1K-5-1/4
R 041	1	06-11009C03	RESISTOR	12-5-1/4
R 042	1	06-11009C64	RESISTOR	4.3K-5-1/4
R 043	1	06-11009C73	RESISTOR	10K-5-1/4
R 044	1	06-11009C66	RESISTOR	5.1K-5-1/4
R 045	1	06-11009C80	RESISTOR	20K-5-1/4
R 046	1	06-11009C33	RESISTOR	220-5-1/4
R 047	1	06-11009C96	RESISTOR	91K-5-1/4
R 048	1	06-11009C18	RESISTOR	51-5-1/4
R 049	1	06-11009C26	RESISTOR	110-5-1/4
R 050	1	06-11009C26	RESISTOR	110-5-1/4
R 051	1	06-11009C40	RESISTOR	430-5-1/4
R 052	1	06-11009C03	RESISTOR	12-5-1/4
R 053	1	06-11009C40	RESISTOR	430-5-1/4
R 054	1	06-11009C34	RESISTOR	240-5-1/4
R 055	1	06-11009C34	RESISTOR	240-5-1/4
R 056	1	06-11009C58	RESISTOR	2.4K-5-1/4
R 057	1	06-11009C49	RESISTOR	1K-5-1/4
R 058	1	06-11009C07	RESISTOR	18-5-1/4
R 059	1	06-11009C36	RESISTOR	300-5-1/4
R 060	1	06-11009C36	RESISTOR	300-5-1/4
R 061	1	06-11009C91	RESISTOR	56K-5-1/4
R 062	1	06-11009C95	RESISTOR	82K-5-1/4
R 063	1	06-00124A11	RESISTOR	2K-5-1/4
R 064	1	06-11009C56	RESISTOR	2K-5-1/4
R 065	1	06-11009C37	RESISTOR	330-5-1/4
R 066	1	06-11009C66	RESISTOR	5.1K-5-1/4
R 069	1	18-83452F10	RESISTOR, VARIABLE	1K
R 070	1	06-11009C80	RESISTOR	20K-5-1/4
R 071	1	06-11009C49	RESISTOR	1K-5-1/4
R 072	1	06-11009C15	RESISTOR	39-5-1/4
R 073	1	06-10621C71	RESISTOR	6.19K-1-1/4
R 074	1	06-11009C80	RESISTOR	20K-5-1/4
R 075	1	06-00124B05	RESISTOR	200K-5-1/4
T 001	1	25-80342B74	TRANSFORMER	
T 002	1	25-80342B82	TRANSFORMER	
U 001	1	51-80340B19	INTEGRATED CIRCUIT	
U 002	1	51-83625M62	INTEGRATED CIRCUIT	
U 003	1	51-80340B16	INTEGRATED CIRCUIT	
U 004	1	51-80340B16	INTEGRATED CIRCUIT	
U 005	1	51-80365A27	INTEGRATED CIRCUIT	
U 006	1	51-80365A27	INTEGRATED CIRCUIT	
U 007	1	80-80341B25	RELAY	
U 008	1	51-05292H02	INTEGRATED CIRCUIT	
U 009	1	01-80340B75	MIXER	
U 010	1	51-80346A05	MIXER	DOUBLE BALANCED
U 011	1	51-05469E01	INTEGRATED CIRCUIT	
U 012	1	80-80339B85	RELAY	
U 013	1	01-80339B01	ATTNEUATOR	40DB
U 014	1	51-80340B63	INTEGRATED CIRCUIT	
U 015	1	51-80372B85	BUFFER	
VR001	1	48-82256C51	DIODE, ZENER	5.1V-5-.5
VR002	1	48-82256C51	DIODE, ZENER	5.1V-5-.5
VR003	1	48-83461E18	DIODE, ZENER	18V-10-.5
Y 001	1	48-80343B32	CRYSTAL	10.24 MHZ

SECTION 18.
FRONT PANEL ASSEMBLY (A18)

18.1 DESCRIPTION

The Front Panel assembly (A18) contains controls, switches, and LEDs which control the System Analyzer. It also contains miscellaneous input and output ports. Most of the control devices are mounted directly to the Front Panel; however, some of them are mounted on the Display board (A18A1). Front Panel circuitry is connected to the rest of the system by two flexible printed wiring boards — the Front Panel Left Flex, which connects the Display board to the System Motherboard (A19), and the Right Flex, which connects the Scope controls to the Motherboard (A19). A ribbon cable assembly also connects the Display board to the Front-Panel Interface board (A15).

A schematic of the Front Panel assembly is shown at the end of this section in Figure 18-1. This is followed by Figure 18-2a-f, which coordinates the Front Panel parts list with three views of the Front Panel, with the printed wiring board assemblies of the Left and Right Flexes, and with the Switch Interconnect board.

A schematic of the Display board follows these figures in Figure 18-3, with the printed wiring board assembly and parts list in Figure 18-4.

18.2 CONTROLS, SWITCHES AND LEDs

Table 18-1 describes each control device on the Front Panel, including those on the Display board (A18A1). (See Figure 18-2a at the end of the section for exact positions of these controls.)

The step-attenuator control knob (Step), the Antenna port, the RF In/Out port, the Duplex Generator Output port, and the Duplex Generator On/Off switch are part of the RF Input module (A17). For information on these ports and switches, refer to Section 17 on the A17 module.

Table 18-1. Controls, Switches and LEDs on the Front Panel

Control, Switch, or LED	Function
Main Switches	
POWER (S3)	In the On position, the system is powered up. In the Standby and DC Off positions during ac operation, and in the Standby position during dc operation, all modules are powered down except the Frequency-Standard Interface board (A16). In the DC Off position during dc operation, all modules are powered down.
FUNCTION (S2)	Determines whether the system is in Generate or Monitor mode.
MODULATION (S1)	Determines whether the modulation generator output is continuously on (Cont), Off, or Burst.
RF SECTION Controls	
RF Level (R12 and R26)	Regulates the RF output power by controlling the reference voltage applied to the ALC loop on the Wideband Amplifier board (A17A2).
RF Port Sel	Controls which port (Antenna or RF In/Out) is enabled. Pulled out enables Antenna port. Pushed in enables RF In/Out port.
Ports: Antenna, RF In/Out, and Ext Wattmeter	See Section 17 on the RF Input module (A17).
OSCILLOSCOPE Controls	
Vert (S12 and R11)	
S12	Selects from 4 values of vertical-input sensitivity: 0.01V, 0.1V, 1V, and 10V/Div. When one of the 0.01V to 10V/Div RNG SEL outputs is low, the corresponding vertical-input sensitivity has been selected. These outputs are interfaced to the Processor board by circuitry on the Front-Panel Interface board.
R11	Provides a continuously variable but uncalibrated vertical-input sensitivity. When turned fully clockwise, calibrates the vertical-input sensitivity.

Table 18-1. Controls, Switches and LEDs on the Front Panel (Cont)

Control, Switch, or LED	Function
OSCILLOSCOPE Controls	
Trig Level/Position (S11 and R10)	
S11	Selects automatic or normal triggering. In automatic mode, the AUTO/NOR TRIG SEL output, which goes to the Scope Amplifier board (A2), is −5V. In this mode, the scope sweep free-runs when there is no triggering. In normal mode, the AUTO/NOR TRIG SEL output is pulled to +5V by a pull-up resistor on A2, and the scope sweep is blanked in the absence of triggering.
R10	Adjusts the reference (Trig Level) to which the input signal is compared for scope triggering. The triggering circuit is on the Scope/DVM Control board (A7).
Horiz (S10, R9, R8)	
S10	Selects one of six horizontal-sweep speeds or external horizontal input. When one of the SWP SEL or EXT HORIZ SEL outputs is high, the corresponding horizontal mode has been selected. These outputs are interfaced to processor control by circuitry on the Front-Panel Interface board.
R9	Provides a continuously variable dc voltage at the SWP VERNIER VOLT output, which goes to the Scope Amplifier board, and thus provides a continuously variable horizontal-sweep speed. When R9 is fully clockwise, the horizontal-sweep speed is calibrated.
R8	In external horizontal mode, adjusts the horizontal-input sensitivity over a range of 0.1V/Div to 10V/Div.
Vert (R14) and Horiz (R15)	
R14	Adjusts the scope's vertical position by adjusting the offset in the vertical pre-amplifier on the Front-Panel Interface board.
R15	Adjusts the scope's horizontal position by adjusting the offset in the horizontal amplifier on the Scope Amplifier board.
Port: Vert/Sinad/Dist/DVM/Counter In – Multipurpose Input	Most of the basic measurement functions of the System Analyzer can be performed on signals connected to this port. The particular measurement being performed is indicated by the display LEDs.
Port: Ext Horiz (External Horizontal Input)	Controls the scope's horizontal sweep in external-horizontal mode. R8 controls input sensitivity of 0.1V/Div to 10V/Div.
MONITOR Controls	
Squelch (R7)	Controls the dc voltage at the SQUELCH LEVEL output (which goes to the Receiver), and thus controls the RF level below which the Receiver is squelched.
Volume (R6)	Controls the volume of the speaker output.
Image/Dplx (S17) – Image/Duplex Switch	Selects high-side or low-side mixing during normal monitor operation, and selects high-side or low-side offset during Duplex operation. During high-side mix or high-side offset, S17 is open and the IMAGE HI/LO signal is pulled up to +5V by a resistor on the Front-Panel Interface board. During low-side mix or low-side offset, S17 is closed and the IMAGE HI/LO signal is pulled low. The IMAGE HI/LO output is interfaced to processor control by circuitry on the Front-Panel Interface board.
BW (S16) – Bandwidth Switch	Controls the generator's FM sensitivity, the Receiver's demodulation sensitivity, and audio filters in the Receiver. In wideband mode, S16 is open, and the WB/NB output is pulled up to +5V by a resistor on the Front-Panel Interface board. In narrowband mode, S16 is closed, and the WB/NB output is pulled low. The WB/NB output is interfaced to processor control by circuitry on the Front-Panel Interface board.
BFO (R18)	Controls the dc voltage at the BFO FREQ CNTL output, and thus controls the frequency of the varactor-tuned BFO on the Receiver board.
Port: Demod Out	In monitor mode, the Receiver's demodulation output comes out of this port. In FM, the output level is 1 volt-peak per kHz of peak deviation in narrowband, and 1 volt-peak per 10 kHz of peak deviation in wideband. In AM, the output level is a nominal 1 volt-peak per 10 percent AM.

Table 18-1. Controls, Switches and LEDs on the Front Panel (Cont)

Control, Switch, or LED	Function
MODULATION Controls	
Code Synth Lvl (R5), Ext Level (R4), 1 KHz Level (R13)	Adjust the amplitude of the signals that modulate the RF signal generator.
Switch S15	Turns the 1 KHz signal on and off.
Port: Mod Out	Connects to the modulation generator's output. In generate mode, this port is the modulation source for the signal generator.
Port: Ext Mod In	Allows external signals to be summed into the output of the modulation generator. The sensitivity of this output to the EXT MOD input is adjusted with the Ext Level control.
Port: Mic (Microphone Input)	Allows voice information to be incorporated into the internal modulation. Its level is set by the Ext Level control.
Miscellaneous Controls	
Intensity (R2) and Focus (R3)	Control the intensity and focus of the CRT by controlling the dc level on the INTENSITY LEVEL and FOCUS LEVEL signals going to the Scope Amplifier board (A2).
Dispr/Sweep (R1)	Controls the amplitude of the SYNTH SWEEP signal going to the RF Synthesizer and thus controls the dispersion of the spectrum-analyzer sweep or the frequency range of the sweep generator's output.
RF Scan	Scans the RF Synthesizer frequency up or down. When the optical encoder is rotated clockwise, the OPTICAL ENC B signal leads the OPTICAL ENC A signal by 90°. When the optical encoder is rotated counter clockwise, OPTICAL ENC A leads OPTICAL ENC B by 90°. The OPTICAL ENC A and B signals go to circuitry on the A15 board, which interfaces these signals with the Processor board.
DISPLAY BOARD (A18A1) Controls	
Keypad Switches (S1-S4)	
S1	Contains 12 switches which control the cursor and allow entry of numeric data.
S2, S3, S4	Control system display, function, and modulation, respectively. The particular display, function, and modulation modes are indicated by LEDs DS1-DS24. Pressing any of these switches connects a unique combination of row and column lines. A PIA on the Processor board detects this, and the processor takes the appropriate action.
Display, Function and Modulation LEDs (DS1-DS24)	Indicate display, function, and modulation status. Control output to these LEDs is accomplished via AF BUS addresses 0, 1, and 2 on the Front-Panel Interface board. Latch-selects LS0, LS1, and LS2 are pulsed low to latch the data on the AF DATA BUS into latches on U6, U7, and U8, respectively, when the corresponding address is enabled on the AF ADD BUS. This data is decoded (as shown in Table 18-2) by U6, U7, and U8, and the appropriate LEDs are lit by drivers U1-U4. For more information on the AF BUS, refer to Section 15 on the Front-Panel Interface board.
Batt and AC LEDs (DS25, DS26)	Indicate application of dc and ac power, respectively.
Oven-Ready LED	Indicates when the oven has reached operating temperature on System Analyzers that have the ovenized frequency standard.

18.3 DECODING FOR DISPLAY, FUNCTION AND MODULATION LEDs

Table 18-2 shows which LED is selected for each state of the AF DATA BUS when the appropriate latch-select (LS0, LS1, or LS2) is strobed low.

Table 18-2. Decoding for Display, Function, and Modulation LEDs

Configuration of AF DATA BUSSES				Display LED Selected (LS0 strobed low)	Function LED Selected (LS1 strobed low)	Modulation LED Selected (LS2 strobed low)
0	1	2	3			
0	0	0	0	Gen/Mon Mtr	FM	PL/DPL
0	0	0	1	Modulation	CW	PL/DPL INV
0	0	1	0	Spect Analyzer	AM	Tone A
0	0	1	1	Duplex Gen	SSB/DSBSC	Tone B
0	1	0	0	RF Memory	SWP 1-10 MHz	Tone Seq.
0	1	0	1	Signaling Seq	SWP 0.01-1 MHz	Tone Remote
0	1	1	0	Freq Counter	Not Allowed	Not Allowed
0	1	1	1	DVM/DIST	Not Allowed	Not Allowed
1	0	0	0	Ext Wattmeter	Not Allowed	Not Allowed
1	0	0	1	IF	Not Allowed	Not Allowed
1	0	1	0	Scope AC	Not Allowed	Not Allowed
1	0	1	1	Scope DC	Not Allowed	Not Allowed
1	1	0	0	Not Allowed	Not Allowed	Not Allowed
1	1	0	1	Not Allowed	Not Allowed	Not Allowed
1	1	1	0	Not Allowed	Not Allowed	Not Allowed
1	1	1	1	Not Allowed	Not Allowed	Not Allowed

NOTES:
1. PARTIAL REFERENCE DESIGNATIONS ARE SHOWN. FOR COMPLETE DESIGNATION PREFIX WITH 1A1A.
2. UNLESS OTHERWISE SPECIFIED: ALL RESISTORS ARE IN OHMS, ± 5PCT., 1/4 WATT. ALL VOLTAGES ARE DC.

WARNING:
STATIC-SENSITIVE PARTS
HANDLE APPROPRIATELY

REF DESIGNATIONS	
HIGHEST USED	NOT USED
D53	D51, D52
R25	R24, R25
S19	S4-S7, S13,
VR2	

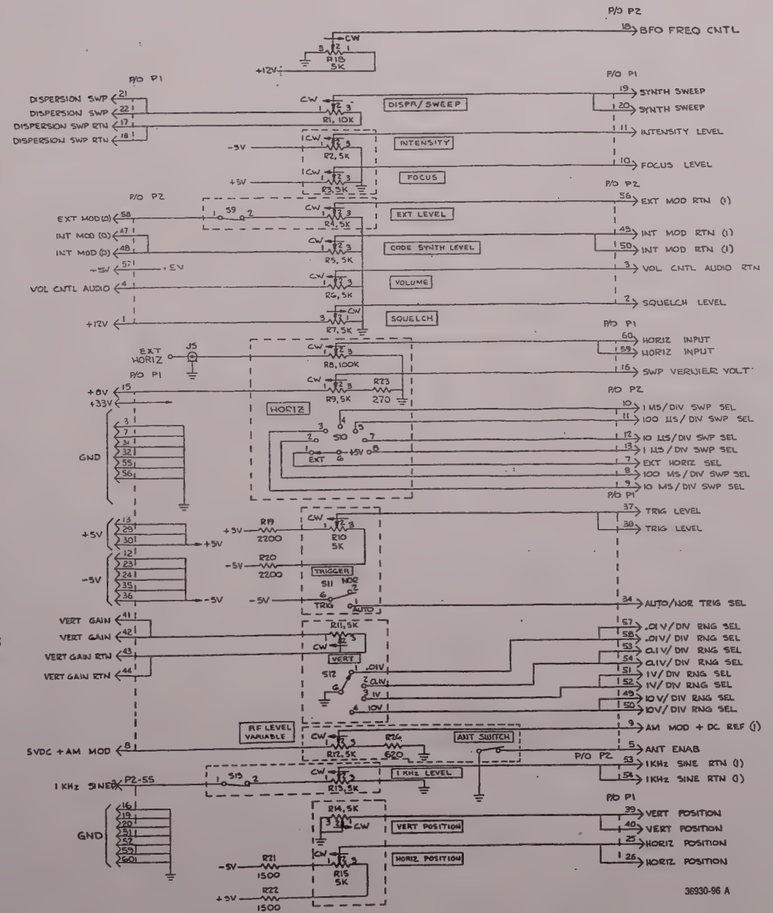

Figure 18-1a. Front Panel Assembly – Schematic (Sheet 1 of 2)

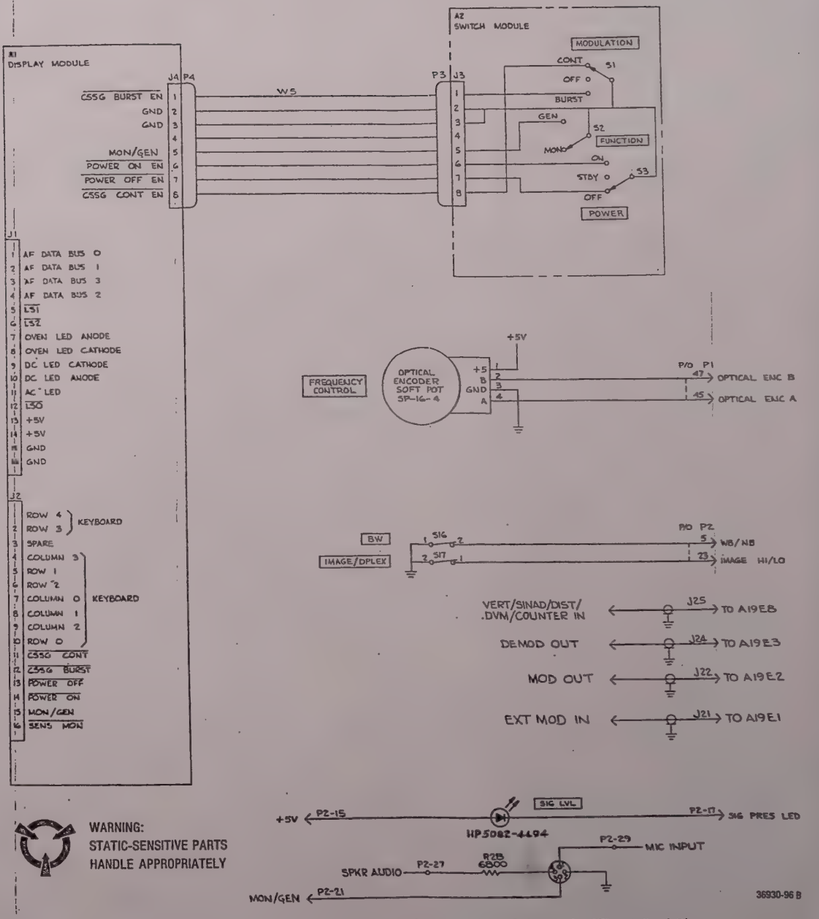

WARNING:
STATIC-SENSITIVE PARTS
HANDLE APPROPRIATELY

Figure 18-1b. Front Panel Assembly – Schematic (Sheet 2 of 2)

FRONT PANEL

Figure 18-2a. Photo and Parts List (Sheet 1 of 4)

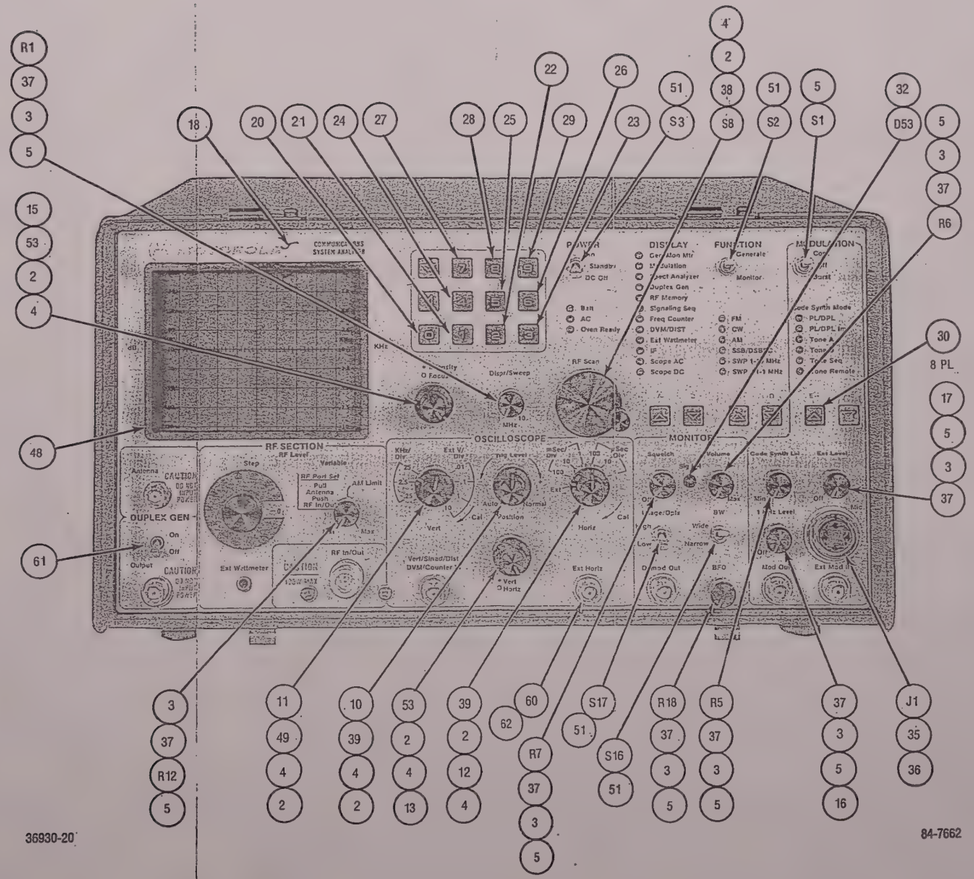

Figure 18-2a. Front Panel Photo (See Sheet 4, p. 18-9, for Parts List)

FRONT PANEL ASSEMBLY (A18)

Find No.	Qty. Req.	Part No.	Nomenclature	Part Value
002	6	02-80342B23	NUT, COMPONENT	3/8-32
003	8	02-80342B24	NUT, COMPONENT	1/4-32
004	6	04-7691	WASHER, LOCK	.375
005	8	04-115322	WASHER, LOCK	.250
006	6	04-114970	WASHER, FLAT	.125
007	6	04-9777	WASHER, LOCK	.112
008	6	03-139819	SCREW	3112-40X.500
010	1	40-80335A78	SWITCH, RESISTOR VARIABLE	SCOPE TRIG
011	1	40-80335A77	SWITCH, RESISTOR VARIABLE	SCOPE VERT.
012	1	40-80335A76	SWITCH/DUAL RESISTOR, VAR.	SCOPE HORIZ
013	1	18-80346A13	RESISTOR, VARIABLE	
015	1	18-80346A13	RESISTOR, VARIABLE	
016	1	18-80346A18	RESISTOR, VARIABLE/SWITCH	
017	1	18-80346A18	RESISTOR, VARIABLE/SWITCH	
018	1	64-80343B59	OVERLAY, FRONT PANEL	
020	1	38-80331A49	PUSHBUTTON, SWITCH-0	
021	1	38-80331A50	PUSHBUTTON, SWITCH-1	
022	1	38-80331A51	PUSHBUTTON, SWITCH-2	
023	1	38-80331A52	PUSHBUTTON, SWITCH-3	
024	1	38-80331A53	PUSHBUTTON, SWITCH-4	
025	1	38-80331A54	PUSHBUTTON, SWITCH-5	
026	1	38-80331A55	PUSHBUTTON, SWITCH-6	
027	1	38-80331A56	PUSHBUTTON, SWITCH-7	
028	1	38-80331A57	PUSHBUTTON, SWITCH-8	
029	1	38-80331A58	PUSHBUTTON, SWITCH-9	
030	8	38-80331A48	PUSHBUTTON, SWITCH, DELTA	
031	2	09-80340B40	CONNECTOR	60 PIN W/O EARS
032	1	15-80341B26	HOLDER	
035	1	02-48207	NUT, COMP	
036	1	04-00007699	WASHER, COMP	
037	8	36-80343B03	KNOB	1/8 SHAFT
038	1	36-80343B04	KNOB	1/4 SHAFT
039	2	36-80343B01	KNOB, DUAL	1/8-1/4 SHAFT
047	1	75-80335A50	ISOLATOR, FRONT CRT	
048	1	13-80331A99	BEZEL	
049	1	36-80342B99	KNOB, DUAL	1/8-1/4 SHAFT
051	5	04-3997	WASHER, FLAT	.250
052	1	30-80343B91	CABLE ASSEMBLY, RIBBON	
053	2	36-80343B02	KNOB, DUAL	.156-.238 SHAFT
054	1	09-80331A95	SOCKET, SOLDER DIP	8 PIN
055	2	30-80343B90	CABLE ASSEMBLY, RIBBON	
057	2	55-80335A89	HINGE	
058	2	55-00947016	STRIKE, CATCH	
059	8	03-80341B37	SCREW, PH ASSEMBLED WASHER	6-32X.312
060	1	30-80343B96	CABLE ASSEMBLY	A18J5/FLEX
061	2	03-138651	SCREW	2-56X.125
062	1	04-2535	WASHER, LOCK	.500
063	1	14-15140A08	INSULATOR	
A 001	1	RTC-4043A	DISPLAY BOARD ASSY, A18A1	
DS003	1	48-84404B03	LED	
J 001	1	09-00830418	CONNECTOR, MIC	
R 001	1	18-80346A15	RESISTOR, VAR, DISPR/SWP	10K-10-1/4
R 005	1	18-80346A16	RESISTOR, VAR, INT, MOD, LVL	5K
R 006	1	18-80346A14	RESISTOR, VARIABLE	5K
R 007	1	18-80346A14	RESISTOR, VARIABLE	5K
R 012	1	18-80342B31	RESISTOR, VARIABLE	5K WITH SWITCH
R 018	1	18-80346A14	RESISTOR, VAR	5K
R 019	1	06-11009C57	RESISTOR	2.2K-5-1/4
R 020	1	06-11009C57	RESISTOR	2.2K-5-1/4
R 021	1	06-11009C53	RESISTOR	1.5K-5-1/4
R 022	1	06-11009C53	RESISTOR	1.5K-5-1/4
R 023	1	06-11009C35	RESISTOR	270-5-1/4
R 026	1	06-11009C44	RESISTOR	620-5-1/4
R 028	1	06-11045A69	RESISTOR	6.8K-5-1/2
S 001	1	40-80335A82	SWITCH, TOGGLE	
S 002	1	40-80335A80	SWITCH, TOGGLE	
S 003	1	40-80335A81	SWITCH, TOGGLE	
S 008	1	18-80340B84	SOFTPOT, RF SCAN	
S 016	1	40-80335A80	SWITCH, TOGGLE	SPST, WB/NB
S 017	1	40-80335A80	SWITCH, TOGGLE	SPST, IMAGE

Cable Assembly (A18J5/FLEX)
30-80343B96

002	1	28-80342B90	CONNECTOR, BNC	

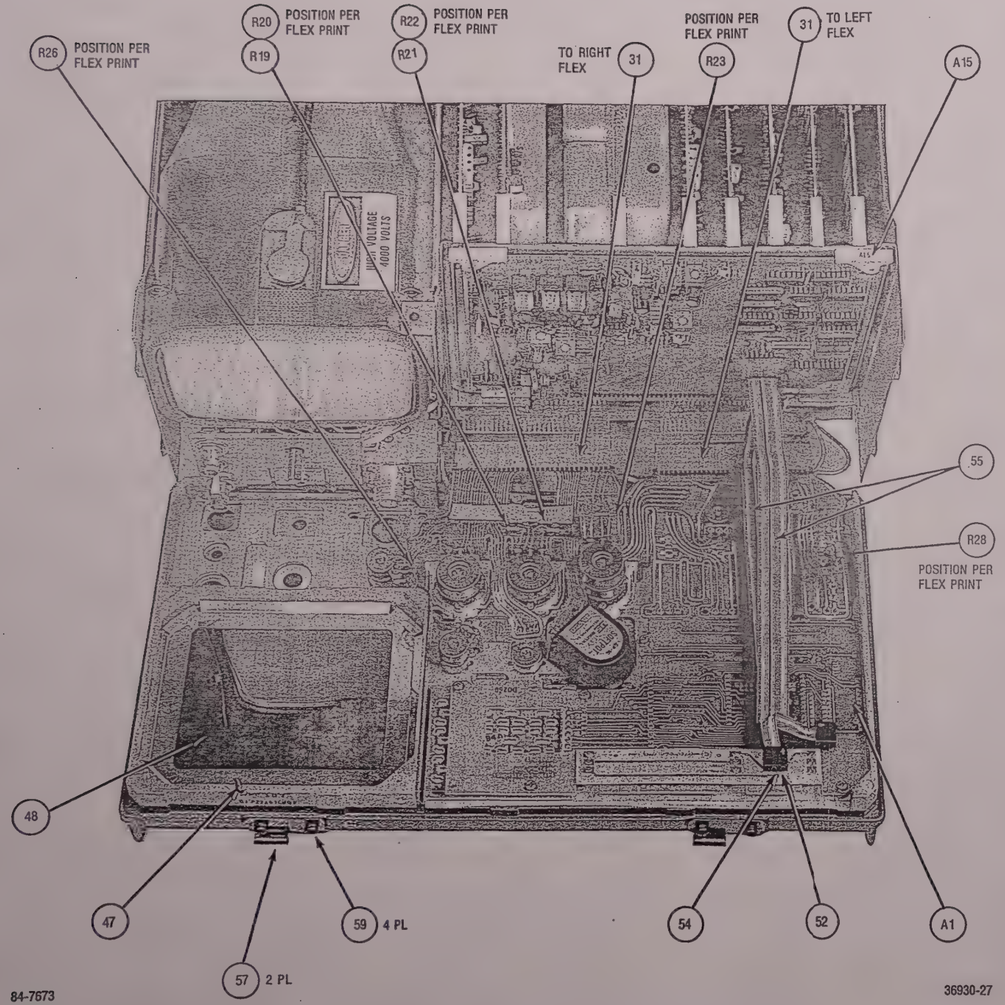

Figure 18-2b. Inside Front Panel – Photo (See Sheet 4, p. 18-9, for Parts List)

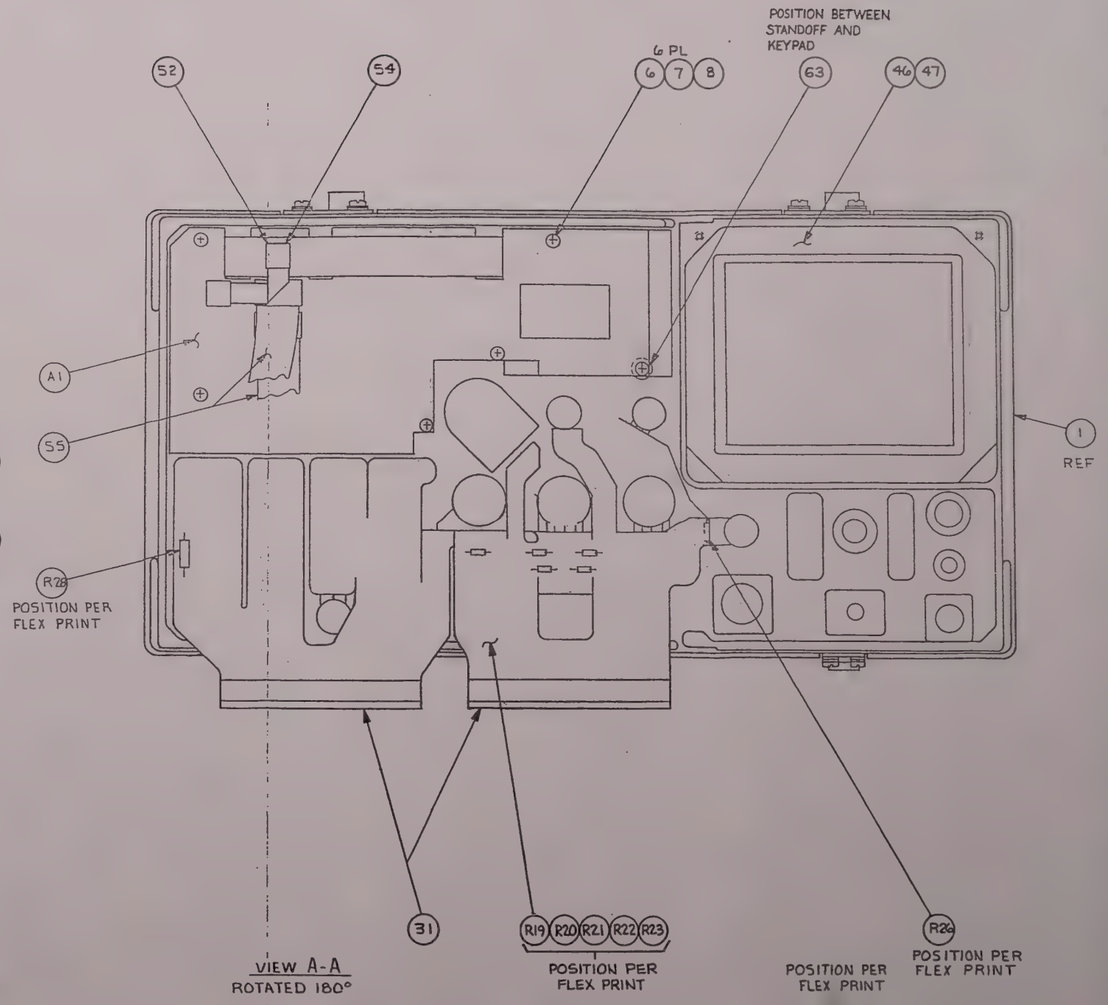

Figure 18-2c. Inside Front Panel – Drawing (See Sheet 4, p. 18-9, for Parts List)

Figure 18-2d. and 18-2e. Printed Wiring Board Assemblies and Parts List (Sheet 3 of 4)

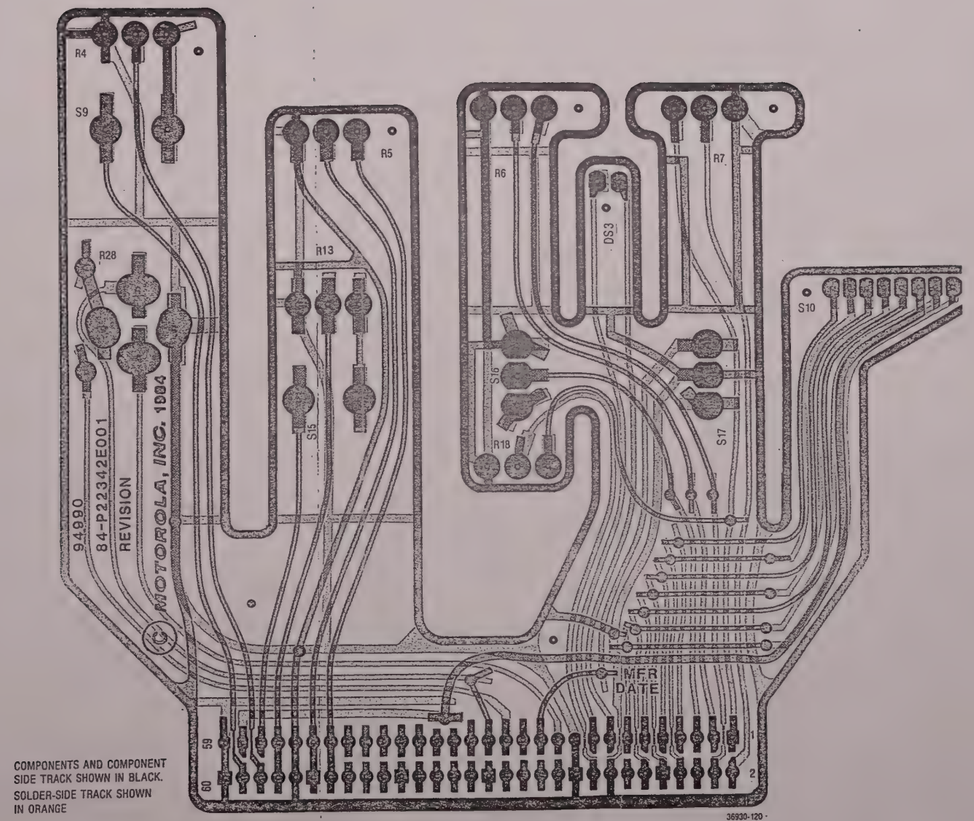

COMPONENTS AND COMPONENT SIDE TRACK SHOWN IN BLACK.
SOLDER-SIDE TRACK SHOWN IN ORANGE

Figure 18-2d. Front Panel Left Flex (Display) (See Sheet 4, p. 18-9, for Parts List)

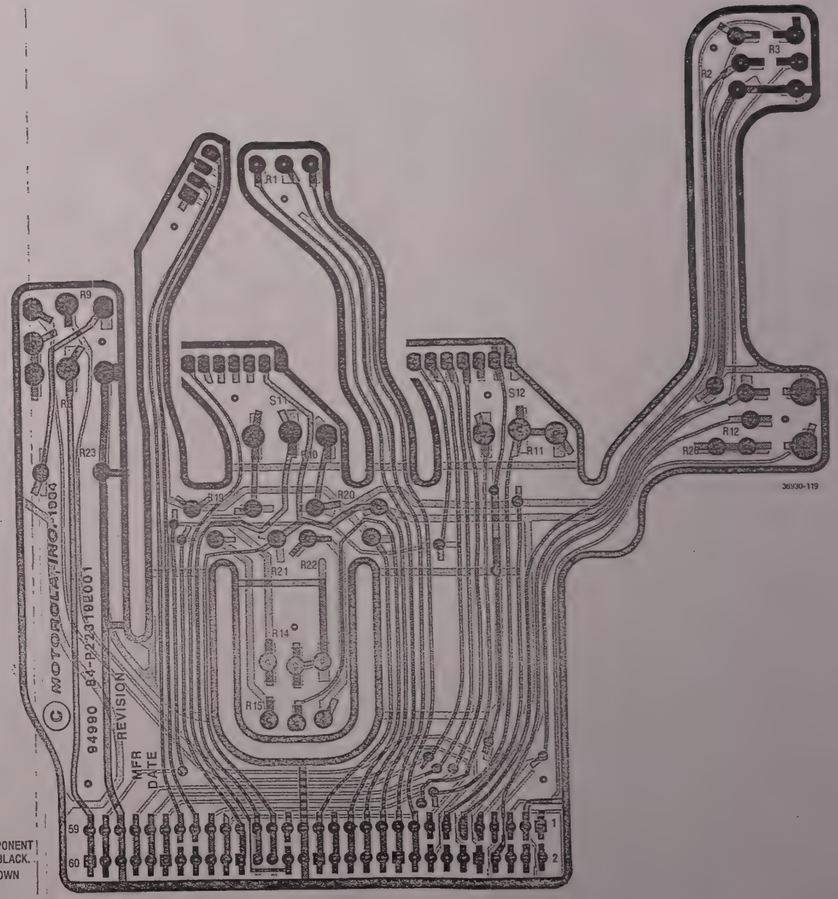

COMPONENTS AND COMPONENT SIDE TRACK SHOWN IN BLACK.
SOLDER-SIDE TRACK SHOWN IN ORANGE

Figure 18-2e. Front Panel Right Flex (Scope) (See Sheet 4, p. 18-9, for Parts List)

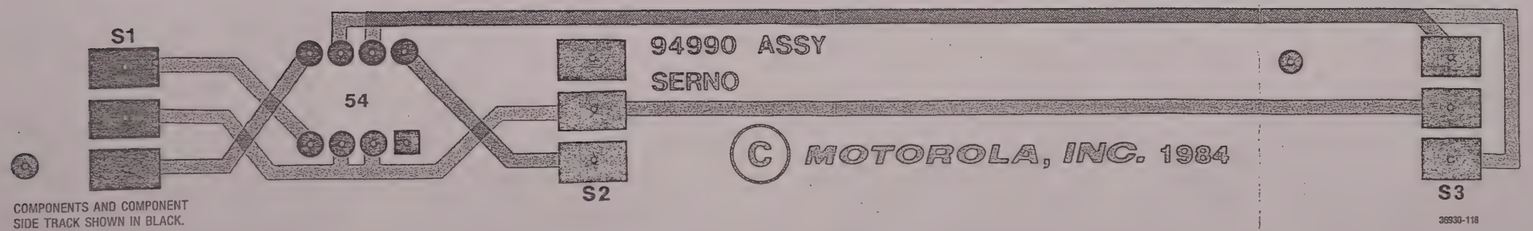

Figure 18-2f. Switch Interconnect Board – Printed Wiring Board Assembly

FRONT PANEL ASSEMBLY

DISPLAY BOARD (A18A1)

(RTC-4049A)

Figure 18-3. Schematic

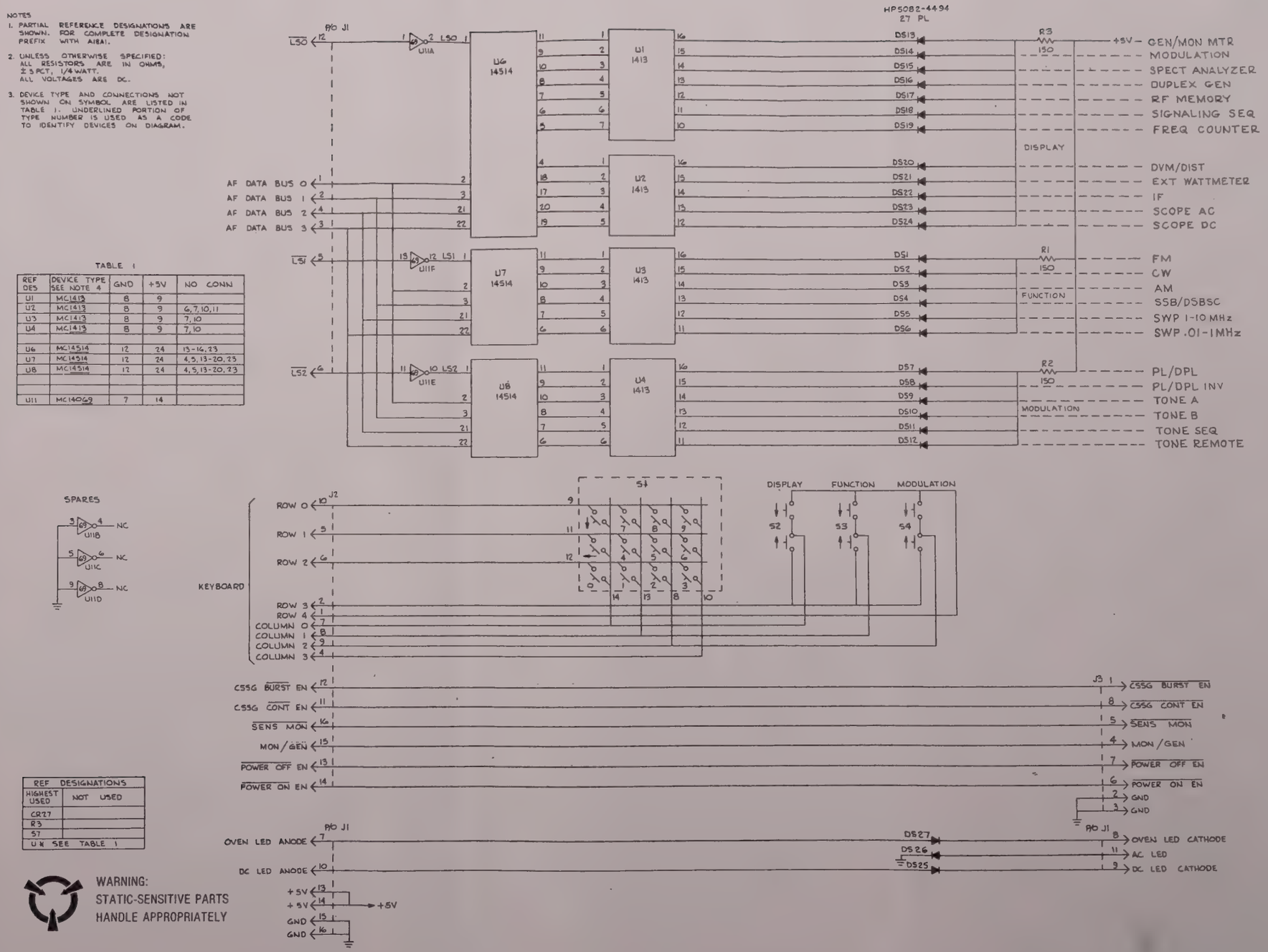

Figure 18-4. Printed Wiring Board Assembly and Parts List

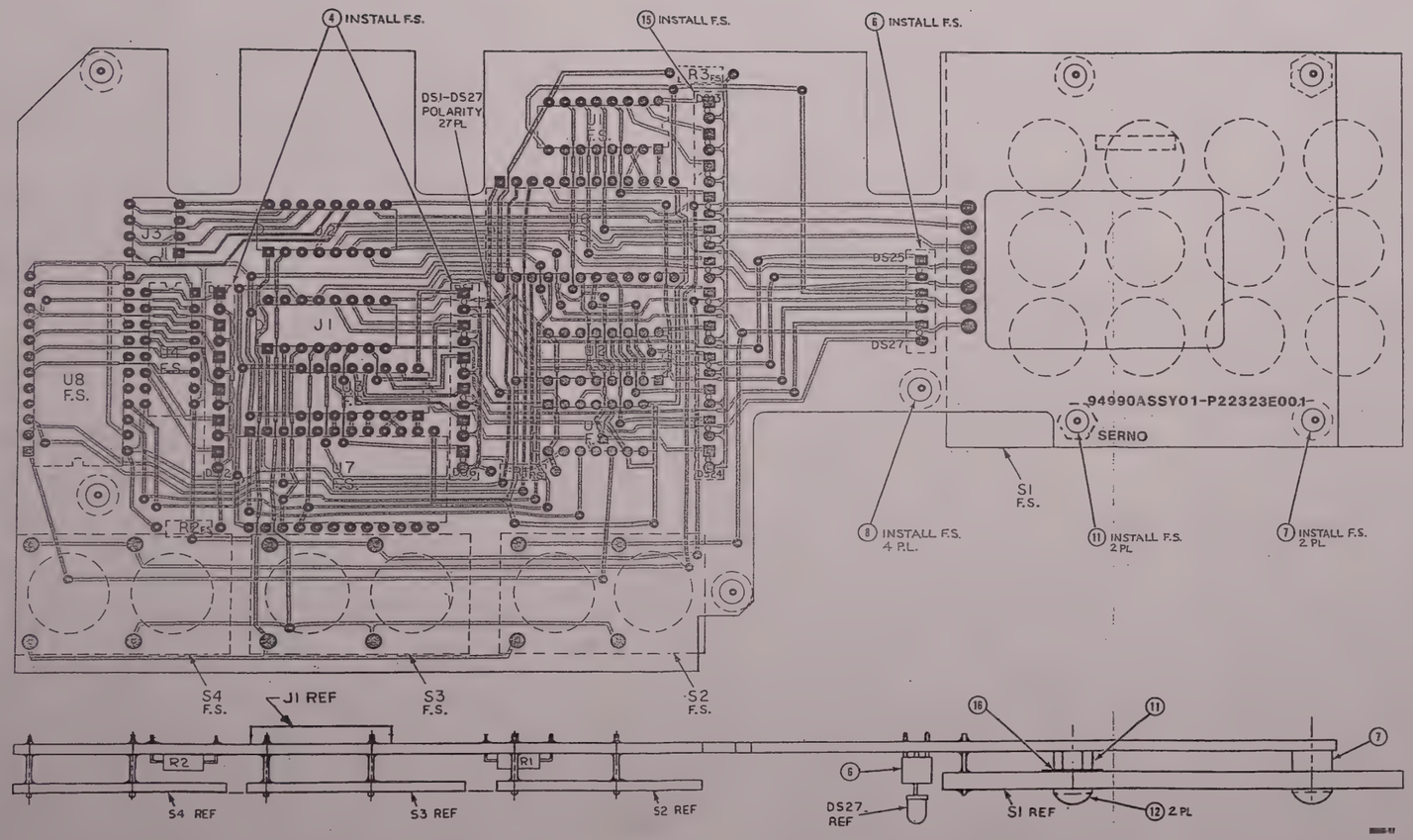

COMPONENTS AND COMPONENT SIDE TRACK SHOWN IN BLACK.
SOLDER-SIDE TRACK SHOWN IN ORANGE

DISPLAY BOARD ASSEMBLY (A18A1)
RTC-4049A

Find No.	Qty. Req.	Part No.	Nomenclature	Part Value
004	2	09-80375B57	SOCKET	12 PIN
005	1	09-80375B58	SOCKET	6 PIN
007	2	43-80375B60	SPACER	
008	4	43-80375B61	SPACER	
011	2	09-80375B74	SPACER, SWAGE	
012	2	03-139581	SCREW	.112-40X.312
015	1	09-80375B59	SOCKET	24 PIN
016	1	14-15140A08	INSULATOR	
DS001	1	48-80396A26	LED	
DS002	1	48-80396A26	LED	
DS003	1	48-80396A26	LED	
DS004	1	48-80396A26	LED	
DS005	1	48-80396A26	LED	
DS006	1	48-80396A26	LED	
DS007	1	48-80396A26	LED	
DS008	1	48-80396A26	LED	
DS009	1	48-80396A26	LED	
DS010	1	48-80396A26	LED	
DS011	1	48-80396A26	LED	
DS012	1	48-80396A26	LED	
DS013	1	48-80396A26	LED	
DS014	1	48-80396A26	LED	
DS015	1	48-80396A26	LED	
DS016	1	48-80396A26	LED	
DS017	1	48-80396A26	LED	
DS018	1	48-80396A26	LED	
DS019	1	48-80396A26	LED	
DS020	1	48-80396A26	LED	
DS021	1	48-80396A26	LED	
DS022	1	48-80396A26	LED	
DS023	1	48-80396A26	LED	
DS024	1	48-80396A26	LED	
DS025	1	48-80396A26	LED	
DS026	1	48-80396A26	LED	
DS027	1	48-80396A26	LED	
J 001	1	09-80331A97	SOCKET, SOLDER DIP	16 PIN
J 002	1	09-80331A97	SOCKET, SOLDER DIP	16 PIN
J 003	1	09-80331A95	SOCKET, SOLDER DIP	8 PIN
R 001	1	06-11009C29	RESISTOR	150-5-1/4
R 002	1	06-11009C29	RESISTOR	150-5-1/4
R 003	1	06-11009C29	RESISTOR	150-5-1/4
S 001	1	40-80396A32	SWITCH, PUSHBUTTON	12 POS
001	1	40-80335A54	SWITCH ASSEMBLY	3 X 4
S 002	1	40-80369A09	SWITCH, PUSHBUTTON	2 POS
001	1	40-80369A10	SWITCH, STRIP	M/F 1KS208
S 003	1	40-80369A09	SWITCH, PUSHBUTTON	2 POS
001	1	40-80369A10	SWITCH, STRIP	M/F 1KS208
S 004	1	40-80369A09	SWITCH, PUSHBUTTON	2 POS
001	1	40-80369A10	SWITCH, STRIP	M/F 1KS208
U 001	1	51-82884L70	INTEGRATED CIRCUIT	
U 002	1	51-82884L70	INTEGRATED CIRCUIT	
U 003	1	51-82884L70	INTEGRATED CIRCUIT	
U 004	1	51-82884L70	INTEGRATED CIRCUIT	
U 006	1	51-82884L32	INTEGRATED CIRCUIT	
U 007	1	51-82884L32	INTEGRATED CIRCUIT	
U 008	1	51-82884L32	INTEGRATED CIRCUIT	
U 011	1	51-05596E02	INTEGRATED CIRCUIT	

SECTION 19.
BATTERY ASSEMBLY

19.1 DESCRIPTION

The RTP-1002A Battery Assembly consists of a battery pack and charger designed to be mounted to the back of the R2001D Communications System Analyzer (Figure 19-1). The unit contains battery capacity to operate the System Analyzer for approximately one hour. A constant-current charging system can recharge the batteries in 16 hours.

A schematic of the battery pack is shown at the end of the section in Figure 19-2, and the printed wiring board assembly and a parts location detail are coordinated with the parts list in Figure 19-3.

19.2 INSTALLATION

The battery pack is quickly installed on the R2001D System Analyzer. With the Analyzer disconnected from the ac line, remove the blower ac connector from the socket on the rear panel of the unit. Remove the two thumbscrews and clips that hold the blower to the rear panel. Lift the blower off and set it aside, noting the position of the blower in relation to the two locating pins on the rear panel. Reverse this procedure to reinstall the blower. Put the caution label (P/N 54-80379A76) on the rear panel of your System Analyzer.

Place the battery pack's left edge tabs into the left feet slots on the Analyzer's rear panel. Two captive screws on the battery pack's right edge engage threaded holes in the rear panel's right feet. Tighten these screws snugly, but do not overtighten. Install the cable from the battery pack in the DC IN jack on the rear panel of the unit, and reconnect the ac line cord.

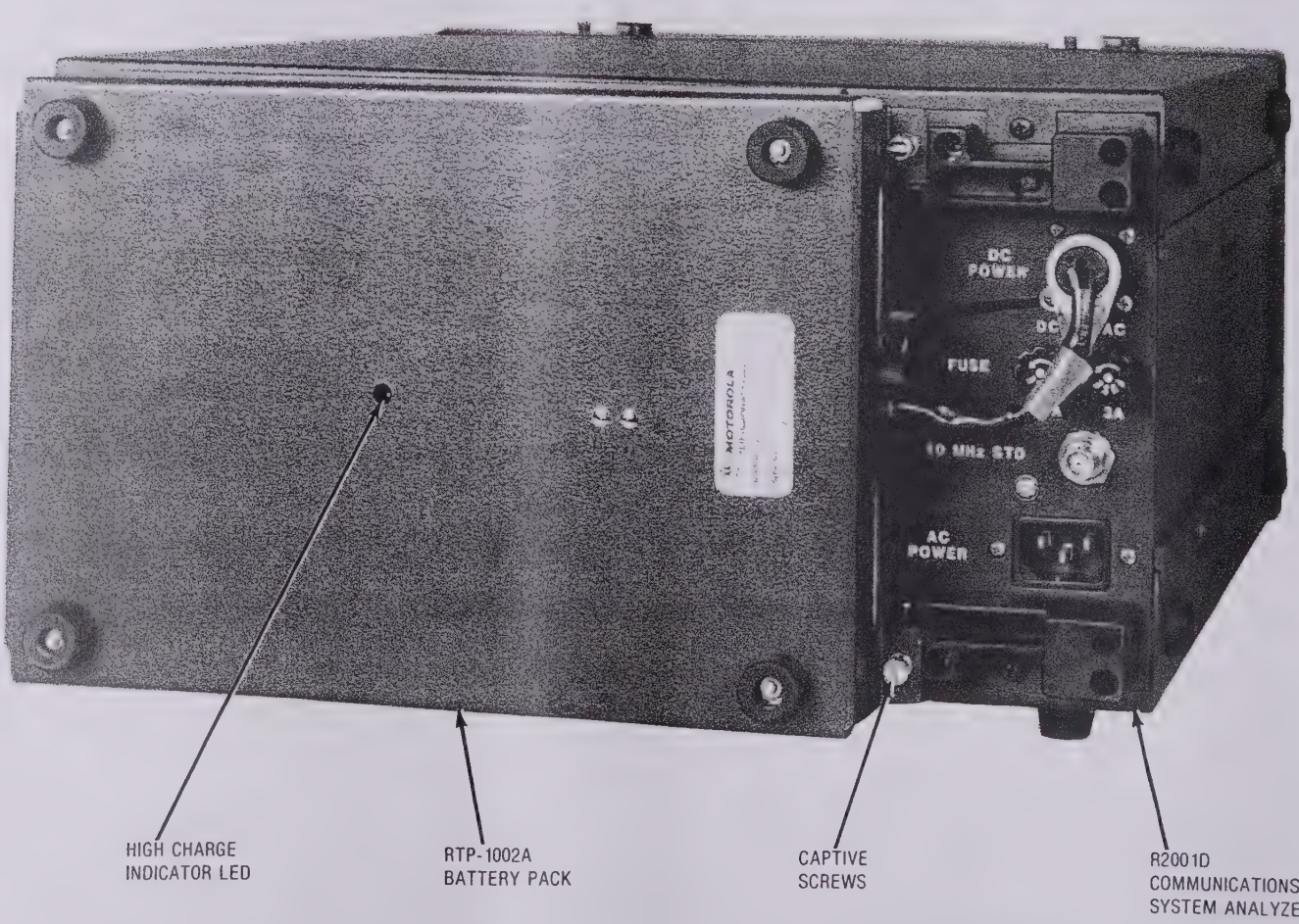

84-7665

Figure 19-1. Battery Pack – Mounting Detail

36930-23

19.3 OPERATION

The battery pack is automatically engaged when no ac power is present, and when the POWER switch is set at either ON or STANDBY. When ac power is applied, the Analyzer automatically switches the battery pack out of the circuit and draws its power from the ac power source.

When the POWER switch is set at OFF or STANDBY, and ac power is applied to the System Analyzer, the battery pack draws dc current from the Analyzer to activate the charging circuit. The charging circuit delivers approximately 750 mA of current until the battery voltage reaches 14V. As the battery voltage reaches 14V, the current drops to approximately 25 mA, and the high-charge indicator LED goes out.

To extend the time the battery can operate the System Analyzer, keep the unit's POWER switch set at STANDBY whenever possible. Because of the low trickle-charge rate, the batteries can be left charging indefinitely without damage from overcharging.

At high ambient temperature, if you plan to operate the Analyzer from the ac line for long periods of time, remove the battery pack and reinstall the blower assembly.

CAUTION

Do NOT permit battery discharge below 10.4 Vdc (as indicated on the CRT in DVM display mode); immediately turn the unit OFF. Allowing battery discharge below this level may permanently damage the battery. To recharge the batteries, plug the System Analyzer into ac power (117/234 Vac) with the POWER switch set at OFF or STANDBY.

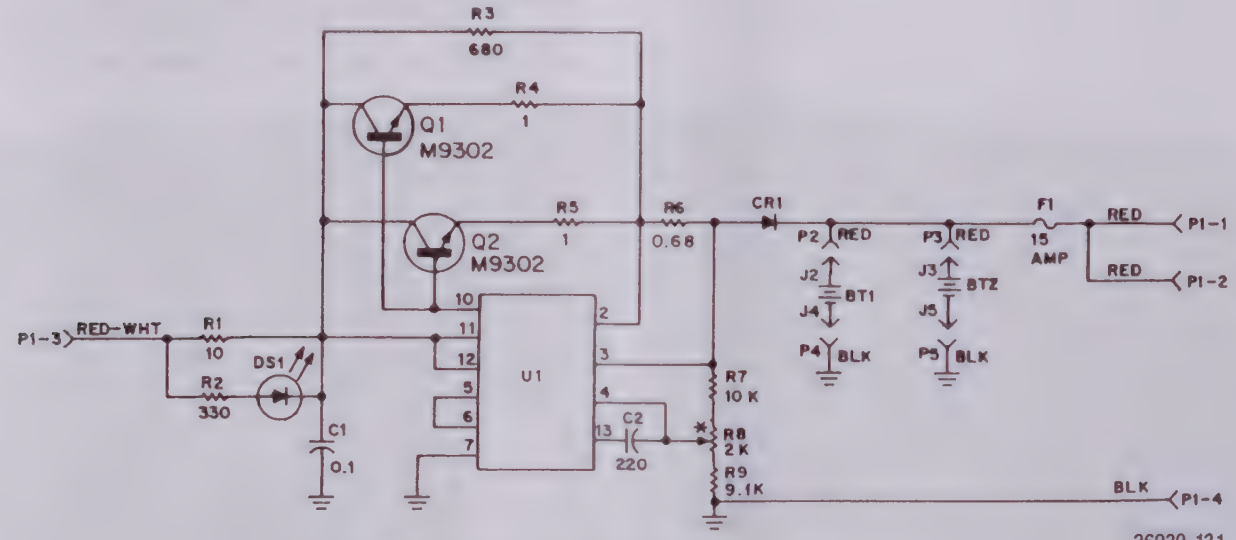

* WITH THE BATTERIES REMOVED (BT1 AND BT2) AND A 30-OHM; 10 WATT RESISTOR IN PLACE OF THE BATTERIES, SET R8 FOR 14.45V ± 50MV USING A DIGITAL VOLTMETER ACROSS THE BATTERY TERMINALS.

Figure 19-2. Battery Pack – Schematic

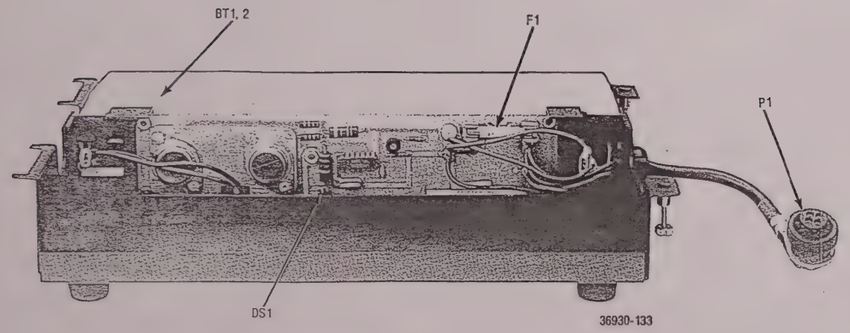

Figure 19-3b. Battery Pack – Parts Location Detail

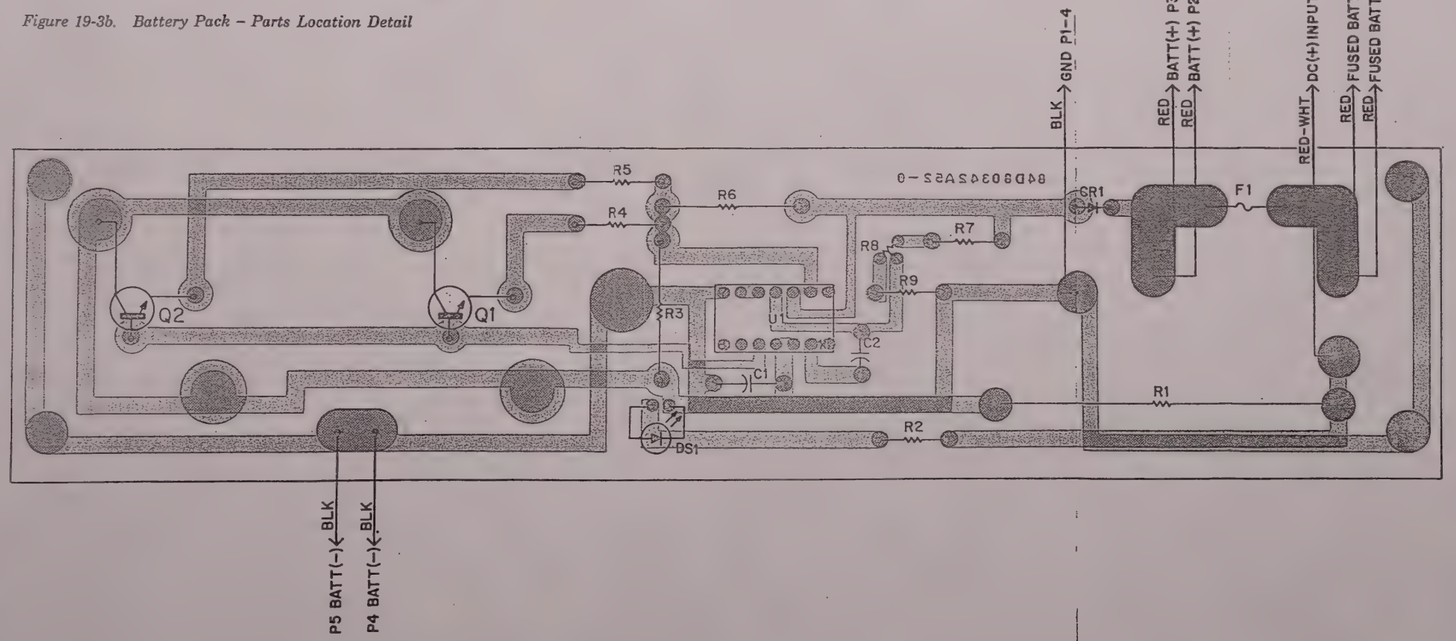

COMPONENTS AND COMPONENT SIDE TRACK SHOWN IN BLACK. SOLDER-SIDE TRACK SHOWN IN ORANGE

Figure 19-3a. Battery Pack – Printed Wiring Board Assembly

BATTERY PACK
RTP-1002A

Find No.	Qty. Req.	Part No.	Nomenclature	Part Value
BT001	1	60-80340A88	BATTERY, 12V	6-CELL
BT002	1	60-80340A88	BATTERY, 12V	6-CELL
C 001	1	8-82096J18	CAPACITOR, FIXED	.1μF-10-250
C 002	1	21-83596E10	CAPACITOR, FIXED	220pF-20-500
CR001	1	48-82525Q01	DIODE, SILICON	
DS001	1	48-82019L05	LED	
F 001	1	65-80490B	FUSE	15A SLOW BLOW
Q 001	1	48-369302	TRANSISTOR	NPN; TYPE M9302
Q 002	1	48-369302	TRANSISTOR	NPN; TYPE M9302
R 001	1	17-80344A60	RESISTOR	10-10-10
R 002	1	6-124C37	RESISTOR	330-10-1/4
R 003	1	6-126C45	RESISTOR	680-10-1
R 004	1	6-125B70	RESISTOR	1-5-1/2
R 005	1	6-125B70	RESISTOR	1-5-1/2
R 006	1	17-80344A71	RESISTOR	.68-5-2
R 007	1	6-124A73	RESISTOR	10K-5-1/4
R 008	1	18-80342A10	RESISTOR, VARIABLE	2K-20-1/2
R 009	1	6-124A72	RESISTOR	9.1K-5-1/4
U 001	1	51-80342A59	INTEGRATED CIRCUIT	MC1723CL
	1	15-80340A92	COVER, BATTERY CASE	
	4	3-120938	SCREW, MACHINE	4-40 X 5/16"
	4	4-7657	WASHER, LOCK; NO.4 EXTERNAL TOOTH	
	1	64-80342A54	PLATE, HEATSINK	
	4	2-7005	NUT, HEX	6-32
	4	4-7666	WASHER, LOCK; NO.6 EXTERNAL TOOTH	
	1	14-80340A91	INSULATOR BOARD	
	4	75-82566B01	FOOT, RUBBER	
	4	3-80342A46	SCREW, MACHINE	6-32 X 1/2"
	5	3-135774	SCREW, MACHINE	4-40 X 1/4"
	2	3-132840	SCREW, MACHINE	8-32 X 5/8"
	5	4-7667	WASHER, LOCK; NO.4 EXTERNAL TOOTH	
	1	54-80379A76	LABEL, CAUTION	
	1	42-850925	CLAMP	

Cable Assembly (P1)
(1-80303A91)

1	15-10811A08	HOUSING, CONNECTOR	4-PIN
4	9-83741F01	CONTACT, RECEPTACLE	
1	42-80340A90	CLAMP, CABLE	
1	2-2888	NUT, HEX	5/8-24

Battery Case
(1-80304A71)

1	27-80335A41	CASE, BATTERY	
2	3-80340A89	SCREW, CAPTIVE	6-32 X 21/32"
1	41-80342A53	SPRING, CLIP	

Circuit Board Assembly
(1-80304A72)

2	42-82690A01	CLIP, FUSEHOLDER	
4	43-865050	STANDOFF, THREADED	

Lead Assembly, Battery (Red)
(1-80304A73)

1	30-10310A26	WIRE, NO. 16 STRANDED	4-1/2"
1	29-859118	CONTACT, RECEPTACLE	

Lead Assembly, Battery (Black)
(1-80304A74)

1	10-134301	WIRE, NO. 16 STRANDED	4-1/2"
1	29-859118	CONTACT, RECEPTACLE	

SECTION 20.
CELLULAR TELEPHONE TEST OPTION

20.1 DESCRIPTION

Cellular telephones can be tested using the Cellular-Telephone Test board. By selecting tests from a menu on the screen, the operator can use the board to provide the data and generate the tones necessary to communicate with a Cellular telephone. This board also contains circuitry to test a Cellular telephone in the Manual Mode and to send the results of an Auto-Test to a printer.

A block diagram of the Cellular-Telephone Test board is shown at the end of the section in Figure 20-1, a schematic in Figure 20-2, and the printed wiring board assembly and parts list in Figure 20-3.

20.2 THEORY OF OPERATION

20.2.1 TRANSMITTED DATA

The system microprocessor generates all data transmitted to the Cellular telephone under test. A synchronous serial-data adapter (SSDA) (U8) on the Cellular-Telephone Test board transforms the data from a parallel to a serial format. The transmitted data is then Manchester-encoded at U1 and filtered by U24.

The transmit clock is divided down to 10 kHz from the 3.84-MHz master oscillator by U3 and U7.

20.2.2 RECEIVED DATA

The data received from the Cellular telephone under test is filtered by U40. A hard limiter (U17) shapes the Manchester-encoded data to CMOS levels.

The data enters a synchronizer IC (U3) where a bit-sync detector derives the receive clock. The received data is then Manchester decoded, and the synchronizer looks for word sync, which is an 11-bit sequence. When it detects word sync, U3 signals the SSDA that valid data is available. The data is then clocked into the SSDA and read by the microprocessor.

20.2.3 CONTROL

The microprocessor controls all data and signal paths through U9, an on-board peripheral-interface adapter (PIA). This PIA disables all analog signals when data is being transmitted, and disables the data path when data is not being transmitted.

20.2.4 MODULATION

The audio-modulation paths are enabled or disabled, depending on whether or not a Cellular test is in progress. As long as there is no Cellular test, the EXT MOD RTN (O), INT MOD RTN (O), and 1 KHz SINE RTN (O) paths are enabled. During a Cellular test, whenever data is not being transmitted, MIC IN, EXT MOD INPUT, INT MOD (I) and 1 KHz SINE RTN (O) are enabled.

During a Cellular test, the System Analyzer transmits a supervisory audio tone (SAT) with a frequency of 5970 Hz, 6000 Hz, or 6030 Hz. This tone comes to the board via the INT MOD (I) line. The SAT passes through an automatic gain control (AGC) circuit (U23 and U25). U25B full-wave rectifies the SAT, and amplifier U23A sets the output level. U23B then compares the average voltage of the rectified signal with 2.5 Vdc. The output of U23B drives the gate of Q2, which acts as a voltage-variable resistor to attenuate the input SAT.

The microphone input port (Mic) on the front panel allows voice to be transmitted to the Cellular telephone under test. The incoming signal is amplified and filtered before it enters compressor U21, which condenses amplitude variations by attenuating high-level signals and amplifying low-level ones. The signal enters a pre-emphasis circuit, and then, to limit the FM deviation to a specified level, an instantaneous deviation control (IDC) circuit. To attenuate harmonics created by the IDC, a splatter filter follows.

The 1 KHz SINE RTN (O) line can be used to measure receiver distortion and sensitivity. EXT MOD INPUT can be used to add an external modulation source.

20.2.5 10-KHz DETECTION

Detect circuitry measures the duration of the Cellular telephone's 10-kHz signaling tone. The received signaling tone comes in via DEMOD CAL AUDIO, where it is filtered to eliminate noise and unwanted signals before becoming an input for a 10-kHz detector (U12). The output of this detector is normally a logic 1. However, when it detects a 10-kHz signal, U12 outputs a logic 0 for the duration of the 10-kHz signal. A timer IC (U10) measures the duration of the logic 0.

20.2.6 MANUAL-MODE CONTROL

With the Manual-Mode Test, the transceiver portion of the Cellular telephone can be manually tested. The Manual-Mode Test connector (CELL BUS) is located on the back of the System Analyzer.

A handshaking (asynchronous) process transfers data to and from the transceiver. The microprocessor controls the signals and their direction through a PIA (U15). All control and data lines are buffered by GPIB transceivers U35 and U36.

20.2.7 PRINTER

The Manual-Mode Test connector also contains the three data and control lines necessary to interface with a printer. The Cellular-Telephone Test board provides the circuitry for these three lines: a ground line (GND), the PRINTER DATA line, which serially outputs data to the printer, and the DATA TERMINAL READY line, which is an input to the Cellular-Telephone Test board. The output-signal levels are in accordance with EIA RS232C.

The printer can provide a hard copy of the results from the Cellular Auto-Test. It can also print out test results displayed on any screen.

CELLULAR-TELEPHONE TEST BOARD (A12) – OPTION A

(RTC-1012A)

Figure 20-1. Block Diagram

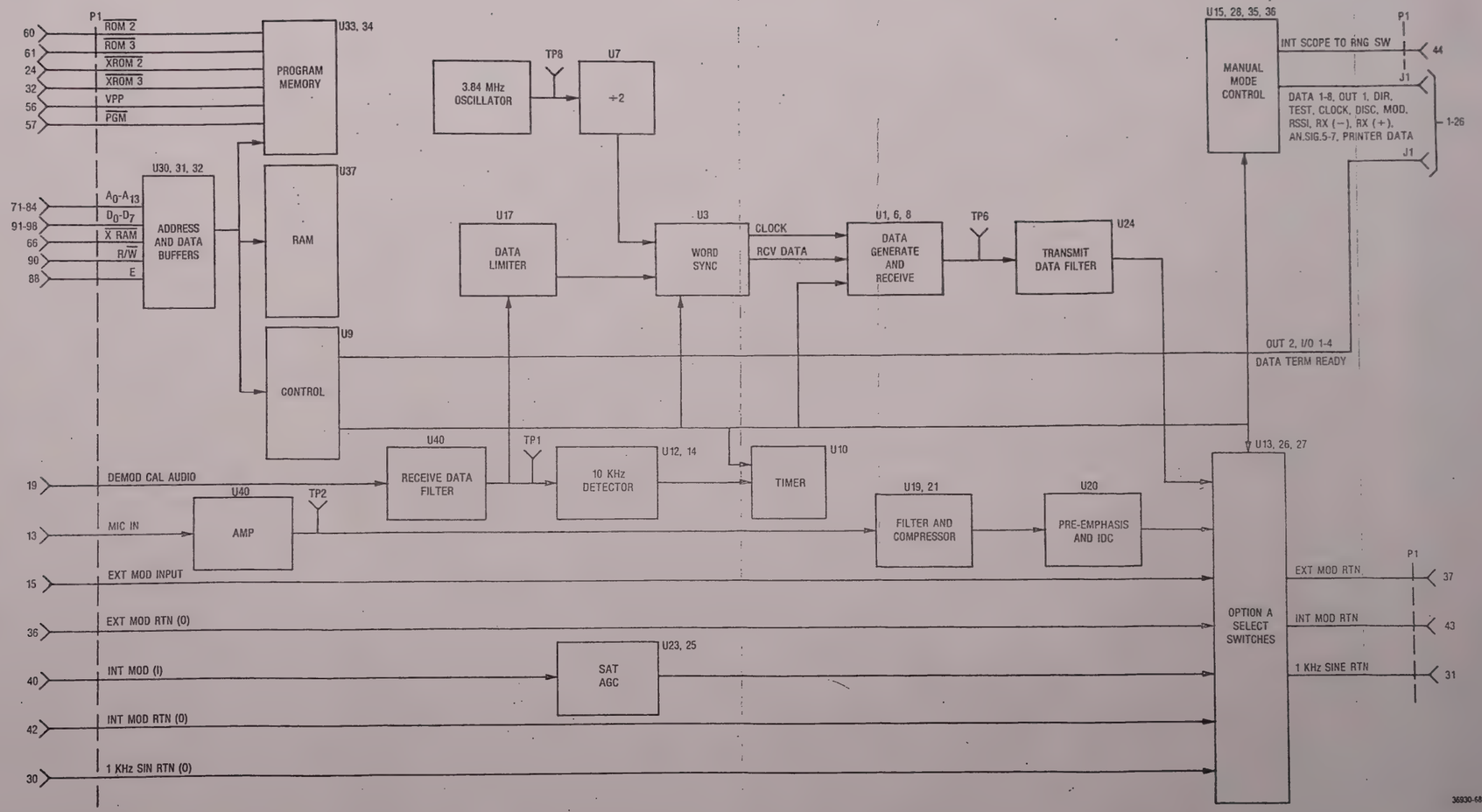

CELLULAR-TELEPHONE TEST OPTION

(RTC-1012A)

Figure 20-2a. Schematic (Sheet 1 of 2)

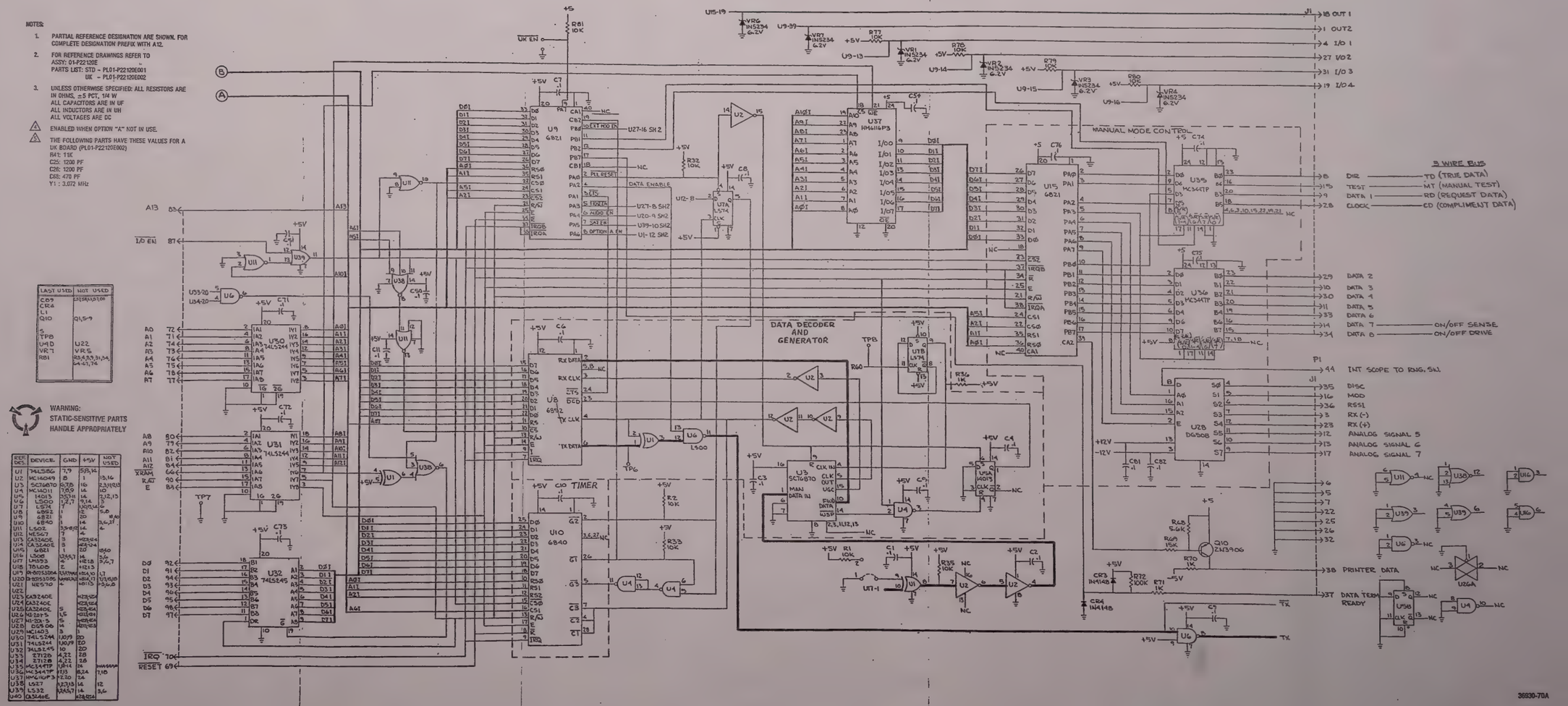

Figure 20-2b. Schematic (Sheet 2 of 2)

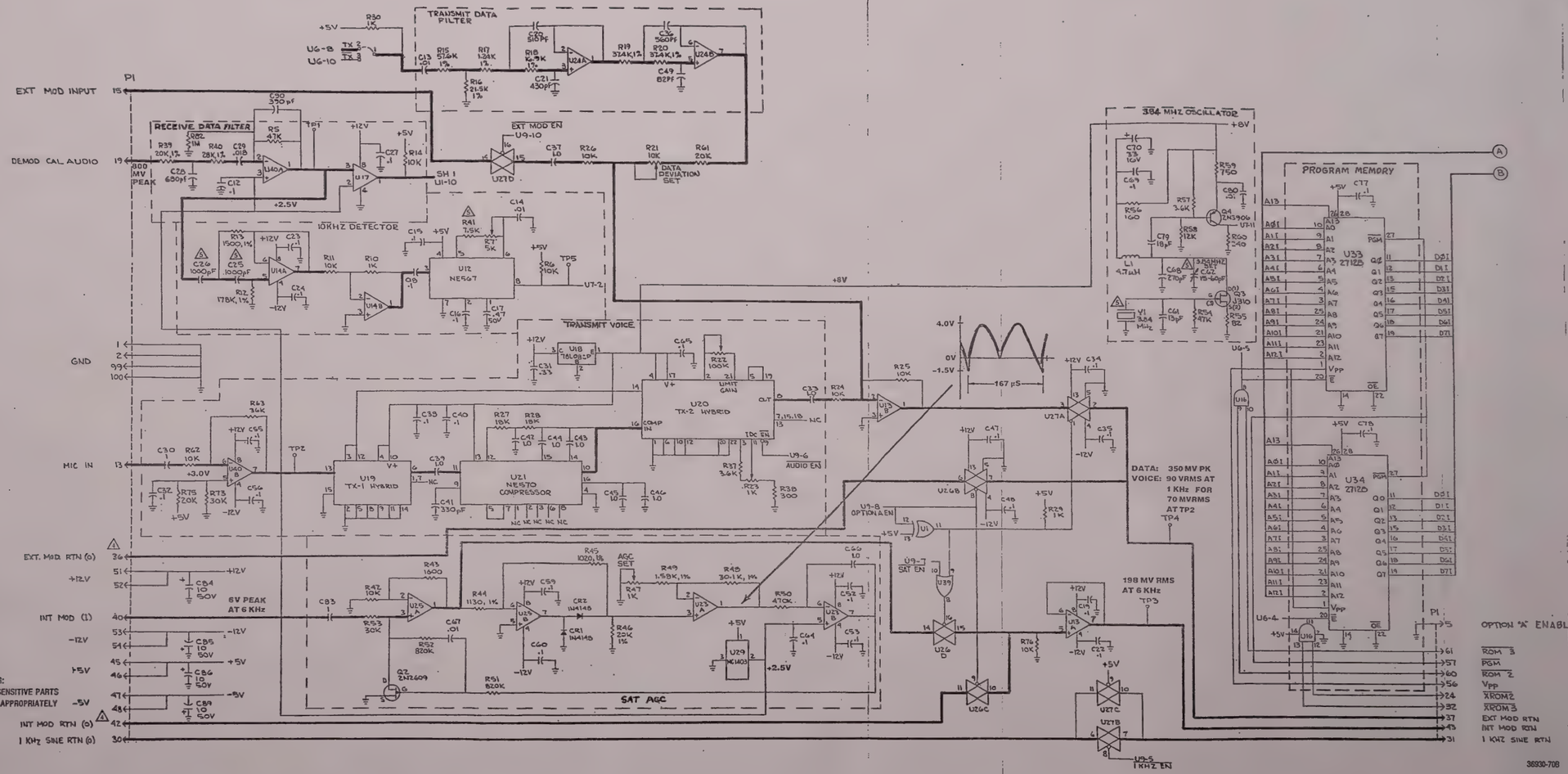

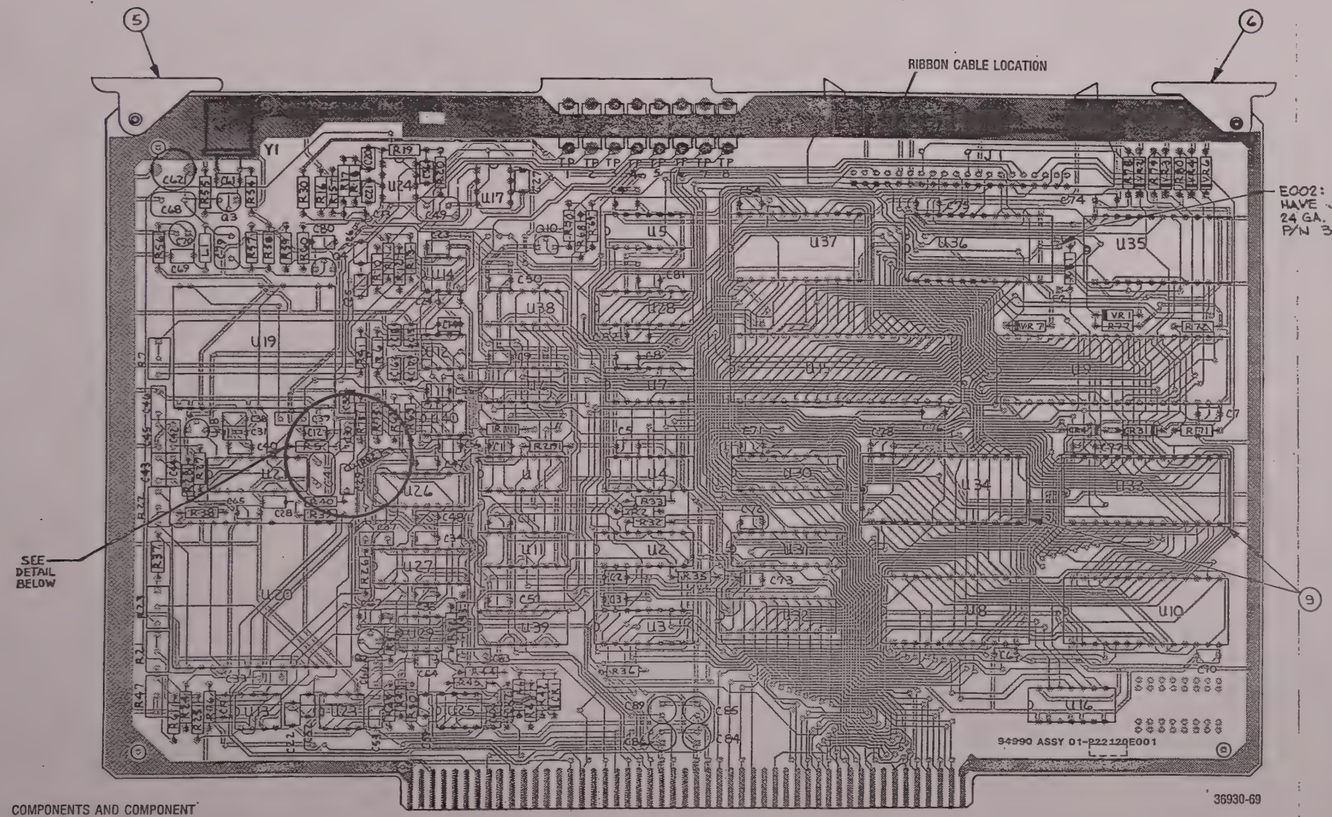

CELLULAR-TELEPHONE TEST BOARD (A12)
OPTION A
RTC-1012A

Find No.	Qty. Req.	Part No.	Nomenclature	Part Value
005	1	45-80339B28	CARD EJECTOR	
006	1	45-80339B31	CARD EJECTOR	MARKED
009	2	09-80343B85	SOCKET	28 PIN
C 001	1	21-80342B10	CAPACITOR	.1UF-20-50
C 002	1	21-80342B10	CAPACITOR	.1UF-20-50
C 003	1	21-80342B10	CAPACITOR	.1UF-20-50
C 004	1	21-80342B10	CAPACITOR	.1UF-20-50
C 005	1	21-80342B10	CAPACITOR	.1UF-20-50
C 006	1	21-80342B10	CAPACITOR	.1UF-20-50
C 007	1	21-80342B10	CAPACITOR	.1UF-20-50
C 008	1	21-80342B10	CAPACITOR	.1UF-20-50
C 009	1	21-80342B10	CAPACITOR	.1UF-20-50
C 010	1	21-80342B10	CAPACITOR	.1UF-20-50
C 011	1	21-80342B10	CAPACITOR	.1UF-20-50
C 012	1	21-80342B10	CAPACITOR	.1UF-20-50
C 013	1	21-80342B09	CAPACITOR	.01UF-20-50
C 014	1	21-80342B09	CAPACITOR	.01UF-20-50
C 015	1	21-80342B10	CAPACITOR	.1UF-20-50
C 016	1	21-80342B10	CAPACITOR	.1UF-20-50
C 017	1	21-80342B14	CAPACITOR	.47UF-20-50
C 018	1	21-80342B10	CAPACITOR	.1UF-20-50
C 019	1	21-80342B10	CAPACITOR	.1UF-20-50
C 020	1	21-80341B75	CAPACITOR	510PF-5-50
C 021	1	21-80341B80	CAPACITOR	430PF-5-50
C 022	1	21-80342B10	CAPACITOR	.1UF-20-50
C 023	1	21-80342B10	CAPACITOR	.1UF-20-50
C 024	1	21-80342B10	CAPACITOR	.1UF-20-50
C 025	1	21-80341B46	CAPACITOR	1000PF-5-50
C 026	1	21-80341B46	CAPACITOR	1000PF-5-50
C 027	1	21-80342B10	CAPACITOR	.1UF-20-50
C 028	1	21-80341B77	CAPACITOR	680PF-5-50
C 029	1	21-80342B35	CAPACITOR	.018UF-5-50
C 030	1	21-80342B46	CAPACITOR	1UF-20-50
C 031	1	21-80342B12	CAPACITOR	.33UF-20-50
C 032	1	21-80342B10	CAPACITOR	.1UF-20-50
C 033	1	21-80342B46	CAPACITOR	1UF-20-50
C 034	1	21-80342B10	CAPACITOR	.1UF-20-50
C 035	1	21-80342B10	CAPACITOR	.1UF-20-50
C 036	1	21-80341B76	CAPACITOR	560PF-5-50
C 037	1	21-80342B46	CAPACITOR	1UF-20-50
C 038	1	21-80342B10	CAPACITOR	.1UF-20-50
C 039	1	21-80342B46	CAPACITOR	1UF-20-50
C 040	1	21-80342B10	CAPACITOR	.1UF-20-50
C 041	1	21-80339B19	CAPACITOR	330PF-5-100
C 042	1	21-80342B46	CAPACITOR	1UF-20-50
C 043	1	21-80342B46	CAPACITOR	1UF-20-50
C 044	1	21-80342B46	CAPACITOR	1UF-20-50
C 045	1	21-80342B46	CAPACITOR	1UF-20-50
C 046	1	21-80342B46	CAPACITOR	1UF-20-50
C 047	1	21-80342B10	CAPACITOR	.1UF-20-50
C 048	1	21-80342B10	CAPACITOR	.1UF-20-50
C 049	1	21-80339B18	CAPACITOR	82PF-5-500
C 050	1	21-80342B10	CAPACITOR	.1UF-20-50
C 051	1	21-80342B10	CAPACITOR	.1UF-20-50
C 052	1	21-80342B10	CAPACITOR	.1UF-20-50
C 053	1	21-80342B10	CAPACITOR	.1UF-20-50
C 054	1	21-80342B10	CAPACITOR	.1UF-20-50
C 055	1	21-80342B10	CAPACITOR	.1UF-20-50
C 056	1	21-80342B10	CAPACITOR	.1UF-20-50
C 059	1	21-80342B10	CAPACITOR	.1UF-20-50
C 060	1	21-80342B10	CAPACITOR	.1UF-20-50
C 061	1	21-80341B51	CAPACITOR	13PF-5-50
C 062	1	21-80339B43	CAPACITOR	15 TO 60PF-200
C 064	1	21-80342B10	CAPACITOR	.1UF-20-50
C 065	1	21-80342B10	CAPACITOR	.1UF-20-50
C 066	1	21-80342B46	CAPACITOR	1UF-20-50
C 067	1	21-80342B09	CAPACITOR	.01UF-20-50
C 068	1	21-80339B22	CAPACITOR	270PF-5-300
C 069	1	21-80342B10	CAPACITOR	.1UF-20-50
C 070	1	23-84655F24	CAPACITOR	33UF-20-16
C 071	1	21-80342B10	CAPACITOR	.1UF-20-50
C 072	1	21-80342B10	CAPACITOR	.1UF-20-50
C 073	1	21-80342B10	CAPACITOR	.1UF-20-50
C 074	1	21-80342B10	CAPACITOR	.1UF-20-50
C 075	1	21-80342B10	CAPACITOR	.1UF-20-50
C 076	1	21-80342B10	CAPACITOR	.1UF-20-50
C 077	1	21-80342B10	CAPACITOR	.1UF-20-50
C 078	1	21-80342B10	CAPACITOR	.1UF-20-50
C 079	1	21-80339B13	CAPACITOR	18PF-5-500
C 080	1	21-80342B09	CAPACITOR	.01UF-20-50
C 081	1	21-80342B10	CAPACITOR	.1UF-20-50

CELLULAR-TELEPHONE TEST OPTION
(RTC-1012A)

Figure 20-3. Printed Wiring Board Assembly and Parts List

CELLULAR-TELEPHONE TEST OPTION

RTC-1012A

Find No.	Qty. Req.	Part No.	Nomenclature	Part Value
C 082	1	21-80342B10	CAPACITOR	.1UF-20-50
C 083	1	21-80342B46	CAPACITOR	1UF-20-50
C 084	1	23-80341B15	CAPACITOR	10UF-20-50
C 085	1	23-80341B15	CAPACITOR	10UF-20-50
C 086	1	23-80341B15	CAPACITOR	10UF-20-50
C 089	1	23-80341B15	CAPACITOR	10UF-20-50
C 090	1	21-80339B21	CAPACITOR	390PF-5-100
CR001	1	48-84463K02	DIODE	
CR002	1	48-84463K02	DIODE	
CR003	1	48-84463K02	DIODE	
CR004	1	48-84463K02	DIODE	
J 001	1	28-80343B53	CONNECTOR	40 PIN HEADER
L 001	1	24-80340B55	COIL	4.7UH
Q 002	1	48-80342B47	TRANSISTOR	
Q 003	1	48-00869878	TRANSISTOR	
Q 004	1	RG-2N3906	TRANSISTOR	
Q 010	1	RG-2N3906	TRANSISTOR	
R 001	1	06-11009C73	RESISTOR	10K-5-1/4
R 002	1	06-11009C73	RESISTOR	10K-5-1/4
R 005	1	06-11009C89	RESISTOR	47K-5-1/4
R 006	1	06-11009C73	RESISTOR	10K-5-1/4
R 007	1	18-83452F11	RESISTOR,VARIABLE	5K
R 010	1	06-11009C49	RESISTOR	1K-5-1/4
R 011	1	06-11009C73	RESISTOR	10K-5-1/4
R 012	1	06-10621E13	RESISTOR	178K-1-1/4
R 013	1	06-10621C12	RESISTOR	1.5K-1-1/4
R 014	1	06-11009C73	RESISTOR	10K-5-1/4
R 015	1	06-10621D55	RESISTOR	57.6K-1-1/4
R 016	1	06-10621D24	RESISTOR	21.5K-1-1/4
R 017	1	06-10621C04	RESISTOR	1.24K-1-1/4
R 018	1	06-10621D14	RESISTOR	16.9K-1-1/4
R 019	1	06-10621D47	RESISTOR	37.4K-1-1/4
R 020	1	06-10621D47	RESISTOR	37.4K-1-1/4
R 021	1	18-83452F13	RESISTOR,VARIABLE	10K
R 022	1	18-83452F19	RESISTOR,VARIABLE	100K
R 023	1	18-83452F09	RESISTOR,VARIABLE	1K
R 024	1	06-11009C73	RESISTOR	10K-5-1/4
R 025	1	06-11009C73	RESISTOR	10K-5-1/4
R 026	1	06-11009C73	RESISTOR	10K-5-1/4
R 027	1	06-11009C79	RESISTOR	18K-5-1/4
R 028	1	06-11009C79	RESISTOR	18K-5-1/4
R 029	1	06-11009C49	RESISTOR	1K-5-1/4
R 030	1	06-11009C49	RESISTOR	1K-5-1/4
R 032	1	06-11009C73	RESISTOR	10K-5-1/4
R 033	1	06-11009C73	RESISTOR	10K-5-1/4
R 035	1	06-11009C73	RESISTOR	10K-5-1/4
R 036	1	06-11009C49	RESISTOR	1K-5-1/4
R 037	1	06-11009C62	RESISTOR	3.6K-5-1/4
R 038	1	06-11009C36	RESISTOR	300-5-1/4
R 039	1	06-10621D21	RESISTOR	20K-1-1/4
R 040	1	06-10621D35	RESISTOR	28K-1-1/4
R 041	1	06-11009C70	RESISTOR	7.5K-5-1/4
R 042	1	06-11009C73	RESISTOR	10K-5-1/4
R 043	1	06-11009C54	RESISTOR	1.5K-5-1/4
R 044	1	06-10621B99	RESISTOR	1.13K-1-1/4
R 045	1	06-10621B95	RESISTOR	1.02K-1-1/4
R 046	1	06-10621D21	RESISTOR	20K-1-1/4
R 047	1	18-83452F09	RESISTOR,VARIABLE	1K
R 048	1	06-10621D38	RESISTOR	30.1K-1-1/4
R 049	1	06-10621C14	RESISTOR	1.58K-1-1/4
R 050	1	06-11009D14	RESISTOR	470K-5-1/4
R 051	1	06-11009D20	RESISTOR	820K-5-1/4
R 052	1	06-11009D20	RESISTOR	820K-5-1/4
R 053	1	06-11009C84	RESISTOR	30K-5-1/4
R 054	1	06-11009C89	RESISTOR	47K-5-1/4
R 055	1	06-11009C23	RESISTOR	82-5-1/4
R 056	1	06-11009C30	RESISTOR	160-5-1/4
R 057	1	06-11009C62	RESISTOR	3.6K-5-1/4
R 058	1	06-11009C75	RESISTOR	12K-5-1/4
R 059	1	06-11009C46	RESISTOR	750-5-1/4
R 060	1	06-11009C34	RESISTOR	240-5-1/4
R 061	1	06-11009C80	RESISTOR	20K-5-1/4
R 062	1	06-11009C73	RESISTOR	10K-5-1/4
R 063	1	06-11009C86	RESISTOR	36K-5-1/4
R 068	1	06-11009C67	RESISTOR	5.6K-5-1/4
R 069	1	06-11009C77	RESISTOR	15K-5-1/4
R 070	1	06-11009C49	RESISTOR	1K-5-1/4
R 071	1	06-11009C49	RESISTOR	1K-5-1/4
R 072	1	06-11009C97	RESISTOR	100K-5-1/4
R 073	1	06-11009C84	RESISTOR	30K-5-1/4
R 075	1	06-11009C80	RESISTOR	20K-5-1/4
R 076	1	06-11009C73	RESISTOR	10K-5-1/4
R 077	1	06-11009C73	RESISTOR	10K-5-1/4
R 078	1	06-11009C73	RESISTOR	10K-5-1/4
R 079	1	06-11009C73	RESISTOR	10K-5-1/4
R 080	1	06-11009C73	RESISTOR	10K-5-1/4
R 081	1	06-11009C73	RESISTOR	10K-5-1/4
R 082	1	06-11009D22	RESISTOR	1M-5-1/4
TP001	1	09-80331A88	JACK	WHITE
TP002	1	09-80331A88	JACK	WHITE
TP003	1	09-80331A88	JACK	WHITE
TP004	1	09-80331A88	JACK	WHITE
TP005	1	09-80331A88	JACK	WHITE
TP006	1	09-80331A88	JACK	WHITE
TP007	1	09-80331A88	JACK	WHITE
TP008	1	09-80331A88	JACK	WHITE
U 001	1	51-82609M79	INTEGRATED CIRCUIT	
U 002	1	51-82884L02	INTEGRATED CIRCUIT	
U 003	1	51-82609M28	INTEGRATED CIRCUIT	SC76870
U 004	1	51-05596E46	INTEGRATED CIRCUIT	SCREENED
U 005	1	51-05596E15	INTEGRATED CIRCUIT	
U 006	1	51-84561L04	INTEGRATED CIRCUIT	
U 007	1	51-83627M93	INTEGRATED CIRCUIT	
U 008	1	51-82807K10	INTEGRATED CIRCUIT	
U 009	1	51-82807K20	INTEGRATED CIRCUIT	
U 010	1	51-82848M44	INTEGRATED CIRCUIT	
U 011	1	51-84561L06	INTEGRATED CIRCUIT	
U 012	1	51-82609M34	INTEGRATED CIRCUIT	
U 013	1	51-80345A04	INTEGRATED CIRCUIT	CA3240E SCREENED
U 014	1	51-80345A04	INTEGRATED CIRCUIT	CA3240E SCREENED
U 015	1	51-82807K20	INTEGRATED CIRCUIT	
U 016	1	51-84561L07	INTEGRATED CIRCUIT	SCREENED
U 017	1	51-80345A10	INTEGRATED CIRCUIT	LM393N SCREENED
U 018	1	51-05683H01	INTEGRATED CIRCUIT	
U 019	1	51-80341B35	INTEGRATED CIRCUIT	
U 020	1	51-80341B36	INTEGRATED CIRCUIT	
U 021	1	51-80340B71	INTEGRATED CIRCUIT	
U 023	1	51-80345A04	INTEGRATED CIRCUIT	CA3240E SCREENED
U 024	1	51-80345A04	INTEGRATED CIRCUIT	CA3240E SCREENED
U 025	1	51-80345A04	INTEGRATED CIRCUIT	CA3240E SCREENED
U 026	1	51-80345A05	INTEGRATED CIRCUIT	HI-201-5 SCREENED
U 027	1	51-80345A05	INTEGRATED CIRCUIT	HI-201-5 SCREENED
U 028	1	51-80396A13	INTEGRATED CIRCUIT	DG508CJ SCREENED
U 029	1	51-05469E13	INTEGRATED CIRCUIT	
U 030	1	51-82609M56	INTEGRATED CIRCUIT	
U 031	1	51-82609M56	INTEGRATED CIRCUIT	
U 032	1	51-82609M57	INTEGRATED CIRCUIT	
U 033	1	51-80339B89	INTEGRATED CIRCUIT	EPROM
U 034	1	51-80339B89	INTEGRATED CIRCUIT	EPROM
U 035	1	51-80343B38	INTEGRATED CIRCUIT	MC3447
U 036	1	51-80343B38	INTEGRATED CIRCUIT	MC3447
U 037	1	51-80340B03	INTEGRATED CIRCUIT	RAM
U 038	1	51-84561L38	INTEGRATED CIRCUIT	
U 039	1	51-84561L36	INTEGRATED CIRCUIT	
U 040	1	51-80345A04	INTEGRATED CIRCUIT	CA3240E SCREENED
VR001	1	48-80342B16	DIODE,ZENER	6.2V
VR002	1	48-80342B16	DIODE,ZENER	6.2V
VR003	1	48-80342B16	DIODE,ZENER	6.2V
VR004	1	48-80342B16	DIODE,ZENER	6.2V
VR005	1	48-80342B16	DIODE,ZENER	6.2V
VR006	1	48-80342B16	DIODE,ZENER	6.2V
VR007	1	48-80342B16	DIODE,ZENER	6.2V
Y 001	1	48-80343B31	CRYSTAL	

Find No.	Qty. Req.	Part No.	Nomenclature	Part Value
Cellular Interface Kit				
001	1	RTC-1012A	OPTION'A' BD ASSY(A12)	
002	1	30-80344B13	CABLE ASSEMBLY, RIBBON	OPTION A/BACK PANEL
003	2	55-80339B88	LATCH	
Cellular Connector Kit				
001	1	RTC-4048A	PRINTED WIRING BOARD ASSY	JUMPER CARD
001			**Jumper Card (Option A)** RTC-4048A	
004	1	45-80339B28	CARD EJECTOR	
005	1	45-80339B32	CARD EJECTOR	MARKED
006	4	30-80344B18	JUMPER,WIRE	

Find No.	Qty. Req.	Part No.	Nomenclature	Part Value

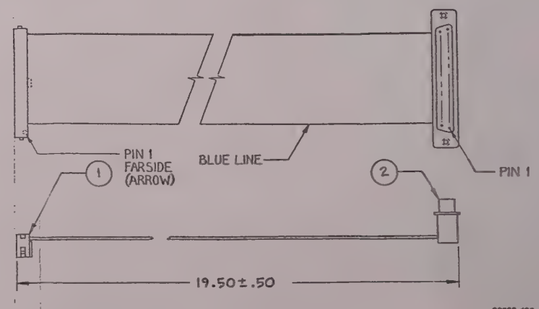

36930-136

002 **Cable Assembly, Ribbon**
30-80344B13

001	1	09-80343B54	CLOSED END SOCKET	40 PIN
002	1	09-80339B74	CONNECTOR, FEMALE	37 PIN

SECTION 21.
IEEE INTERFACE OPTION
REMOTE INTERFACE OPTION

PART 1. IEEE INTERFACE

21.1 DESCRIPTION

An IEEE-488 bus and the IEEE Interface board provide remote control of the system. The IEEE Interface board provides the interface for the 488 bus, thus allowing processor-control of most of the functions normally controlled from the front panel. The IEEE Interface board also contains a multipurpose input/output (I/O) port, which can be used to control equipment, to output data, or to monitor data.

A block diagram of the IEEE Interface board is shown at the end of the section in Figure 21-1, a schematic in Figure 21-2, and the printed wiring board assembly and parts list in Figure 21-3. Figure 21-4 shows the assembly and parts list of the A17 RF Input module's IEEE option.

21.2 THEORY OF OPERATION

21.2.1 IEEE BUS INTERFACE

The IEEE bus interface circuit provides for bus buffering and interface protocol as defined by the IEEE-488 specification. The system processor accesses the interface directly through its address, data, and control busses, which are used for reading from or writing to the IEEE bus.

The address of the System Analyzer's IEEE bus is set on the IEEE Interface board via the top four switches on a dip switch. The least significant bit is the top switch. Using the binary equivalent of the address number, the operator can set the address. Setting the switches to ON gives a logic 1.

21.2.2 RF-LEVEL CONTROL

The circuitry for RF-level control selects either the 5 VDC + AM MOD input for remote control or the AM MOD + DC REF (I) input for local control. For remote control, the 5 VDC + AM MOD input is electronically attenuated to provide the requested RF output level. For local control, the attenuator is programmed for unity gain so that the AM MOD + DC REF (I) signal from the front panel's RF-level potentiometer controls the RF output level.

For the IEEE control option, an electronically programmable RF step attenuator is installed in the system. The processor then controls the attenuator through the address-decode and control-latch circuitry on the IEEE Interface board.

21.2.3 MODULATION CONTROL

The IEEE Interface board can individually control each of the three modulation sources. For remote control, the respective modulation input — INT MOD (I), EXT MOD (I), and 1 KHz SINE (I) — is switched to a programmable attenuator. The system processor selects the level of attenuation necessary to provide the requested level of modulation. For local control, the attenuators are programmed for unity gain, and the respective modulation signal from the front panel's level control — INT MOD RTN (I), EXT MOD RTN (I) and 1 KHz SINE RTN (I) — is selected and sent to the attenuator to control the modulation level.

21.2.4 ADDRESS-DECODE AND CONTROL-LATCH CIRCUITRY

With the address-decode and control-latch circuitry, the system processor has direct control over the programmable attenuators on the board. Control data on the data bus (D0-D7) is latched at the control latch indicated by the address bus (A0-A15).

21.2.5 MULTIPURPOSE INPUT/OUTPUT AND RELAY PORTS

A side-panel connector provides 16 multipurpose input/output (I/O) ports and two pairs of relay ports. The I/O ports can be configured as either inputs or outputs. Data is written to or read from these ports via the IEEE bus. All these ports meet TTL logic-level requirements for positive logic. As inputs, I/O 1 to I/O 8 represent no more than two standard TTL loads each, while I/O 9 to I/O 16 are high-impedance loads. As outputs, each port can drive up to two standard TTL loads. I/O 9 to I/O 16 can also supply a minimum of 1 mA at 1.5V.

Two pairs of ports are connected to relays in such a way that the two ports of each set are normally unconnected. However, when the relay is activated, the ports are shorted together. Each relay port can switch a maximum of 28 Vdc at 0.8A. Each relay port is also isolated from the system chassis to a voltage level of 500 Vdc.

PART 2. REMOTE INTERFACE

21.3 DESCRIPTION

The IEEE-488 bus and RS-232 bus on the Remote Interface board provide remote control of the system. The Remote Interface board provides the interface for the IEEE-488 and RS-232 buses, thus allowing processor control of most of the functions normally controlled from the front panel. The Remote Interface board also contains a multipurpose input/output (I/O) port, which can be used to control equipment, to output data, or to monitor data.

A block diagram of the Remote Interface board is shown at the end of the section in Figure 21-1, a schematic in Figure 21-5, and the printed wiring board assembly and parts list in Figure 21-6. Figure 21-4 shows the assembly and parts list of the A17 RF Input module's remote option.

21.4 THEORY OF OPERATION

21.4.1 IEEE BUS INTERFACE

The IEEE bus interface circuit provides for bus buffering and interface protocol as defined by the IEEE-488 specification. The system processor accesses the interface directly through its address, data, and control buses, which are used for reading from or writing to the IEEE bus.

The address of the system analyzer's IEEE bus is set on the IEEE Interface board via the top four switches on a dip switch. The top switch sets the least significant bit. Using the binary equivalent of the address number, the operator can set the address. Setting the switches to ON gives a logic 1.

21.4.2 RS-232 BUS INTERFACE

The RS-232 bus interface circuit provides for bus buffering of the interface protocol as defined by the RS-232 specification. The system processor also accesses this interface directly through its address, data, and control lines.

The programmer must configure the RS-232 communication parameters of the analyzer to match the particular controller that is being used. This can be accomplished by using special function 95. Once the RS-232 port parameters are correctly set, the programmer need only connect the controller to the analyzer using one of the setups described in the user's manual.

21.4.3 RF-LEVEL CONTROL

The circuitry for RF-level control selects either the 5 VDC + AM MOD input for remote control, or the AM MOD + DC REF (I) input for local control. For remote control, the 5 VDC + AM MOD input is electronically attenuated to provide the requested RF output level. For local control, the attenuator is programmed for unity gain so that the AM MOD + DC REF (I) signal from the front panel's RF-LEVEL potentiometer controls the RF output level.

For the remote control option, an electronically programmable RF step attenuator is installed in the system. The processor controls the attenuator through the address decode and control latch circuitry on the Remote Interface board.

21.4.4 MODULATION CONTROL

The Remote Interface board can individually control each of the three modulation sources. For remote control, the respective modulation input — INT MOD (I), EXT MOD (I), and 1 kHz SINE (I) — is switched to a programmable attenuator. The system processor selects the level of attenuation necessary to provide the requested level of modulation. For local control, the attenuators are programmed for unity gain, and the respective modulation signal from the front panel's level control — INT MOD RTN (I), EXT MOD RTN (I), and 1 kHz SINE RTN (I) — is selected and sent to the attenuator to control the modulation level.

21.4.5 ADDRESS-DECODE AND CONTROL-LATCH CIRCUITRY

With the address decode and control latch circuitry, the system processor has direct control over the programmable attenuators on the board. Control data on the data bus (DO-D7) is latched at the control latch indicated by the address bus (A0-A15).

21.4.6 MULTIPURPOSE INPUT/OUTPUT AND RELAY PORTS

A side-panel connector provides 16 multipurpose input/output (I/O) ports and two pairs of relay ports. The I/O ports can be configured as either inputs or outputs. Data is written to or read from these ports via the remote bus. All these ports meet TTL logic level requirements for positive logic. As inputs, I/O 1 to I/O 8 represent no more than two standard TTL loads each, while I/O 9 to I/O 16 are high impedance loads. As outputs, each port can drive as many as two standard TTL loads. I/O 0 to I/O 16 can also supply a minimum of 1 mA at 1.5 Vdc.

Two pairs of ports are connected to relays in such a way that the two ports of each set are normally unconnected. However, when the relay is activated, the ports are shorted together. Each relay port can switch a maximum of 28 Vdc at 0.8 A. Each relay port is also isolated from the system chassis to a voltage level of 500 Vdc.

Figure 21-1. Block Diagram

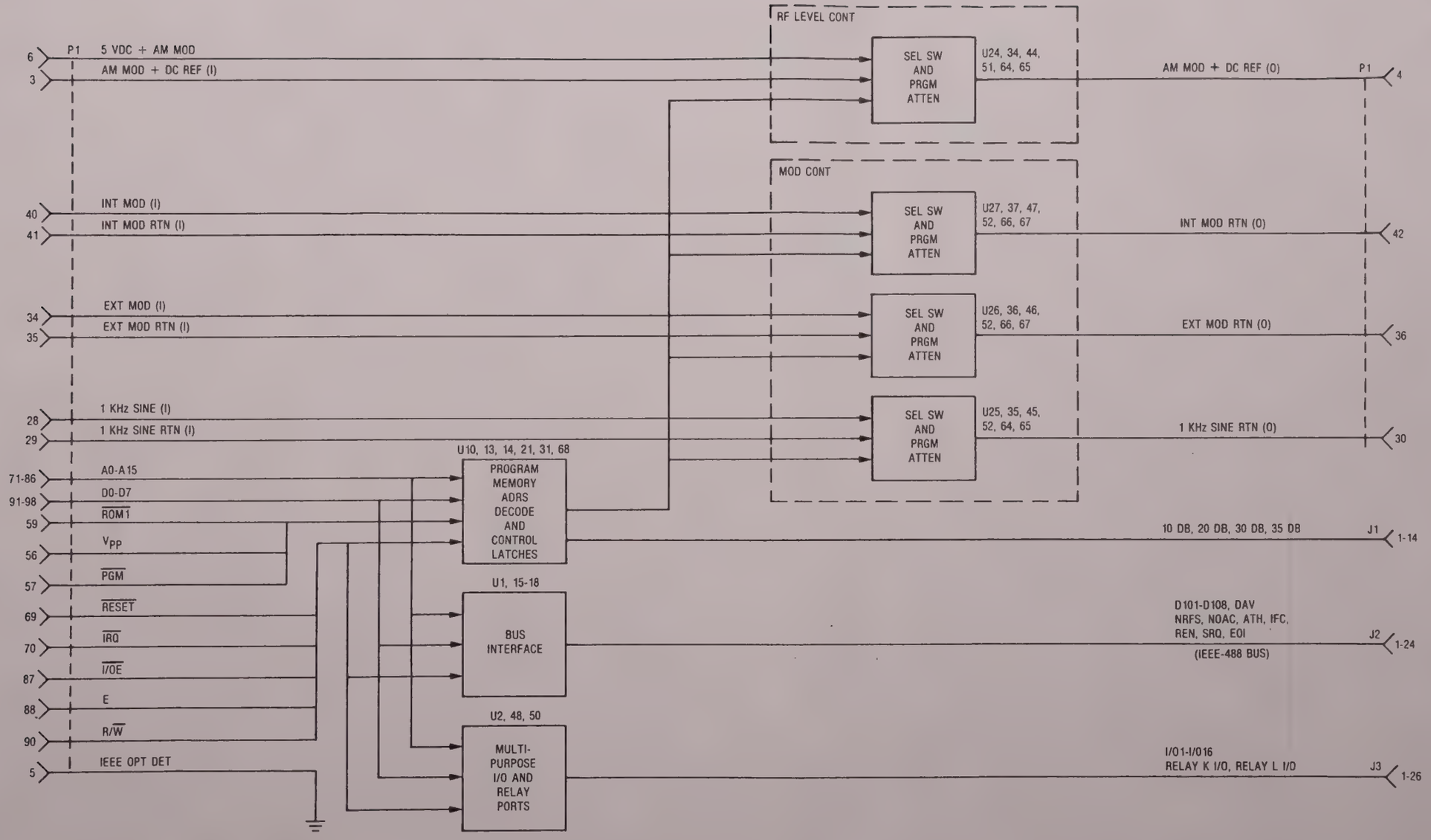

Figure 21-2a. Schematic (Sheet 1 of 2)

NOTES:

1. UNLESS OTHERWISE SPECIFIED
   ALL RESISTORS ARE IN OHMS ±5 PCT, 1/4 WATT(S)
   ALL CAPACITORS ARE IN UF
   ALL INDUCTORS ARE IN MH
   ALL VOLTAGES ARE IN DC
2. PARTIAL REFERENCE DESIGNATIONS ARE SHOWN. FOR COMPLETE DESIGNATION PREFIX WITH 1A13
3. FOR REFERENCE DRAWINGS REFER TO ASSY: 01-P22130E001
   PL01-P22130E001

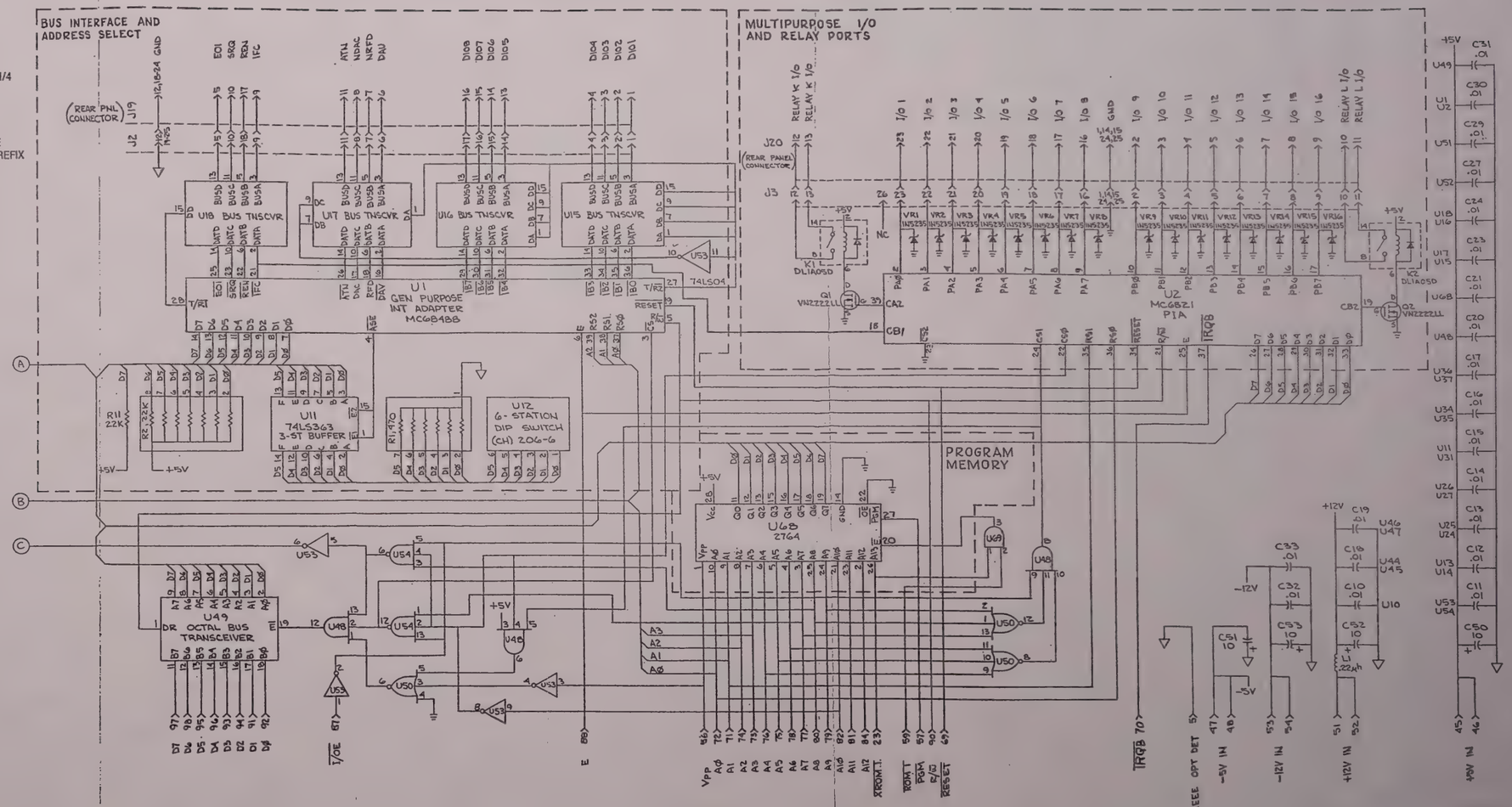

Figure 21-2b. Schematic (Sheet 2 of 2)

REF DES	TYPE	GND	+5V	-5V	+12V	-12V	+33V	NO CONN
D1	MC6848B	1,2,40	20					15,24
U2	MC6821	1,23	20					38,40
U10	UDN6116A	1,8			9			15,16,2
U11	74LS365	8	16					7 THRU 12
U12	206-6		7 THRU 12					6,16
U13	74LS138	8	16					7,9-13
U14	74LS138	5,8	16					
U15	MC3448	4,8,12	16					
U16	MC3448	4,8,12	16					
U17	MC3448	4,8,12,15	16					
U18	MC3448	1,4,7,8,12	9,16					
U21	MC14174	8	1,16					12,15
U24	MC14174	8	1,16					
U25	MC14174	8	1,16					
U26	MC14174	8	1,16					
U27	MC14174	8	1,16					
U31	MC14174	8	1,16					2,5,7,10,12
U34	MC14174	8	1,16					
U35	MC14174	8	1,16					
U36	MC14174	8	1,16					
U37	MC14174	8	1,16					
U44	AD7531	2,3			16			
U45	AD7531	2,3			16			
U46	AD7531	2,3			16			
U47	AD7531	2,3			16			
U48	74LS11	7	3,14					
U49	74LS245	10	20					
U50	74LS27	4,7	14					
U51	MC14053	6,8	16	7				1-5,15
U52	MC14053	6,8	16	7				
U53	74LS09	7	13,14					12
U54	74LS10	7	14,10					
U64	CA3240				8	4		
U65	CA3240				8	4		
U66	CA3240				8	4		
U67	CA3240				8	4		
U68	MCM6876AL	14,22	28					
U69	SN74LS06J	7	14					4-6,8-13

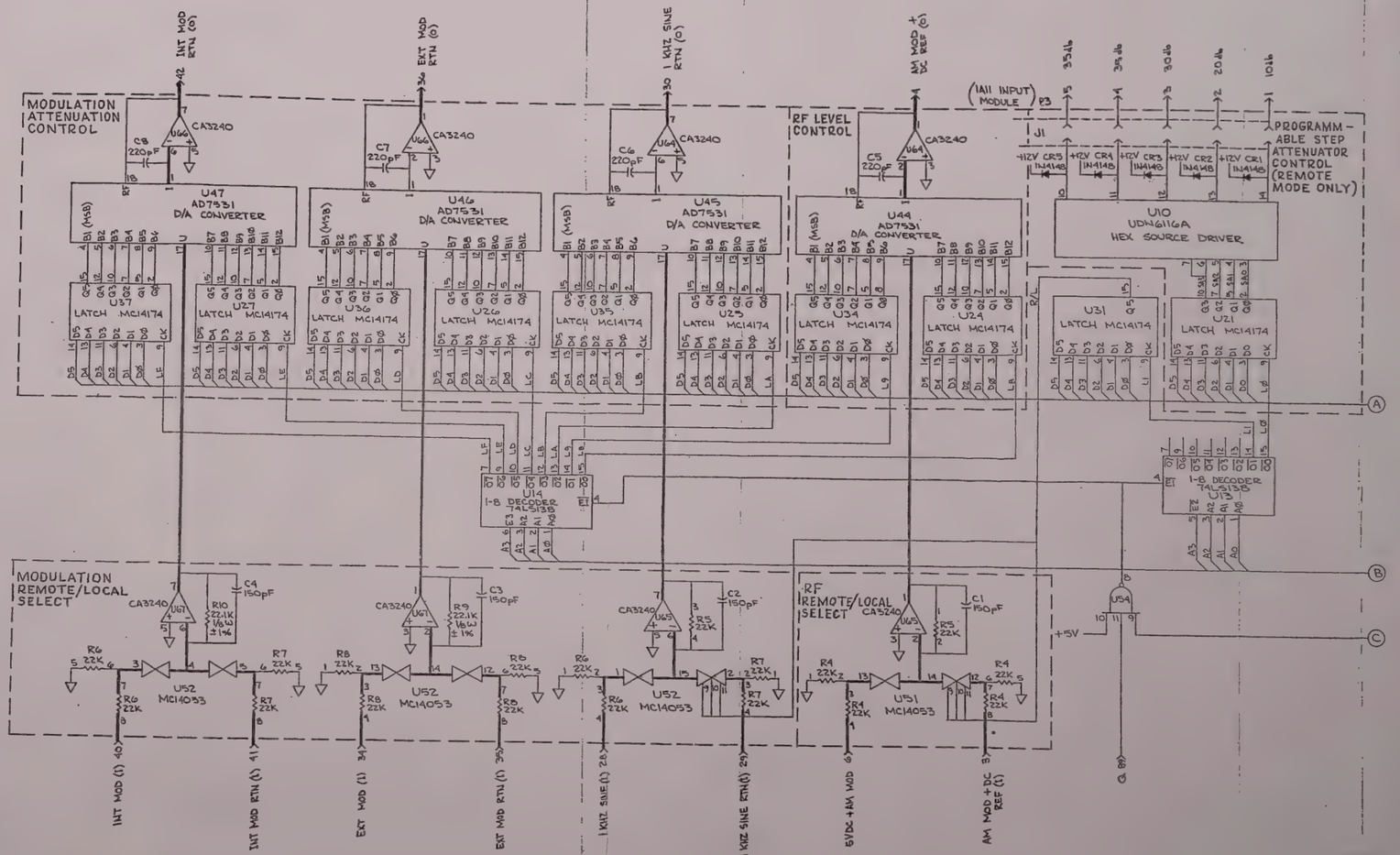

WARNING:
STATIC-SENSITIVE PARTS
HANDLE APPROPRIATELY

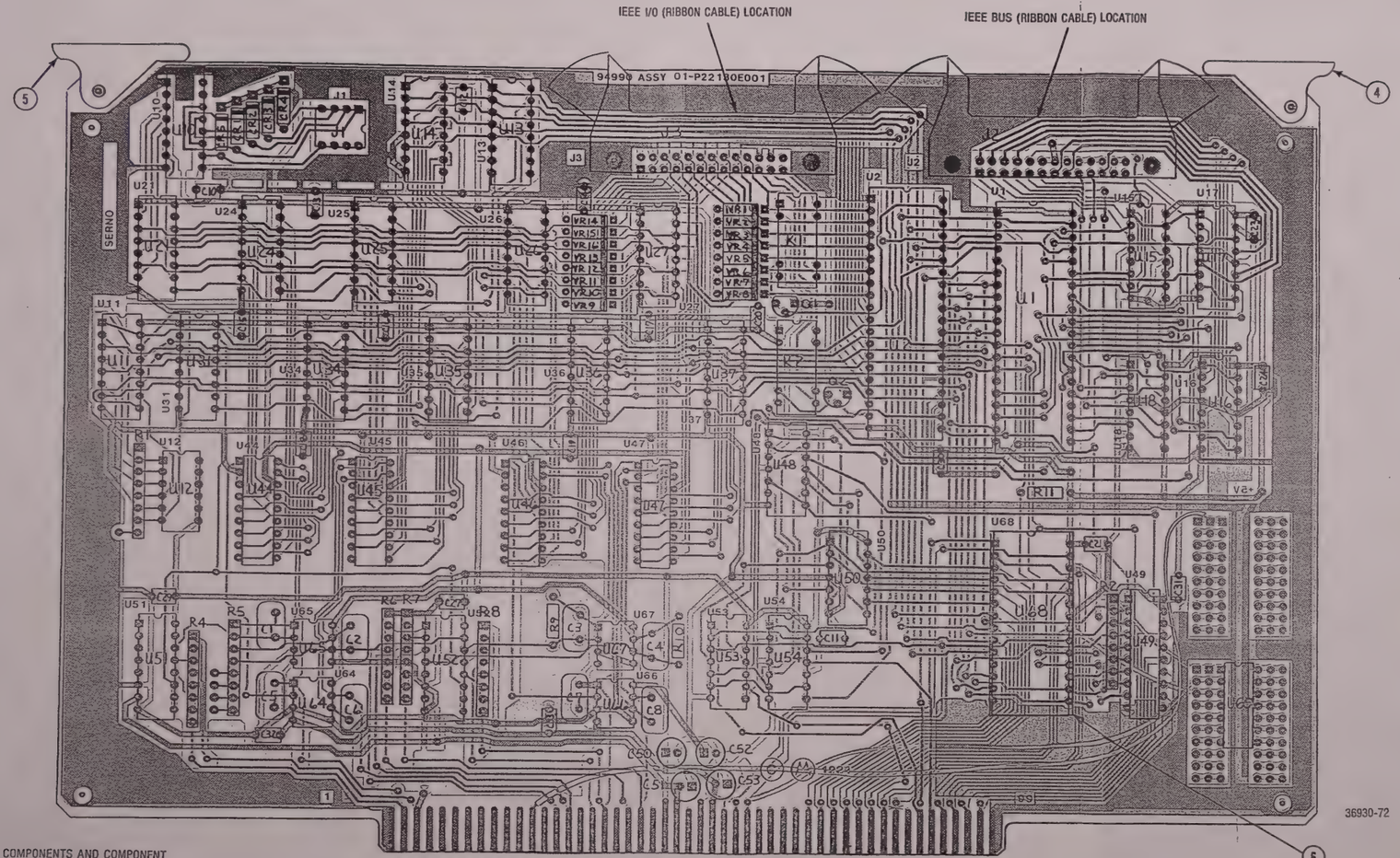

COMPONENTS AND COMPONENT SIDE TRACK SHOWN IN BLACK.
SOLDER-SIDE TRACK SHOWN IN ORANGE

IEEE INTERFACE OPTION

Find No.	Qty. Req.	Part No.	Nomenclature	Part Value
004	1	45-80339B28	CARD EJECTOR	
005	1	45-80339B32	CARD EJECTOR	MARKED
006	1	09-80339B81	SOCKET	28 PIN
C 001	1	21-80369A94	CAPACITOR	150PF-5-500
C 002	1	21-80369A94	CAPACITOR	150PF-5-500
C 003	1	21-80369A94	CAPACITOR	150PF-5-500
C 004	1	21-80369A94	CAPACITOR	150PF-5-500
C 005	1	21-80339B26	CAPACITOR	220PF-5-500
C 006	1	21-80339B26	CAPACITOR	220PF-5-500
C 007	1	21-80339B26	CAPACITOR	220PF-5-500
C 008	1	21-80339B26	CAPACITOR	220PF-5-500
C 010	1	21-80342B09	CAPACITOR	.01UF-20-50
C 011	1	21-80342B09	CAPACITOR	.01UF-20-50
C 012	1	21-80342B09	CAPACITOR	.01UF-20-50
C 013	1	21-80342B09	CAPACITOR	.01UF-20-50
C 014	1	21-80342B09	CAPACITOR	.01UF-20-50
C 015	1	21-80342B09	CAPACITOR	.01UF-20-50
C 016	1	21-80342B09	CAPACITOR	.01UF-20-50
C 017	1	21-80342B09	CAPACITOR	.01UF-20-50
C 018	1	21-80342B09	CAPACITOR	.01UF-20-50
C 019	1	21-80342B09	CAPACITOR	.01UF-20-50
C 020	1	21-80342B09	CAPACITOR	.01UF-20-50
C 021	1	21-80342B09	CAPACITOR	.01UF-20-50
C 023	1	21-80342B09	CAPACITOR	.01UF-20-50
C 024	1	21-80342B09	CAPACITOR	.01UF-20-50
C 027	1	21-80342B09	CAPACITOR	.01UF-20-50
C 029	1	21-80342B09	CAPACITOR	.01UF-20-50
C 030	1	21-80342B09	CAPACITOR	.01UF-20-50
C 031	1	21-80342B09	CAPACITOR	.01UF-20-50
C 032	1	21-80342B09	CAPACITOR	.01UF-20-50
C 033	1	21-80342B09	CAPACITOR	.01UF-20-50
C 050	1	23-80341B15	CAPACITOR	10UF-20-50
C 051	1	23-80341B15	CAPACITOR	10UF-20-50
C 052	1	23-80341B15	CAPACITOR	10UF-20-50
C 053	1	23-80341B15	CAPACITOR	10UF-20-50
CR001	1	48-84463K02	DIODE	
CR002	1	48-84463K02	DIODE	
CR003	1	48-84463K02	DIODE	
CR004	1	48-84463K02	DIODE	
CR005	1	48-84463K02	DIODE	
J 001	1	09-80331A95	SOCKET,SOLDER DIP	8 PIN
J 002	1	28-80343B51	CONNECTOR	26 PIN HEADER
J 003	1	28-80343B51	CONNECTOR	26 PIN HEADER
K 001	1	80-80339B76	RELAY,ELECTRONIC	
K 002	1	80-80339B76	RELAY,ELECTRONIC	
L 001	1	25-80342B79	COIL,TOROID	
Q 001	1	48-80341B23	TRANSISTOR	
Q 002	1	48-80341B23	TRANSISTOR	
R 001	1	51-80343B80	RESISTOR NETWORK	HEX SIP 470
R 002	1	06-80340B11	RESISTOR NETWORK	HEX SIP 22K
R 004	1	51-80368A78	RESISTOR NETWORK	QUAD SIP 22K
R 005	1	51-80368A78	RESISTOR NETWORK	QUAD SIP 22K
R 006	1	51-80368A78	RESISTOR NETWORK	QUAD SIP 22K
R 007	1	51-80368A78	RESISTOR NETWORK	QUAD SIP 22K
R 008	1	51-80368A78	RESISTOR NETWORK	QUAD SIP 22K
R 009	1	06-10621D25	RESISTOR	22.1K-1-1/4
R 010	1	06-10621D25	RESISTOR	22.1K-1-1/4
R 011	1	06-11009C81	RESISTOR	22K-5-1/4
U 001	1	51-80340B22	INTEGRATED CIRCUIT	
U 002	1	51-82807K20	INTEGRATED CIRCUIT	
U 010	1	51-80346A83	INTEGRATED CIRCUIT	
U 011	1	51-80340B82	INTEGRATED CIRCUIT	
U 012	1	40-80369A07	SWITCH,6 STATION	
U 013	1	51-84561L41	INTEGRATED CIRCUIT	
U 014	1	51-84561L41	INTEGRATED CIRCUIT	
U 015	1	51-80340B20	INTEGRATED CIRCUIT	
U 016	1	51-80340B20	INTEGRATED CIRCUIT	
U 017	1	51-80340B20	INTEGRATED CIRCUIT	
U 018	1	51-80340B20	INTEGRATED CIRCUIT	
U 021	1	51-83627M89	INTEGRATED CIRCUIT	
U 024	1	51-83627M89	INTEGRATED CIRCUIT	
U 025	1	51-83627M89	INTEGRATED CIRCUIT	
U 026	1	51-83627M89	INTEGRATED CIRCUIT	
U 027	1	51-83627M89	INTEGRATED CIRCUIT	
U 031	1	51-83627M89	INTEGRATED CIRCUIT	
U 034	1	51-83627M89	INTEGRATED CIRCUIT	
U 035	1	51-83627M89	INTEGRATED CIRCUIT	
U 036	1	51-83627M89	INTEGRATED CIRCUIT	
U 037	1	51-83627M89	INTEGRATED CIRCUIT	
U 044	1	51-80345A98	INTEGRATED CIRCUIT	AD7531JPN SCREENED
U 045	1	51-80345A98	INTEGRATED CIRCUIT	AD7531JPN SCREENED

Figure 21-3. Printed Wiring Board Assembly and Parts List

IEEE INTERFACE OPTION (Cont)

Find No.	Qty. Req.	Part No.	Nomenclature	Part Value
U 046	1	51-80345A98	INTEGRATED CIRCUIT	AD7531JPN SCREENED
U 047	1	51-80345A98	INTEGRATED CIRCUIT	AD7531JPN SCREENED
U 048	1	51-84561L44	INTEGRATED CIRCUIT	
U 049	1	51-82609M57	INTEGRATED CIRCUIT	
U 050	1	51-84561L38	INTEGRATED CIRCUIT	
U 051	1	51-05467G01	INTEGRATED CIRCUIT	
U 052	1	51-05467G01	INTEGRATED CIRCUIT	
U 053	1	51-84561L03	INTEGRATED CIRCUIT	
U 054	1	51-84561L08	INTEGRATED CIRCUIT	
U 064	1	51-80345A04	INTEGRATED CIRCUIT	CA3240E SCREENED
U 065	1	51-80345A04	INTEGRATED CIRCUIT	CA3240E SCREENED
U 066	1	51-80345A04	INTEGRATED CIRCUIT	CA3240E SCREENED
U 067	1	51-80345A04	INTEGRATED CIRCUIT	CA3240E SCREENED
U 068	1	51-90019B01	INTEGRATED CIRCUIT	EPROM
U 069	1	51-84561L07	INTEGRATED CIRCUIT	
VR001	1	RG-1N5235B	DIODE,ZENER	
VR002	1	RG-1N5235B	DIODE,ZENER	
VR003	1	RG-1N5235B	DIODE,ZENER	
VR004	1	RG-1N5235B	DIODE,ZENER	
VR005	1	RG-1N5235B	DIODE,ZENER	
VR006	1	RG-1N5235B	DIODE,ZENER	
VR007	1	RG-1N5235B	DIODE,ZENER	
VR008	1	RG-1N5235B	DIODE,ZENER	
VR009	1	RG-1N5235B	DIODE,ZENER	
VR010	1	RG-1N5235B	DIODE,ZENER	
VR011	1	RG-1N5235B	DIODE,ZENER	
VR012	1	RG-1N5235B	DIODE,ZENER	
VR013	1	RG-1N5235B	DIODE,ZENER	
VR014	1	RG-1N5235B	DIODE,ZENER	
VR015	1	RG-1N5235B	DIODE,ZENER	
VR016	1	RG-1N5235B	DIODE,ZENER	

IEEE Interface Kit

001	1	RTC-1013A	OPTION'B'BD ASSY(A13)	
002	1	RTL-1023A	RF INPUT MODULE ASSY(A17)	
003	1	30-80344B14	CABLE ASSEMBLY	A17AT1 TO A13J1
004	1	30-80343B92	CABLE ASSEMBLY(IEEE BUS)	
005	1	30-80343B93	CABLE ASSEMBLY(IEEE I/O)	
008	4	04-80335A99	WASHER	.156
011	1	35-80335A88	KNOB, SKIRTED	
014	2	03-80343B58	JACKSOCKET ASSEMBLY	

Front Cover IEEE Kit

002	1	30-80336A36	CORD, LINE	
003	1	TEKA-24A	ANTENNA	
004	1	15-80342B27	COVER	CRT-SUN
005	1	RTL-4011A	SCOPE PROBE	
006	1	RTM-4000B	TEST MIKE	
007	1	RTL-4055B	WATTMETER ADAPTER	
008	1	54-80338A82	WARRANTY CARD	
009	1	68-80309A54	PPR CARD	

IEEE Accessory Kit

001	1	15-10811A08	CONNECTOR,4 PIN
002	1	15-10812A01	CLAMP

21-8

Find No.	Qty. Req.	Part No.	Nomenclature	Part Value

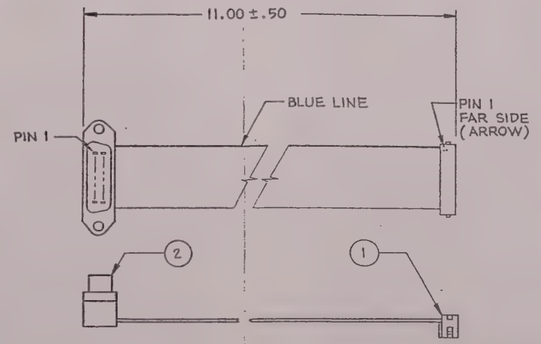

36930-134

004

Cable Assembly, IEEE Bus
30-80343B92

001	1	09-80343B52	SOCKET, CLOSED END	26 PIN
002	1	09-80343B49	CONNECTOR, FEMALE	24 PIN

Find No.	Qty. Req.	Part No.	Nomenclature	Part Value

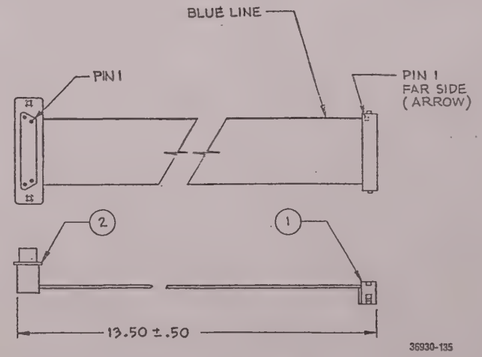

36930-135

005

Cable Assembly, IEEE I/O
30-80343B93

001	1	09-80343B52	SOCKET, CLOSED END	26 PIN
002	1	09-80343B50	SOCKET	25 PIN

Find No.	Qty. Req.	Part No.	Nomenclature	Part Value

IEEE Connector Kit

001	1	RTC-4047A	PRINTED WIRING BOARD ASSY	JUMPER CARD
006	2	04-80335A99	WASHER	.156

001

Jumper Card (Option B)
RTC-4047A

004	1	45-80339B28	CARD EJECTOR	
005	1	45-80339B31	CARD EJECTOR	MARKED
006	3	30-80344B18	JUMPER,WIRE	

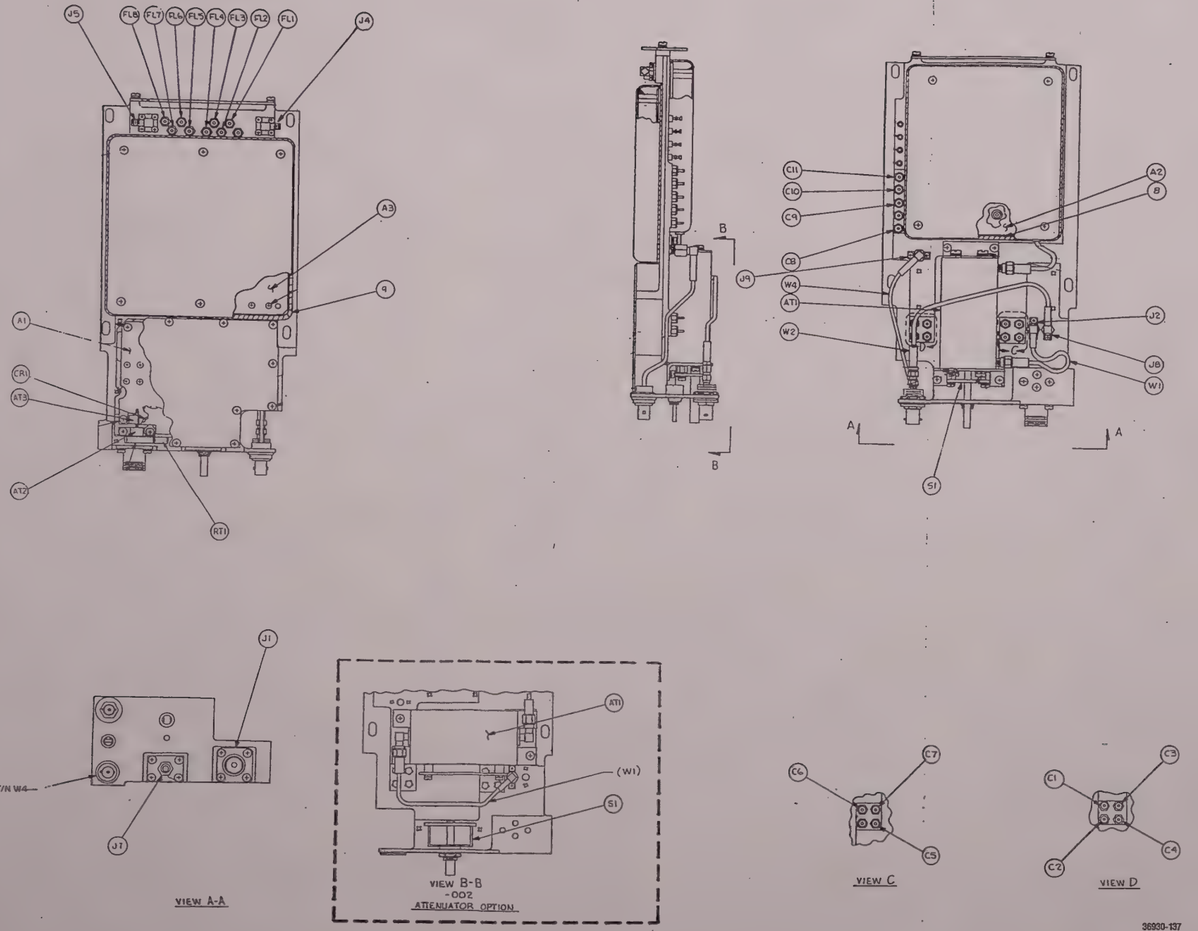

RF INPUT MODULE
REMOTE INTERFACE OPTION

Find No.	Qty. Req.	Part No.	Nomenclature	Part Value
008	1	32-80342B94	GASKET, EMI	
009	1	32-80342B95	GASKET, EMI	
A 001	1	RTL-4158A	WATT METER ASSY(A17A1)	
A 002	1	RTL-4156A	WIDE BND AMPL ASSY(A17A2)	
A 003	1	RTL-4157A	DUPLEX GEN ASSY(A17A3)	
AT001	1	01-80343B84	ATTENUATOR	
AT002	1	17-80377A95	ATTENUATOR, POWER	
AT003	1	01-80343B81	ATTENUATOR, 16DB	
C 001	1	21-80342B51	CAPACITOR	5000PF-6MV-500
C 002	1	21-80342B51	CAPACITOR	5000PF-6MV-500
C 003	1	21-80342B51	CAPACITOR	5000PF-6MV-500
C 004	1	21-80342B51	CAPACITOR	5000PF-6MV-500
C 005	1	21-80342B51	CAPACITOR	5000PF-6MV-500
C 006	1	21-80342B51	CAPACITOR	5000PF-6MV-500
C 007	1	21-80342B51	CAPACITOR	5000PF-6MV-500
C 008	1	21-80342B51	CAPACITOR	5000PF-6MV-500
C 009	1	21-80342B51	CAPACITOR	5000PF-6MV-500
C 010	1	21-80342B51	CAPACITOR	5000PF-6MV-500
C 011	1	21-80342B51	CAPACITOR	5000PF-6MV-500
CR001	1	48-87543C01	DIODE	
FL001	1	91-80342B25	FILTER	
FL002	1	91-80342B25	FILTER	
FL003	1	91-80342B25	FILTER	
FL004	1	91-80342B25	FILTER	
FL005	1	91-80342B25	FILTER	
FL006	1	91-80342B25	FILTER	
FL007	1	91-80342B25	FILTER	
FL008	1	91-80342B25	FILTER	
FL009	1	91-80342B25	FILTER	
FL010	1	91-80342B25	FILTER	
FL011	1	91-80342B25	FILTER	
FL012	1	91-80342B25	FILTER	
J 001	1	28-80342B87	CONNECTOR, MODIFIED	
J 002	1	28-80342B88	CONNECTOR	MODIFIED
J 004	1	28-80342B89	CONNECTOR	MODIFIED
J 005	1	28-80342B89	CONNECTOR	MODIFIED
J 007	1	09-80331A70	CONNECTOR	PHONE JACK
J 008	1	28-80342B88	CONNECTOR	MODIFIED
J 009	1	28-80342B88	CONNECTOR	MODIFIED
J 010	1	09-80340B39	CONNECTOR	
R 003	1	06-00185A19	RESISTOR	56-5-1/8—
RT001	1	06-83600K05	THERMISTOR	
S 001	1	40-80369A08	WAFER SWITCH, 14 POS	
S 002	1	40-80335A80	SWITCH, TOGGLE	SPDT
W 001	1	30-80344B06	CABLE ASSEMBLY-W1	
W 002	1	30-80344B08	CABLE ASSEMBLY-W2	ANTENNA/A1
W 004	1	30-80344B09	CABLE ASSEMBLY-W4	
W001			**Cable Assembly (W1) 30-80344B06**	
P 001	1	09-80331A75	CONNECTOR	
P 002	1	09-80343B86	CONNECTOR	
W002			**Cable Assembly (W2) 30-80344B08**	
P 002	1	09-80331A75	CONNECTOR	
W004			**Cable Assembly (W4, Duplex/A3) 30-80344B09**	
J 005	1	28-80342B90	CONNECTOR, BNC	
P 001	1	09-80331A75	CONNECTOR	

RF INPUT MODULE IEEE/REMOTE INTERFACE OPTIONS

Figure 21-4. Assembly and Parts List

ure 21-5b. Schematic (sheet 2 of 6)

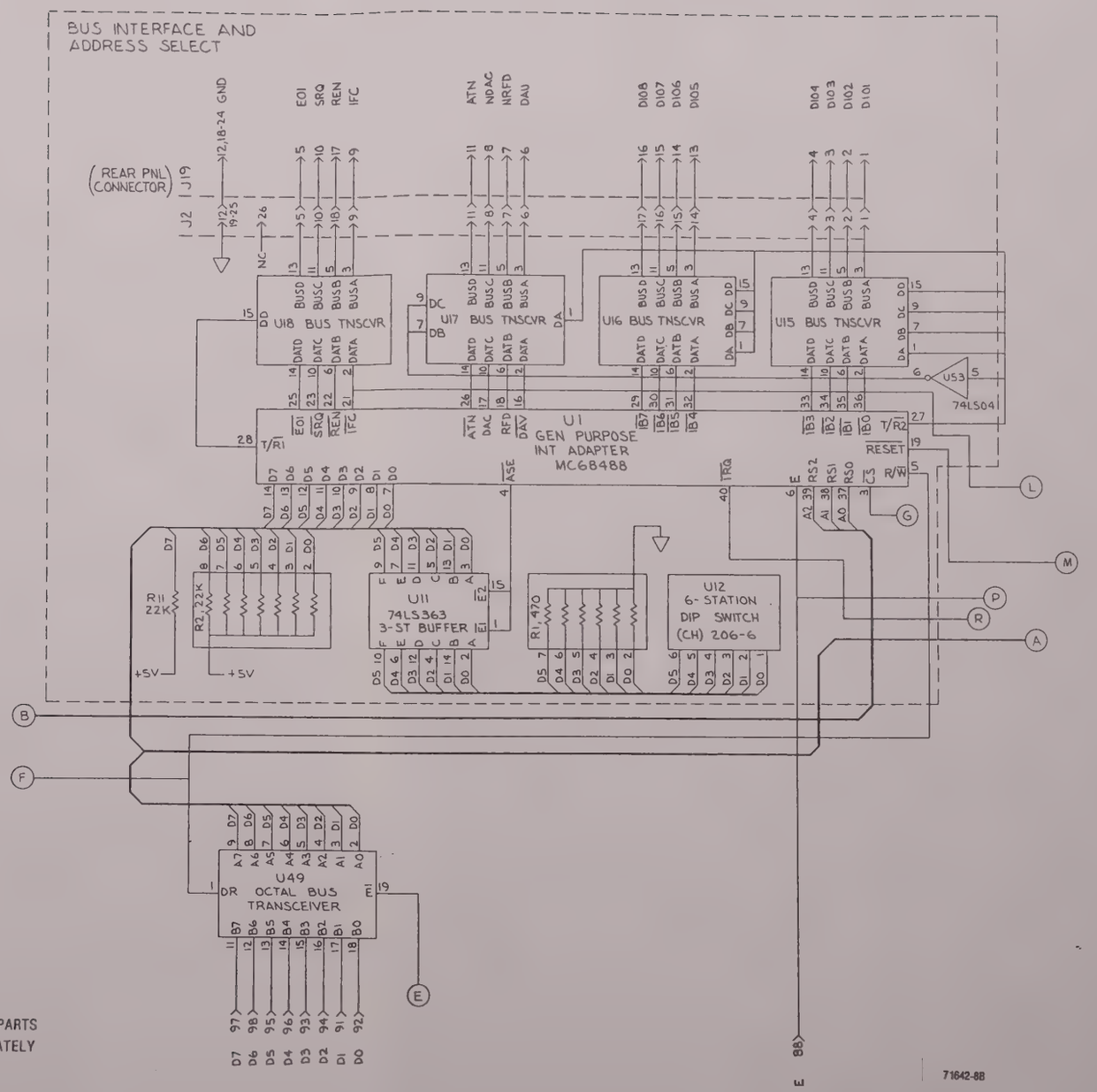

WARNING:
STATIC-SENSITIVE PARTS
HANDLE APPROPRIATELY

Figure 21-5a. Schematic (sheet 1 of 6)

NOTES

1. UNLESS OTHERWISE SPECIFIED
   ALL RESISTORS ARE IN OHMS ±5 PCT, 1/4 WATT
   ALL CAPACITORS ARE IN UF
   ALL VOLTAGES ARE IN DC
2. PARTIAL REFERENCE DESIGNATIONS ARE SHOWN FOR COMPLETE DESIGNATIONS PREFIX WITH A1A13
3. FOR REFERENCE DRAWINGS REFER TO
4. BOARD IS LAYED OUT TO NORMALLY BE PLUGGED INTO A13 SLOT, HOWEVER, IT MAY BE MADE COMPATIBLE WITH THE A12 SLOT BY CUTTING THE TRACK BETWEEN E1 AND E2, E4 AND E5, E7 AND E8, E10 AND E11, E13 AND E14, E16 AND E17 THEN ADD JUMPERS FROM E3 TO E2, E6 TO E5, E9 TO E8, E12 TO E10, E15 TO E13, E18 TO E16

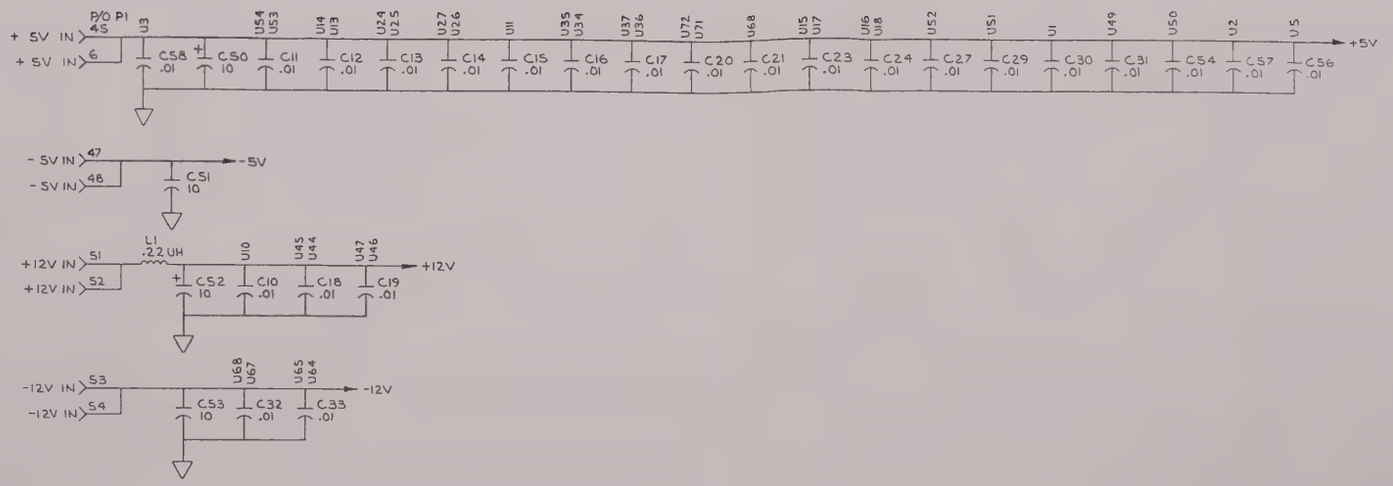

REF DES	TYPE	GND	+5V	-5V	+12V	-12V	NO CONN
U1	MC68488	1, 2, 40	20				15, 24
U2	MC6821	1	20, 22, 24				38, 40
U3	R65C51	1,16	2,15				5
U4	MC1488	7			14	1	4, 5, 6
U5	MC1489	7	14				2, 5, 8, 9, 10, 12
U10	UDN6116A	1, 8			9		2, 15, 16
U11	74LS365	8	16				
U12	206-6		7-12				
U13	74LS138	8	6, 16				7, 9-13, 14
U14	74LS138	5, 8	16				
U15	MC3448	4, 8, 12	16				
U16	MC3448	4, 8, 12	16				
U17	MC3448	4, 8, 12, 15	16				
U18	MC3448	1, 4, 7, 8, 12	9, 16				
U21	MC14174	8	1, 16				12, 15
U24	MC14174	8	1, 16				
U25	MC14174	8	1, 16				
U26	MC14174	8	1, 16				
U27	MC14174	8	1, 16				
U34	MC14174	8	1, 16				
U35	MC14174	8	1, 16				
U36	MC14174	8	1, 16				
U37	MC14174	8	1, 16				

REF DES	TYPE	GND	+5V	-5V	+12V	-12V	NO CONN
U44	AD7531	2, 3			16		
U45	AD7831	2, 3			16		
U46	AD7531	2, 3			16		
U47	AD7531	2, 3			16		
U49	74LS245	10	20				
U50	74LS87	7, 11	14				
U51	MC14053	8, 8	16	7			1-5, 15
U52	MC14053	8, 8	16	7			
U53	74LS04	7	14				
U54	74LS10	7	3, 14				
U64	CA3240				8	4	
U65	CA3240				8	4	
U66	CA3240				8	4	
U67	CA3240				8	4	
U68	MCM68764L	14	28				
U70	HM6116	12, 20	24		9		
U71	74LS138	8	6, 16			7, 9, 10	
U72	MC14599	2, 9	18			1, 12-15, 17	
U73	74LS02	7	14				8-13

WARNING:
STATIC-SENSITIVE PARTS
HANDLE APPROPRIATELY

SPARES

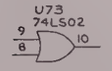

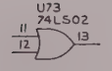

71642-8A

Figure 21-5c. Schematic (sheet 3 of 6)

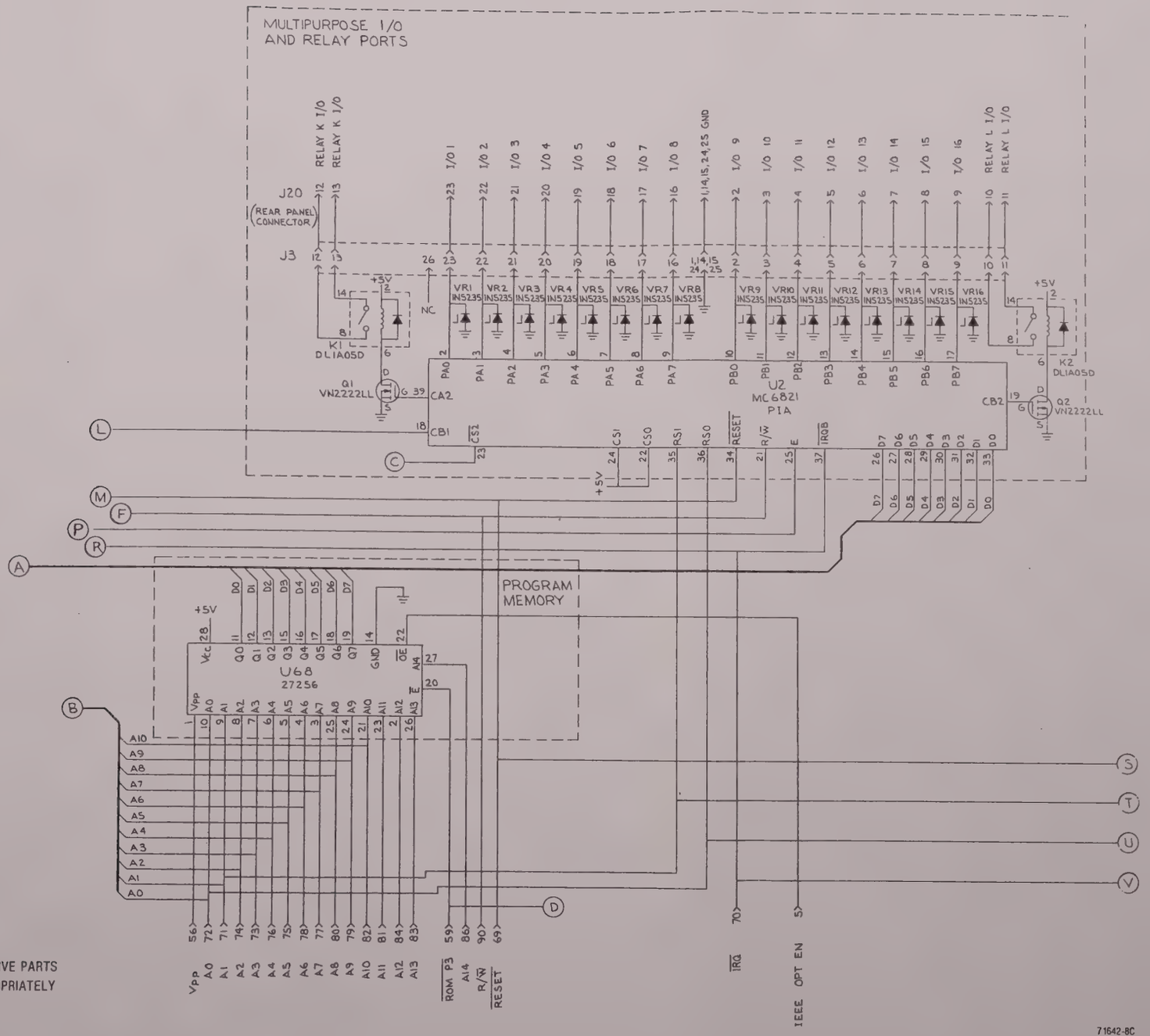

71642-8C

WARNING:
STATIC-SENSITIVE PARTS
HANDLE APPROPRIATELY

Figure 21-5d. Schematic (sheet 4 of 6)

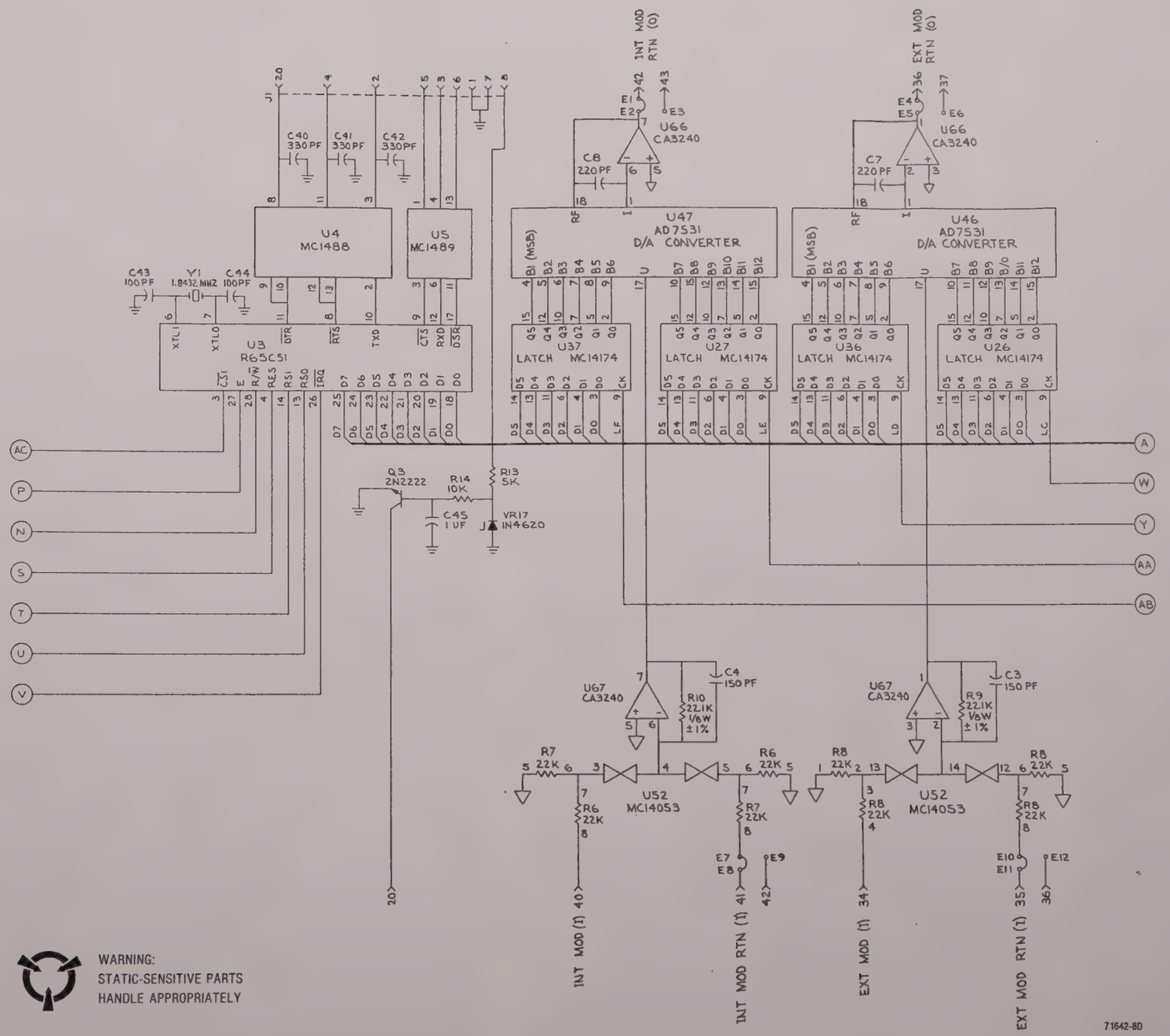

Figure 21-5f. Schematic (sheet 6 of 6)

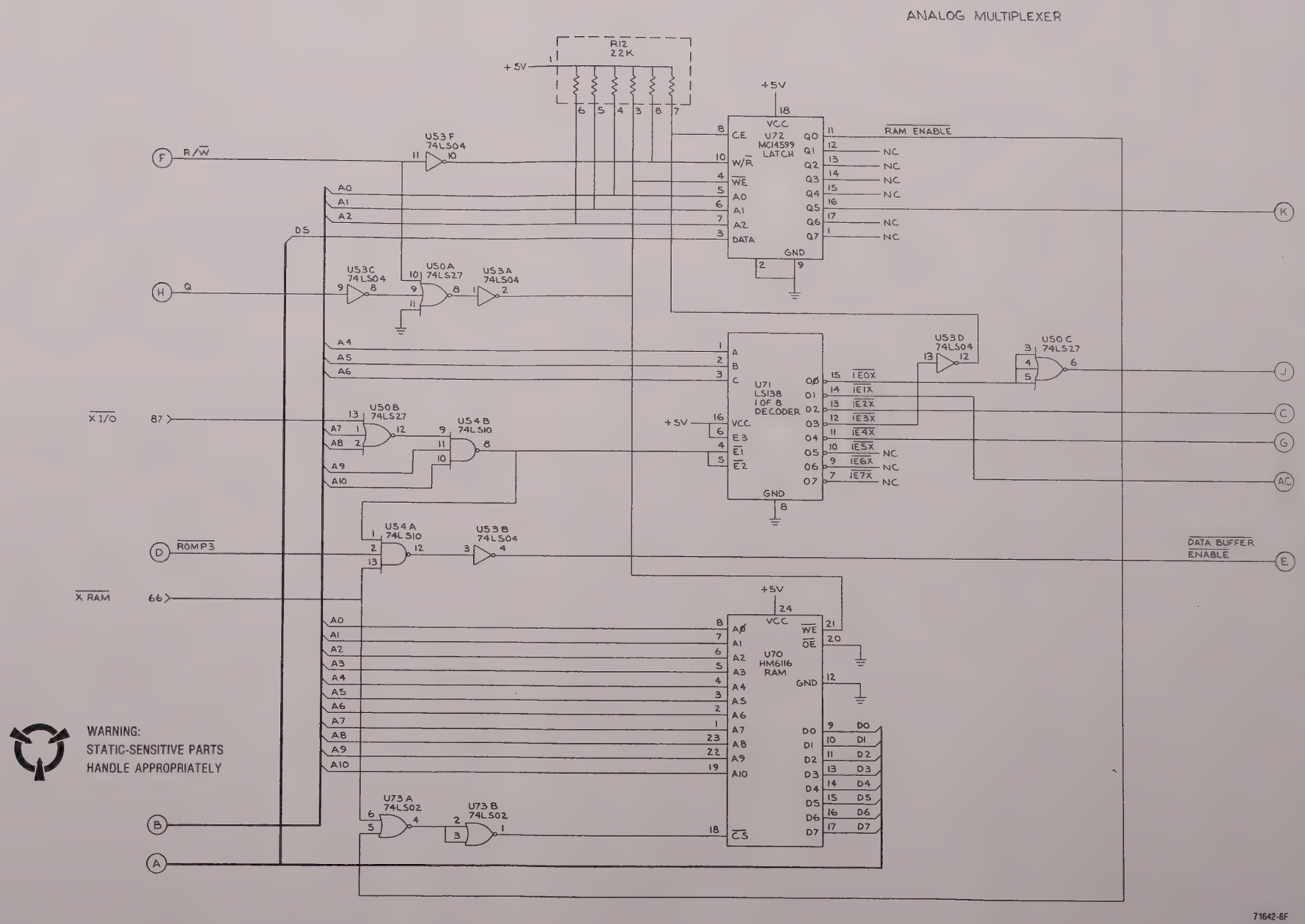

Figure 21-5e. Schematic (sheet 5 of 6)

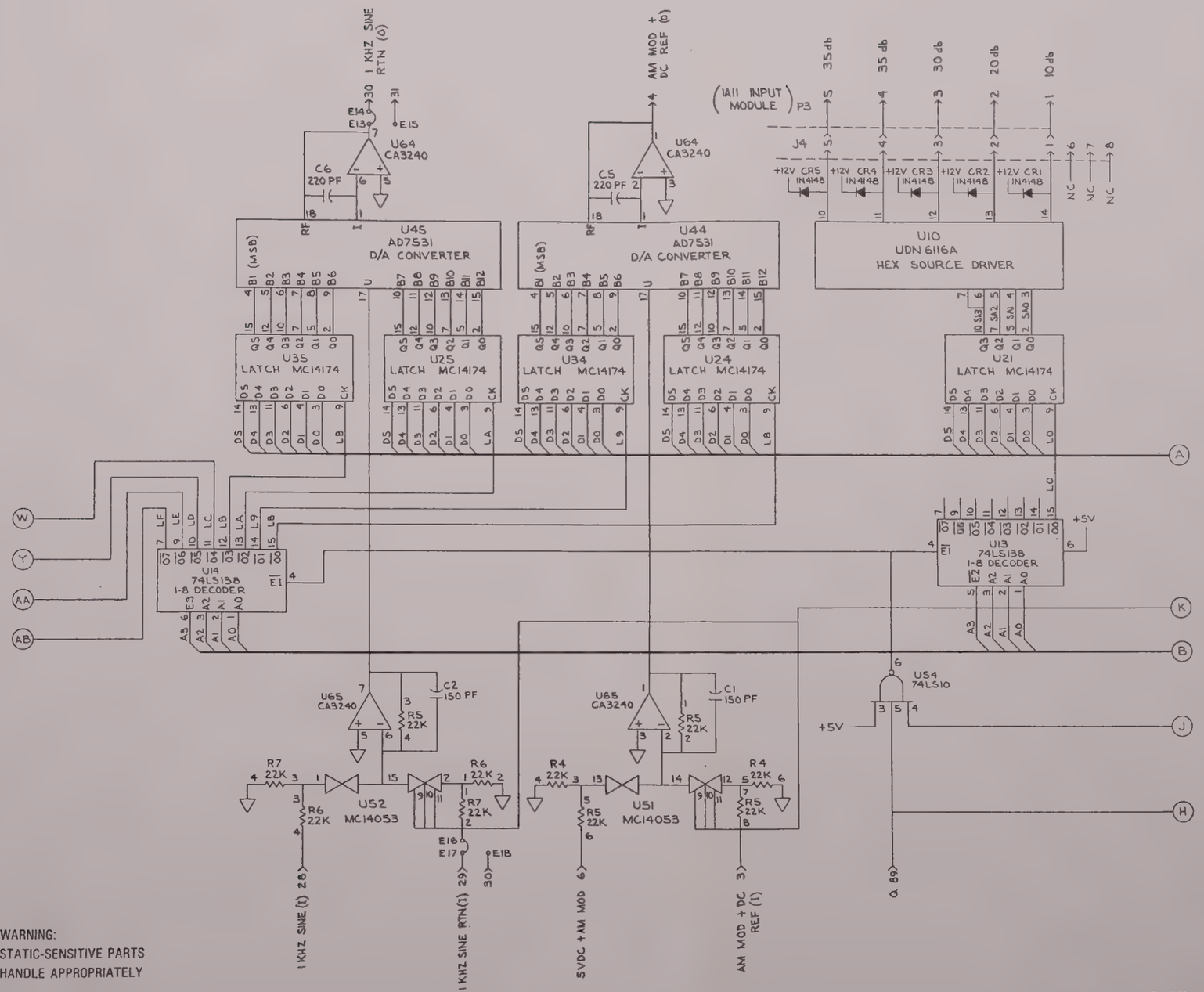

WARNING:
STATIC-SENSITIVE PARTS
HANDLE APPROPRIATELY

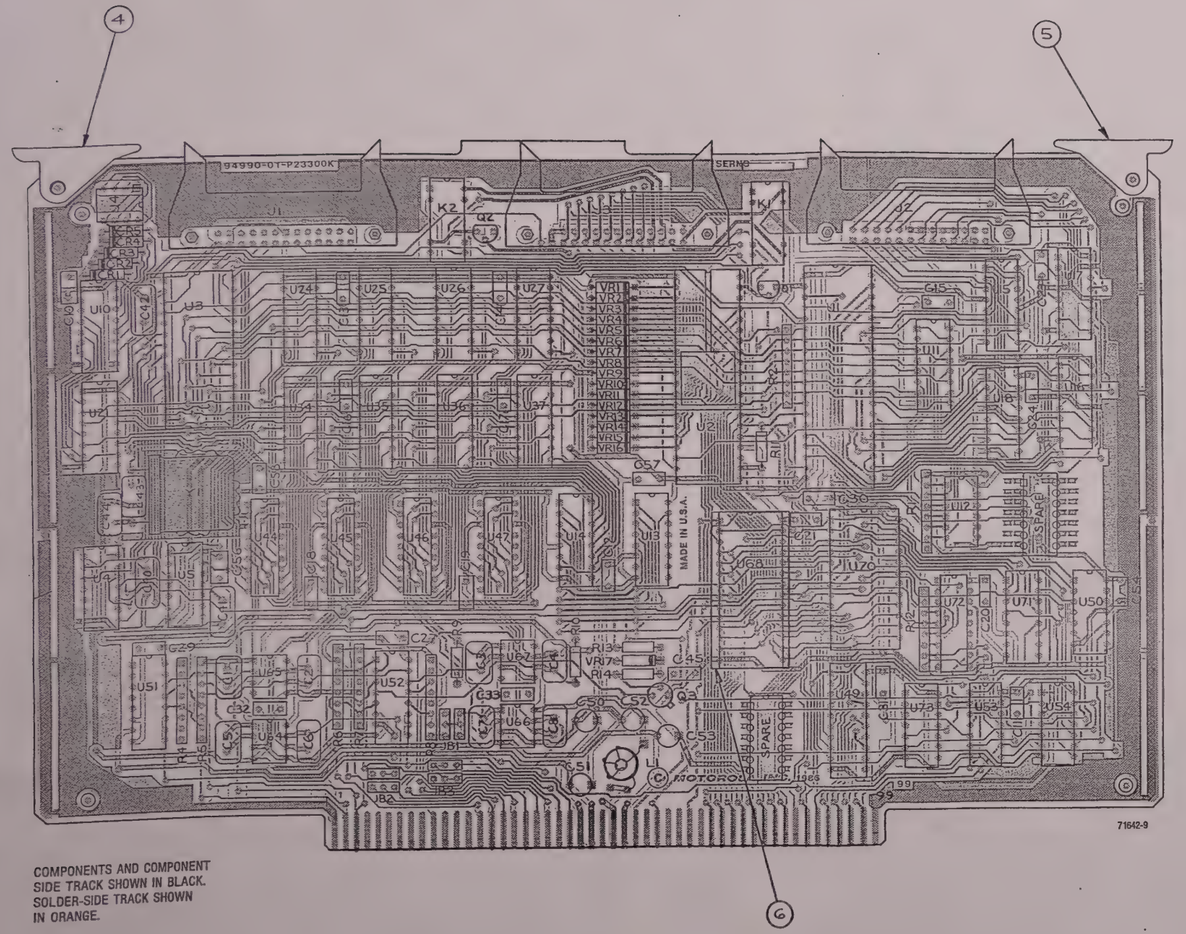

COMPONENTS AND COMPONENT SIDE TRACK SHOWN IN BLACK. SOLDER-SIDE TRACK SHOWN IN ORANGE.

Find No.	Qty. Req.	Part No.	Nomenclature	Part Value
004	1	45-80339B28	CARD EJECTOR	
005	1	45-80339B32	CARD EJECTOR	MARKED
006	1	09-80339B81	SOCKET	28 PIN
C 001	1	21-80369A94	CAPACITOR	150PF-5-500
C 002	1	21-80369A94	CAPACITOR	150PF-5-500
C 003	1	21-80369A94	CAPACITOR	150PF-5-500
C 004	1	21-80369A94	CAPACITOR	150PF-5-500
C 005	1	21-80339B26	CAPACITOR	220PF-5-500
C 006	1	21-80339B26	CAPACITOR	220PF-5-500
C 007	1	21-80339B26	CAPACITOR	220PF-5-500
C 008	1	21-80339B26	CAPACITOR	220PF-5-500
C 010	1	21-80342B09	CAPACITOR	.01UF-20-50
C 011	1	21-80342B09	CAPACITOR	.01UF-20-50
C 012	1	21-80342B09	CAPACITOR	.01UF-20-50
C 013	1	21-80342B09	CAPACITOR	.01UF-20-50
C 014	1	21-80342B09	CAPACITOR	.01UF-20-50
C 015	1	21-80342B09	CAPACITOR	.01UF-20-50
C 016	1	21-80342B09	CAPACITOR	.01UF-20-50
C 017	1	21-80342B09	CAPACITOR	.01UF-20-50
C 018	1	21-80342B09	CAPACITOR	.01UF-20-50
C 019	1	21-80342B09	CAPACITOR	.01UF-20-50
C 020	1	21-80342B09	CAPACITOR	.01UF-20-50
C 021	1	21-80342B09	CAPACITOR	.01UF-20-50
C 023	1	21-80342B09	CAPACITOR	.01UF-20-50
C 024	1	21-80342B09	CAPACITOR	.01UF-20-50
C 027	1	21-80342B09	CAPACITOR	.01UF-20-50
C 029	1	21-80342B09	CAPACITOR	.01UF-20-50
C 030	1	21-80342B09	CAPACITOR	.01UF-20-50
C 031	1	21-80342B09	CAPACITOR	.01UF-20-50
C 032	1	21-80342B09	CAPACITOR	.01UF-20-50
C 033	1	21-80342B09	CAPACITOR	.01UF-20-50
C 040	1	21-80339B19	CAPACITOR	330PF-5-100
C 041	1	21-80339B19	CAPACITOR	330PF-5-100
C 042	1	21-80339B19	CAPACITOR	330PF-5-100
C 043	1	21-80341B45	CAPACITOR	100PF-5-50
C 044	1	21-80341B45	CAPACITOR	100PF-5-50
C 045	1	21-80342B46	CAPACITOR	1UF-20-50
C 050	1	23-80341B15	CAPACITOR	10UF-20-50
C 051	1	23-80341B15	CAPACITOR	10UF-20-50
C 052	1	23-80341B15	CAPACITOR	10UF-20-50
C 053	1	23-80341B15	CAPACITOR	10UF-20-50
C 054	1	21-80342B09	CAPACITOR	.01UF-20-50
C 056	1	21-80342B09	CAPACITOR	.01UF-20-50
C 057	1	21-80342B09	CAPACITOR	.01UF-20-50
C 058	1	21-80342B09	CAPACITOR	.01UF-20-50
CR001	1	48-84463K02	DIODE	
CR002	1	48-84463K02	DIODE	
CR003	1	48-84463K02	DIODE	
CR004	1	48-84463K02	DIODE	
CR005	1	48-84463K02	DIODE	
J 001	1	09-80331A95	SOCKET,SOLDER DIP	8 PIN
J 002	1	28-80343B51	CONNECTOR	26 PIN HEADER
J 003	1	28-80343B51	CONNECTOR	26 PIN HEADER
J 004	1	09-80331A95	SOCKET, SOLDER DIP	
K 001	1	80-80339B76	RELAY,ELECTRONIC	
K 002	1	80-80339B76	RELAY,ELECTRONIC	
L 001	1	25-80342B79	COIL,TOROID	
Q 001	1	48-80341B23	TRANSISTOR	
Q 002	1	48-80341B23	TRANSISTOR	
Q 003	1	48-80341B23	TRANSISTOR	
R 001	1	51-80343B80	RESISTOR NETWORK	HEX SIP 470
R 002	1	06-80340B11	RESISTOR NETWORK	HEX SIP 22K
R 004	1	51-80368A78	RESISTOR NETWORK	QUAD SIP 22K
R 005	1	51-80368A78	RESISTOR NETWORK	QUAD SIP 22K
R 006	1	51-80368A78	RESISTOR NETWORK	QUAD SIP 22K
R 007	1	51-80368A78	RESISTOR NETWORK	QUAD SIP 22K
R 008	1	51-80368A78	RESISTOR NETWORK	QUAD SIP 22K
R 009	1	06-10621D25	RESISTOR	22.1K-1-1/4
R 010	1	06-10621D25	RESISTOR	22.1K-1-1/4
R 011	1	06-11009C61	RESISTOR	22K-5-1/4
R 012	1	51-80868A78	RESISTOR	QUAD SIP 22K
R 013	1	06-11009C66	RESISTOR	5.1K-5-1/4
R 014	1	06-1109C73	RESISTOR	10K-5-1/4
U 001	1	51-80340B22	INTEGRATED CIRCUIT	
U 002	1	51-82807K20	INTEGRATED CIRCUIT	
U 003	1	51-80375B53	INTEGRATED CIRCUIT	
U 004	1	51-80375B54	INTEGRATED CIRCUIT	
U 005	1	51-80375B55	INTEGRATED CIRCUIT	
U 010	1	51-80346A63	INTEGRATED CIRCUIT	
U 011	1	51-80340B82	INTEGRATED CIRCUIT	
U 012	1	40-80369A07	SWITCH,8 STATION	

Find No.	Qty. Req.	Part No.	Nomenclature	Part Value
U 013	1	51-84581L41	INTEGRATED CIRCUIT	
U 014	1	51-84561L41	INTEGRATED CIRCUIT	
U 015	1	51-80340B20	INTEGRATED CIRCUIT	
U 016	1	51-80340B20	INTEGRATED CIRCUIT	
U 017	1	51-80340B20	INTEGRATED CIRCUIT	
U 018	1	51-80340B20	INTEGRATED CIRCUIT	
U 021	1	51-83627M89	INTEGRATED CIRCUIT	
U 024	1	51-83627M89	INTEGRATED CIRCUIT	
U 025	1	51-83627M89	INTEGRATED CIRCUIT	
U 026	1	51-83627M89	INTEGRATED CIRCUIT	
U 027	1	51-83627M89	INTEGRATED CIRCUIT	
U 034	1	51-83627M89	INTEGRATED CIRCUIT	
U 035	1	51-83627M89	INTEGRATED CIRCUIT	
U 036	1	51-83627M89	INTEGRATED CIRCUIT	
U 037	1	51-83627M89	INTEGRATED CIRCUIT	
U 044	1	51-80345A98	INTEGRATED CIRCUIT	AD7531JPN SCREENED
U 045	1	51-80345A98	INTEGRATED CIRCUIT	AD7531JPN SCREENED
U 046	1	51-80345A98	INTEGRATED CIRCUIT	AD7531JPN SCREENED
U 047	1	51-80345A98	INTEGRATED CIRCUIT	AD7531JPN SCREENED
U 049	1	51-82609M57	INTEGRATED CIRCUIT	
U 050	1	51-84561L38	INTEGRATED CIRCUIT	
U 051	1	51-05467G01	INTEGRATED CIRCUIT	
U 052	1	51-05467G01	INTEGRATED CIRCUIT	
U 053	1	51-84561L03	INTEGRATED CIRCUIT	
U 054	1	51-84561L08	INTEGRATED CIRCUIT	
U 054	1	51-80345A04	INTEGRATED CIRCUIT	CA3240E SCREENED
U 065	1	51-80345A04	INTEGRATED CIRCUIT	CA3240E SCREENED
U 066	1	51-80345A04	INTEGRATED CIRCUIT	CA3240E SCREENED
U 067	1	51-80345A04	INTEGRATED CIRCUIT	CA3240E SCREENED
U 068	1	51-90019B01	INTEGRATED CIRCUIT	EPROM
U 070	1	51-84561L44	INTEGRATED CIRCUIT	
U 071	1	51-84561L41	INTEGRATED CIRCUIT	
U 072	1	51-80375B56	INTEGRATED CIRCUIT	
U 073	1	51-84561L06	INTEGRATED CIRCUIT	
VR001	1	RG-1N5235B	DIODE,ZENER	
VR002	1	RG-1N5235B	DIODE,ZENER	
VR003	1	RG-1N5235B	DIODE,ZENER	
VR004	1	RG-1N5235B	DIODE,ZENER	
VR005	1	RG-1N5235B	DIODE,ZENER	
VR006	1	RG-1N5235B	DIODE,ZENER	
VR007	1	RG-1N5235B	DIODE,ZENER	
VR008	1	RG-1N5235B	DIODE,ZENER	
VR009	1	RG-1N5235B	DIODE,ZENER	
VR010	1	RG-1N5235B	DIODE,ZENER	
VR011	1	RG-1N5235B	DIODE,ZENER	
VR012	1	RG-1N5235B	DIODE,ZENER	
VR013	1	RG-1N5235B	DIODE,ZENER	
VR014	1	RG-1N5235B	DIODE,ZENER	
VR015	1	RG-1N5235B	DIODE,ZENER	
VR016	1	RG-1N5235B	DIODE,ZENER	
VR017	1	48-83461E03	DIODE	
Y 001	1	NDK-018	CRYSTAL	1.8432MHz

REMOTE INTERFACE OPTION

Figure 21-6. Printed Wiring Board Assembly and Parts List

SECTION 22.
SECURE COM OPTION

22.1 DESCRIPTION

The Secure Com option contains two independent sections: an encode section and a decode section. These sections interface with the R2001D transmitter and receiver to allow encrypted messages to be transmitted and received via RF channels. In addition, line drivers and receivers are provided to permit signaling to occur through twisted pairs and modems. The Secure Com option provides programming capability, wherein a radio can be programmed with a test key or by a hand-held key inserter. Measurements made by the Secure Com option include the following:

- deviation measurement (both transmitted and received)
- line level measurement-ac voltage being output to the line drivers and received from the line receivers
- bit error rate measurement-number of bits in error to 0.01 percent.

Other Secure Com features are:

- scaled oscilloscope displays of various portions of the transmitted and received messages
- end of message (EOM) detection and generation ability
- self test functions
- dual code radio testing capability.

22.2 THEORY OF OPERATION

22.2.1 TRANSMIT

The Secure Com Communications System Analyzer is designed to test narrowband FM radios which transmit encrypted audio signals. The radios to be tested use a Continuously Variable Slope Delta Modulator (CVSD) to digitize the microphone audio at a 12 kB/sec rate. After digitization, the plain text to be transmitted is input to the encryption circuitry. The resulting cipher text is then splatter-filtered at 6 kHz to remove upper harmonics and transmitted. The nominal frequency deviation for these radios is 4.0 kHz. Carrier frequencies of these radios can range from 100 kHz to 999.999 MHz and still remain compatible with the test system.

22.2.2 RECEIVE

In receive mode, the radios to be tested demodulate the received signal and feed the resulting encrypted data stream to a bit synchronizer circuit. The receiver is self-synchronizing, meaning that no preamble is required to acquire the signal. Reclocked data is input to the encryption circuitry which decodes the data. The received plain text is converted to an analog waveform in the CVSD. After amplification, this audio waveform is sent to the speaker.

22.3 ENCODER SECTION

22.3.1 INPUTS

The encoder has inputs for the following signals: internal 1-kHz, microphone audio, and external modulation (input through the R2001D front panel). These signals are internally summed so they can be used individually or combined to produce various waveforms. The adjustments provided on the front panel for the 1-kHz level and ext. mod. level, control the level of these signals at the encoder input and have no effect on the transmitted encrypted data deviation level.

22.3.2 ENCRYPTION TYPE

The Secure Com option has the ability to encode and decode encrypted messages. There are provisions for the R2004/5D to hold, as many as four encryption circuits. The R2004/5D can be loaded with multiple encryption circuits of the same type in order that secure systems operating on different code keys can be monitored and tested without reprogramming. Only radios which encrypt the audio as described in paragraphs 22.2.1 and 22.2.2 will be able to operate with the Secure Com test option. Manufacturers other than Motorola produce encrypted radios which are not compatible with the Secure Com tester.

22.3.3 ENCODER OUTPUTS

The encoder section outputs are baseband encrypted data and modulated RF. The baseband encrypted data is available at the MOD OUT jack on the R2004/5D front panel, and also at the LINE OUT and SINGLE ENDED OUT ports on the junction box. LINE OUT is a balanced-line output. Modulated RF is output at the antenna port, the RF I/O port, and the duplex generator port. The internal modulation signal generated by the audio code synthesizer is summed into the encoder outputs. This is to allow the injection of an undesired signal component to introduce bit errors. The summing occurs before RF modulation is complete so the distorted waveform can be transmitted. The CODE SYNTH LVL adjustment on the front

panel controls the amount of undesired signal injection. This adjustment directly affects the modulation level of the transmitted signal; therefore in normal operation CODE SYNTH LVL must be in the MIN position. This summed signal also goes to the line drivers enabling predistorted waveforms to be sent at baseband frequencies.

22.4 DECODER SECTION

22.4.1 INPUTS

The Secure Com decoder can input encrypted signals in RF or baseband form. Modulated RF signals can be input through the antenna port and the RF I/O port. Encrypted baseband signals can be input in balanced-line form at the LINE IN port on the interface junction box, or in single-ended form by grounding one of the LINE IN terminals.

22.4.2 DECRYPTION TYPES

Refer to paragraph 22.3.2 in the Encoder section description.

22.4.3 OUTPUTS

The decoder section has two outputs. The DEMOD OUT connector on the front panel has the demodulated signal (still encrypted) from the receiver. The other output is available on the junction box at the PLAIN TEXT OUT port. This output is the received, decoded, digital data before it is converted to an analog waveform. There is no means by which the received audio waveform can be output by the Secure Com option. It can be observed on the Secure Com internal oscilloscope and heard in the speaker.

22.5 PROGRAMMER SECTION

The programmer section of the Secure Com option performs three tasks: it outputs programming data to a radio to allow programming of a test key; it sends programming data to the encryption circuits internal to the Secure Com option to allow them to be programmed with a test key; and it permits programming data to flow from an external code key insertion device to the internal encryption circuits.

22.6. MEASUREMENTS

22.6.1 BIT ERROR RATE TEST (BER)

The Secure Com option for the R2001D has the ability to perform various BER tests on encrypted radios, and on any baseband system which performs the audio encryption process as described in paragraphs 22.3.1 and 22.3.2. The bit error rate test is accomplished by comparing the plain text into the encoder circuitry with the plain text out of the decoder circuitry of the R2004/5D decoder section or of the radio under test. When performing the BER test, the R2004/5D causes the input to the CVSD to be grounded. This causes the CVSD to produce a 6 kHz square wave output which is encrypted and transmitted via the RF synthesizer and the audio driver circuits. If a loop-around BER test is to be performed, encrypted data enters the Secure Com tester via the RF or line inputs. The encrypted data is then decoded and the resulting plain text sampled by the BER comparison circuit. If a BER test is to be performed on a simplex radio, the plain text out of the radio's decoder is sampled with a probe and routed into the BER comparison circuitry. Therefore, plain text is taken from the radio under test via a probe, or from the R2004/5D's internal decoder, according to the configuration of the R2004/5D. When the R2004/5D is generating in RF mode with the duplex generator off, plain text is input from the external probe. When the duplex generator is in RF mode and on, plain text is taken from the internal decoder. When the R2004/5D is in audio mode, plain text is always taken from the internal decoder regardless of the duplex generator's condition. The received, decoded plain text from the radio under test is assumed to be a 6.0-kHz square wave. This is not chopped or distorted in any way, with an amplitude of 8.0 to 10.0 volts whenever the BER test is active. Unless the waveform presented to the BER probe meets the preceeding requirements of frequency and amplitude, the BER test will not work.

The point inside the radios which must be probed to input the plain text data into the BER test circuitry is on the CVSD. This point is the CVSD output which supplies plain text to be transmitted (the A/D output), and should be available in all Motorola encrypted radios. When the radios are in the receive mode, this CVSD output supplies a reclocked version of the plain text out of the decoder.

22.6.2 DEVIATION MEASUREMENT

By the pseudorandom nature of the data transmitted by Motorola encrypted radios, deviation measurement is more difficult. This is caused by the frequency components in the transmitted data stream. The Secure Com tester offers a more accurate deviation measurement with a new display. The deviation measurement circuitry inside the standard R2001D chassis is AC coupled, but in the Secure Com test system, the low frequency pole of this coupling has been reduced, yielding a more accurate response to data such as that mentioned above. The manner in which the deviation information is displayed has also been enhanced for this particular type of measurement. The display contains two bar graphs, each centered at 4.0 kHz. One represents positive deviation and the other

represents negative deviation. By observing the bar graphs' swing about 4.0 kHz, the operator can get a qualitative measure of how the system is performing. A digital readout on the display indicates an averaged deviation value for a quantitative measurement. Transmitted deviation can be adjusted with the RF scan knob on the R2004/5D.

22.6.3 LINE LEVEL MEASUREMENT

The R2004/5D offers balanced and single-ended line inputs and outputs for interfacing with twisted pair systems and modems. To measure the voltage level output and the voltage level input, a line level display is incorporated into the Secure Com test system. The display contains two bar graphs, one for line level out and one for line level in. Both bar graphs are continuously active. The line voltage is measured in terms of AC voltage only. No power measurements are made. The output voltage level is adjusted with the RF scan control on the front panel of the Secure Com tester.

22.6.4 OSCILLOSCOPE DISPLAYS

To aid the service operator, the Secure Com tester provides oscilloscope displays of intermediate points in the encryption and decryption process. These intermediate points are as follows:

- the transmitted eye pattern (GEN EYE)
- the audio that is being encrypted (GEN AUDIO)
- the received eye pattern (MON EYE)
- the received audio after being decoded (MON AUDIO)

Depending on whether the R2004/5D is in RF or AUDIO mode, the MON EYE and GEN EYE displays show waveforms from different parts of the circuitry.

RF MODE:

When the R2004/5D is configured for RF mode, the GEN EYE and MON EYE displays take their information from the same place as the modulation screen in the standard R2001D. This is done because the MON EYE and GEN EYE screens are calibrated in order that deviation can be read directly off the oscilloscope screen. Internally, the MON EYE and GEN EYE display the waveforms from the modulation screen in the R2001D. Consequently, the generate/monitor switch on the front panel determines the waveform that will be displayed. For example, if the GEN EYE screen were selected, and the R2004/5D was already in monitor (receive) mode, the received eye pattern would be displayed instead of the transmitted eye pattern. To avoid operator confusion as to which waveform is being displayed, the Secure Com tester displays a ground line when the oscilloscope display selected does not correspond to the position of the generate/monitor switch.

AUDIO MODE:

When the R2004/5D has been set up for audio mode, the MON EYE and GEN EYE screens show the encrypted eye pattern as it is being output by the line drivers and received by the line receivers. The oscilloscope displays are calibrated so that voltage measurements can be made directly off the screen. The MON AUDIO and GEN AUDIO are the same displays regardless of the current mode of the R2004/5D. Both of these displays are scaled to reflect the actual voltages being input to the encoder section and being output by the decoder section.

22.7 FEATURES

22.7.1 END OF MESSAGE (EOM SIGNALING TEST)

Motorola encrypted radios transmit a burst of a 6.0 kHz sine wave at the end of a transmission to notify the receiving unit that the transmission is complete and that squelch should be applied. This is done to avoid "squelch tails". The Secure Com tester offers test capability of this signaling function by generating a continuous EOM and by detecting a received EOM.

22.7.2 SELF TESTING

The Secure Com tester performs basic tests on itself. Upon powerup, a self test is performed wherein the random access memory (RAM) and the read only memory (ROM), in both the standard R2001D circuits and the Secure Com circuits is checked. The RAM is tested by writing certain test patterns and then verifying them. ROM is tested by calculating the checksum and comparing it with the value stored in a particular location in the ROM. Another self test which can be performed is a test of the internal encoder and decoder. When the self test is selected by the operator, a 2.0 kHz tone is directly injected into the encoder. The encoder's output is looped to the decoder, and if the system is functioning properly, the 2.0 kHz tone will be heard through R2004/5D speaker.

22.7.3 DUAL CODE OPERATION

There are some Motorola radios encrypted with DVP (Securenet), which have a dual code feature. With dual code radios, another code key can be generated from the one which was programmed by throwing the switch on the radio. The dual code feature is only available with the Securenet encryption algorithm. Dual code operation can be tested with the R2004/5D. The Secure Com tester has a code selection which can only be made when operating with the Securenet format.

22.7.4 PLAIN TEXT OUTPUT

An output has been provided on the interface junction box to supply the received, decoded, digital data to the outside. This waveform is used to calculate certain radio parameters such as dynamic range, slope overload, and so forth. Only the electrical parameters of this output are specified by Motorola GEG.

22.7.5 PRINTER INTERFACE

The Secure Com tester offers a printer port on the side panel. The data output through this port is in serial form, designed to interface with RS-232 type printers. The operator can print any of the Secure Com display screens on the printer, with the exception of the oscilloscope displays (MON EYE, MON AUDIO, GEN EYE, GEN AUDIO) and the line level screen. For operational information of the printer interface, consult the Secure Com operator's manual.

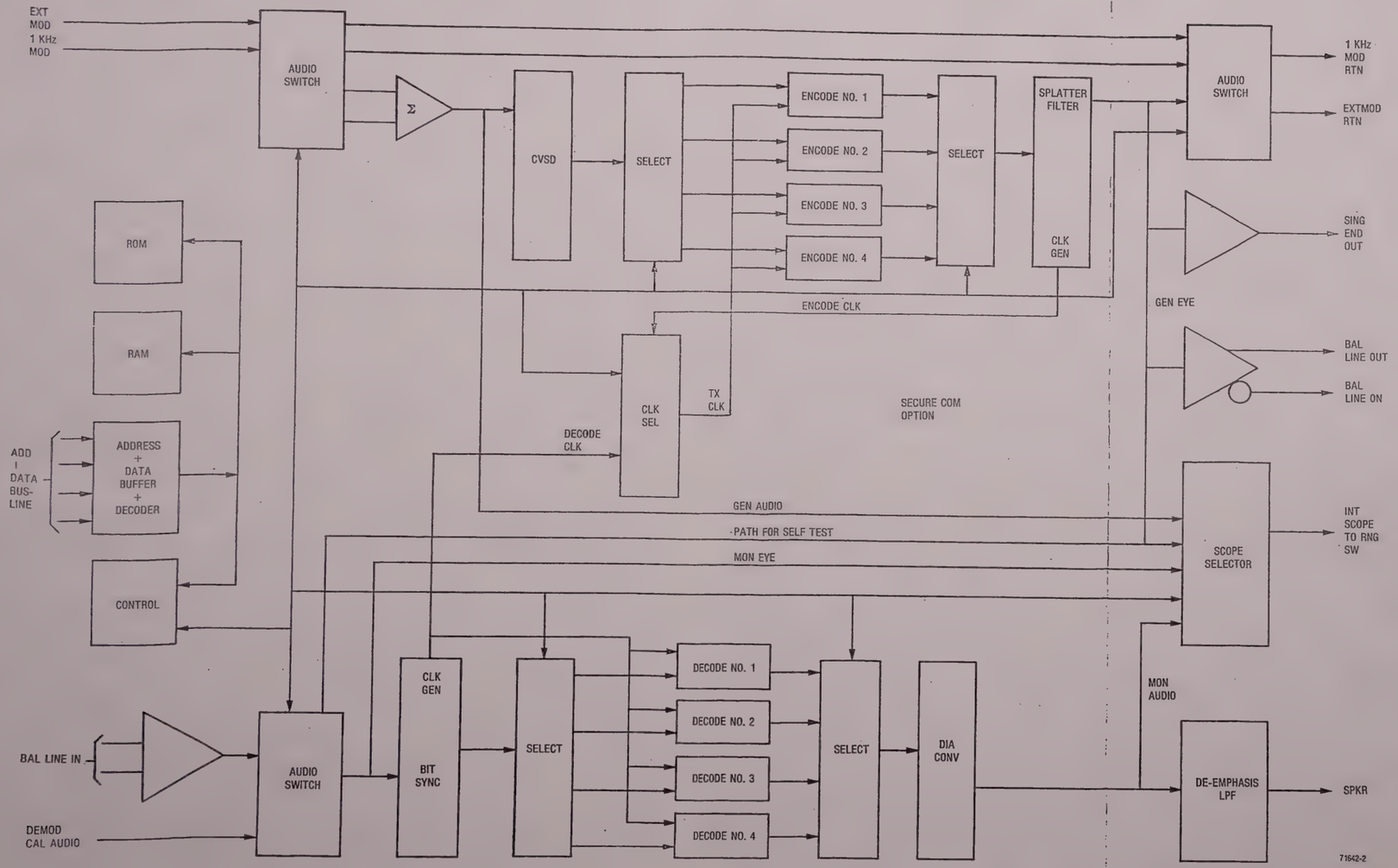

SECURE COM OPTION

Figure 22-1. Block Diagram

22-3

Figure 22-2a. Schematic (sheet 1 of 7)

NOTES

1. PARTIAL REFERENCE DESIGNATIONS ARE SHOWN FOR COMPLETE DESIGNATIONS PREFIX WITH A12
2. FOR REFERENCE DRAWINGS REFER TO
   ASSEMBLY 01-P23360K
   TEST PROCEDURE 12-P23363K
   MODULE SPECIFICATION 12-P23364K
3. UNLESS OTHERWISE SPECIFIED
   ALL RESISTORS ARE IN OHMS, ±1 PCT, 1/4 WATT
   ALL CAPACITORS ARE IN UF
   ALL VOLTAGES ARE IN DC
4. DEVICE TYPE NUMBERS AND CONNECTIONS NOT SHOWN ON SYMBOL ARE LISTED BELOW. UNDERLINED PORTION OF TYPE NUMBER IS USED AS A CODE TO IDENTIFY DEVICES ON DIAGRAM
5. USE TYPE TRN677B FOR DVP OR TYPE TRN4836A FOR DES. NO IC MAY BE PRESENT IN A SLOT IF THE SLOT IS NOT USED
6. FOR DVP - IN SLOT 1; CONNECT JUMPERS FROM E7 TO E9 AND E10 TO E11. IN SLOT 2; CONNECT JUMPERS FROM E1 TO E3 AND E4 TO E5 IN SLOT 3; CONNECT JUMPERS FROM E21 TO E23 AND E24 TO E25. IN SLOT 4; CONNECT JUMPERS FROM E15 TO E17 AND E18 TO E19.

   FOR DES - IN SLOT 1; CONNECT JUMPERS FROM E7 TO E8 AND E10 TO E12. INSLOT 2; CONNECT JUMPERS FROM E1 TO E2 AND E4 TO E6. INSLOT 3; CONNECT JUMPERS FROM E21 TO E22 AND E24 TO E26. IN SLOT 4, CONNECT JUMPERS FROM E15 TO E16 AND E18 TO E20

   FOR UNUSED SLOT - IN SLOT 1; CONNECT JUMPERS FROM E7 TO E8 AND E10 TO E11. INSLOT 2; CONNECT JUMPERS FROM E1 TO E2 AND E4 TO E5 IN SLOT 3; CONNECT JUMPERS FROM E21 TO E22 AND E24 TO E25. IN SLOT 4; CONNECT JUMPERS FROM E15 TO E16 AND E18 TO E19
7. MODEL NUMBER R20040 IS DES IN SLOT 1 (U46 AND U50), MODEL NUMBER R20040 IS DVP IN SLOT 3 (U46 AND U52). MODEL NUMBER R20450 IS DES IN SLOT 1 (U46 AND U50) AND DVP IN SLOT 3 (U46 AND U52)
8. BOARD CAN BE PLUGGED INTO A12 OR A13 POSITIONS IN THE R2001D CHASSIS BY USING APPROPRIATE JUMPERS FOR A12 SLOT. JUMPER BETWEEN E40 AND E41, E43 AND E44, E46 AND E47, E48 AND E50, E52 AND E53, E55 AND E56. FOR A13 SLOT, JUMPER BETWEEN E39 AND E41, E42 AND E44, E45 AND E47, E48 AND E49, E51 AND E52, E54 AND E56.
9. THESE JUMPERS ARE FOR TEST ONLY. DO NOT INSTALL UNLESS INSTRUCTED BY THE TEST PROCEDURE
10. THESE JUMPERS ARE FOR FUTURE EXPANSION. DO NOT INSTALL.
11. THIS JUMPER SHOULD BE INSTALLED ONLY WHEN THE SECURE COM BOARD IS TO BE INSTALLED INTO AN R2001D CHASSIS ALONG WITH THE CELLULAR BOARD (01-P29010H).

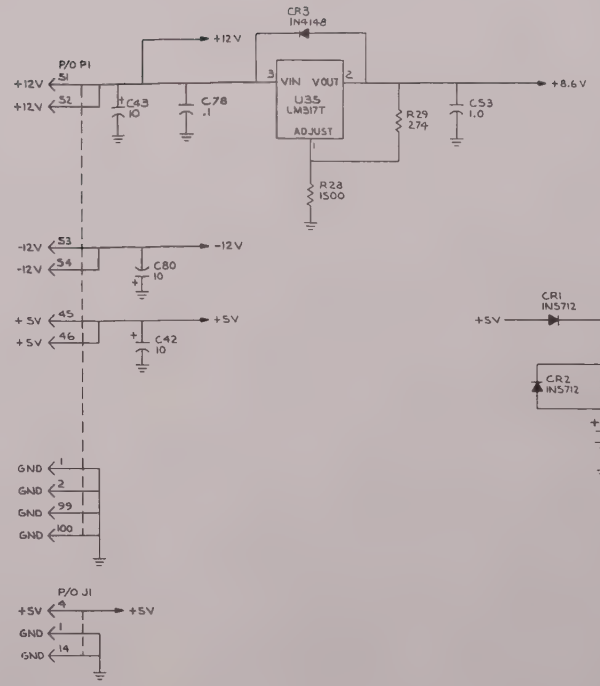

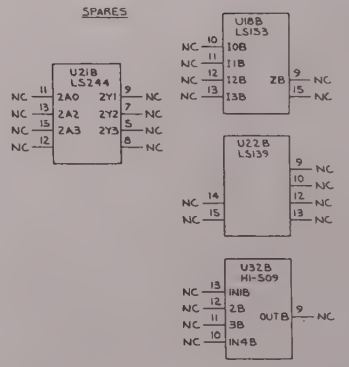

REFERENCE DESIGNATIONS	
HIGHEST NUMBER USED	NOT USED
BT1	
C86	C84
CR5	
E56	
J1	
Q14	Q4, Q7, Q8, Q9
R98	R13, R39-R41, R49-R53, R59, R61, R74, R83, R85, R86, R89
U59	U43, U44, U45
VR11	
Y2	

REF DES	TYPE ⚠4	VCC	GND	NO CONN
U1,U2	74LS244	20	1,10,19	
U3	74LS245	20	10	
U4	74LS139	16	8	4,9,7
U5	HM6116P3	24	12,20	
U6	4827128	1,27,28	14,22	
U7	74LS11	14	7	
U8,U28	74LS04	14	7	
U9	74LS86	14,5	7	
U10,U11	74LS32	14	7	
U12,U13	6821	20,22,24	1	18
U14	6840	14,16	1,2,26	3,6
U15	74LS164	14,2	7	3,4,5,6,10
U16	6852	12	1,24	5,8
U17	AD7524	14	3	
U18	74LS153	16	8,1	9,10,11,12,13,14,15
U19,U30	51R83977M33	3	4	
U20	145568	16	8	5,7,8,11
U21	74LS244	20	10,19	5,7,8,9,11,13,15,12
U22	74LS139	16	8	9,10,12,13,14,15
U23	74HC244	20	10	
U24	74LS92	5	6,7,10	2,3,4,8,11,13
U25	145398	16	1,8,15	
U26	51R83977M38	1		4,5,6,8,10,14,15,20,21,22,24
U27	74LS244	20	10	
U29	51R83977M38	1	13	4,8,20,21,22,24 25,26,27

REF DES	TYPE ⚠4	VCC	GND	NO CONN
U31,U33	HI-201		5	
U32,U34	HI-509		15	
U35	LM317T			
U36	MC14504B		8	
U37	CA3240E			
U38	MC14011B	14	7	
U39	MC1400G2		2,6	1,3,5
U40,U41	MC1458			
U42	74HC00	14	7	
U46,U47	⚠5		18	12
U48,U49				
U50,U51	⚠5		13,17,18	12,14
U52,U53				
U54	74LS74	4,10,13,14	7	5,8
U55	MC14539		7	
U56	CA3240E			
U57	HI-201		5	
U58	MC1458			
U59	MC14504		8	

WARNING:
STATIC-SENSITIVE PARTS
HANDLE APPROPRIATELY

71642-3A

Figure 22-2b. Schematic (sheet 2 of 7)

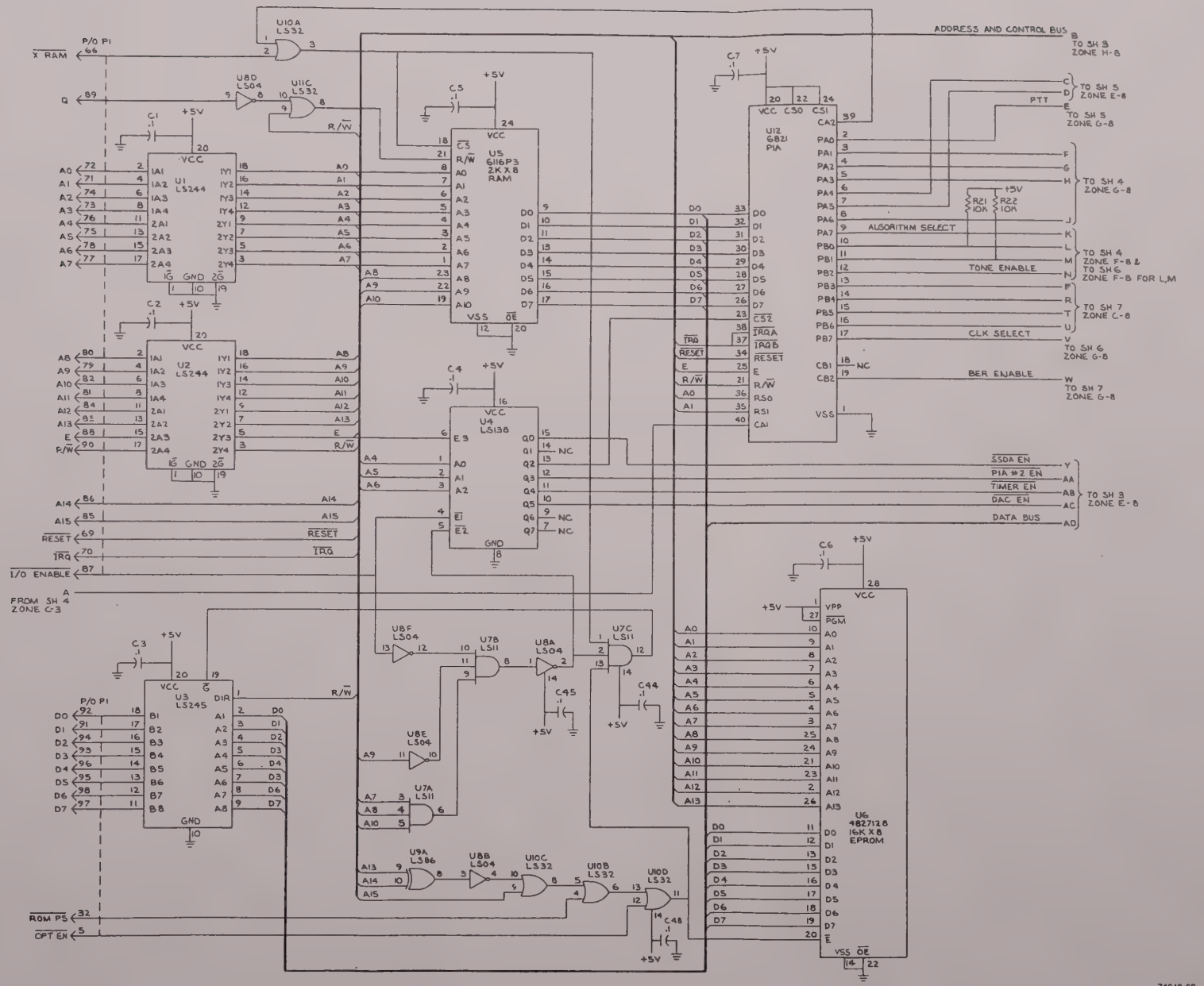

71642-3B

WARNING:
STATIC-SENSITIVE PARTS
HANDLE APPROPRIATELY

Figure 22-2c. Schematic (sheet 3 of 7)

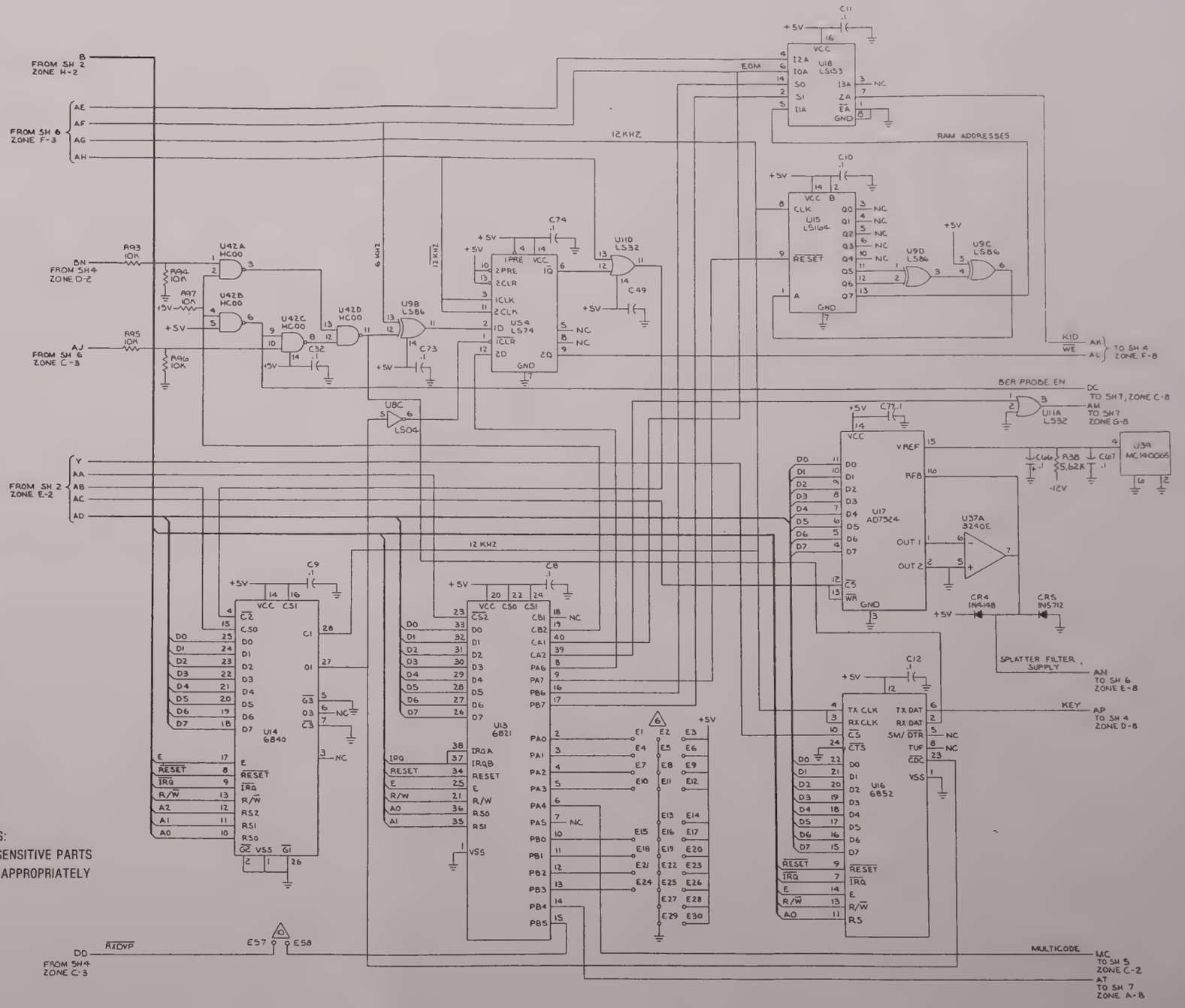

71642-3C

Figure 22-2d. Schematic (sheet 4 of 7)

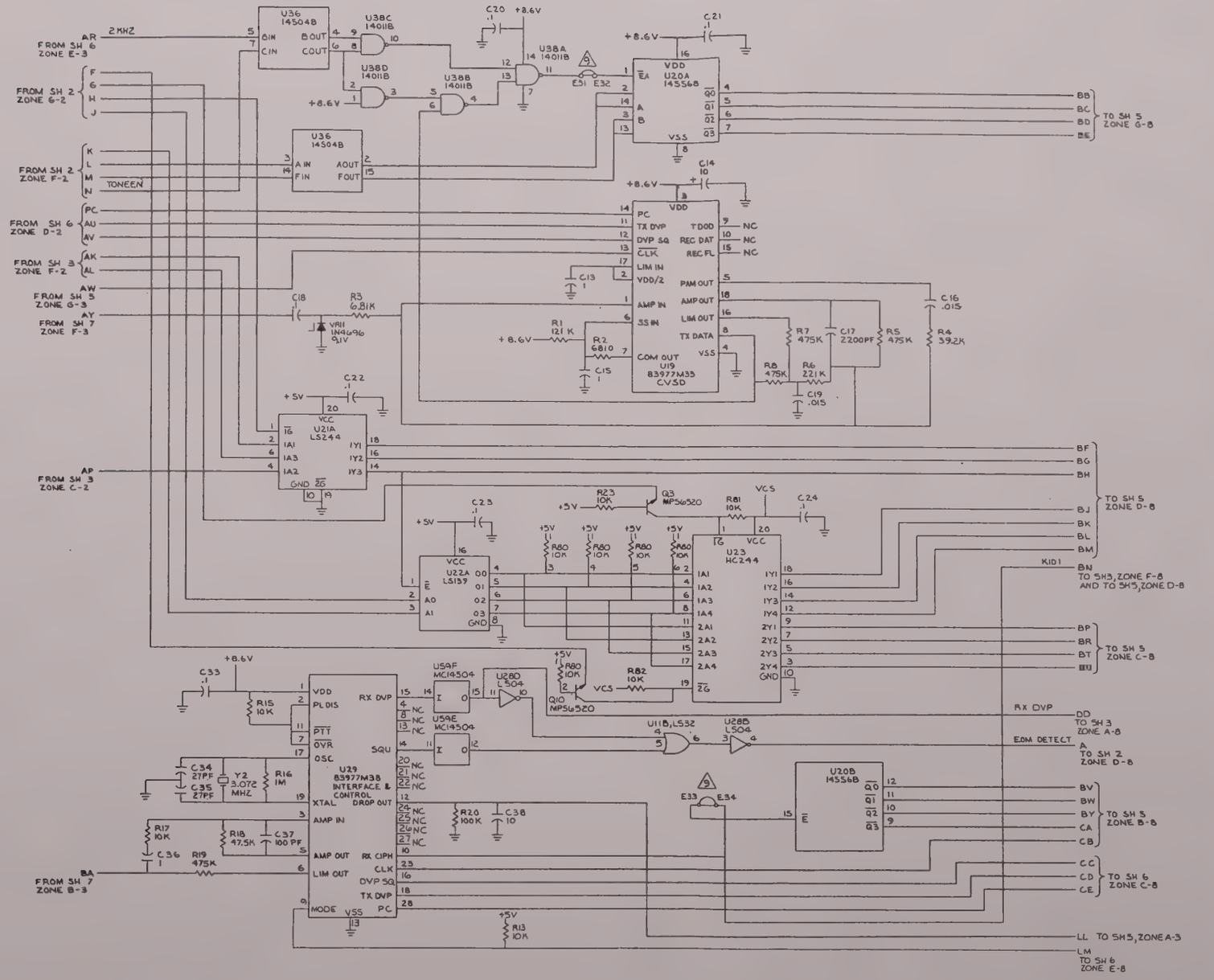

WARNING:
STATIC-SENSITIVE PARTS
HANDLE APPROPRIATELY

Figure 22-2e. Schematic (sheet 5 of 7)

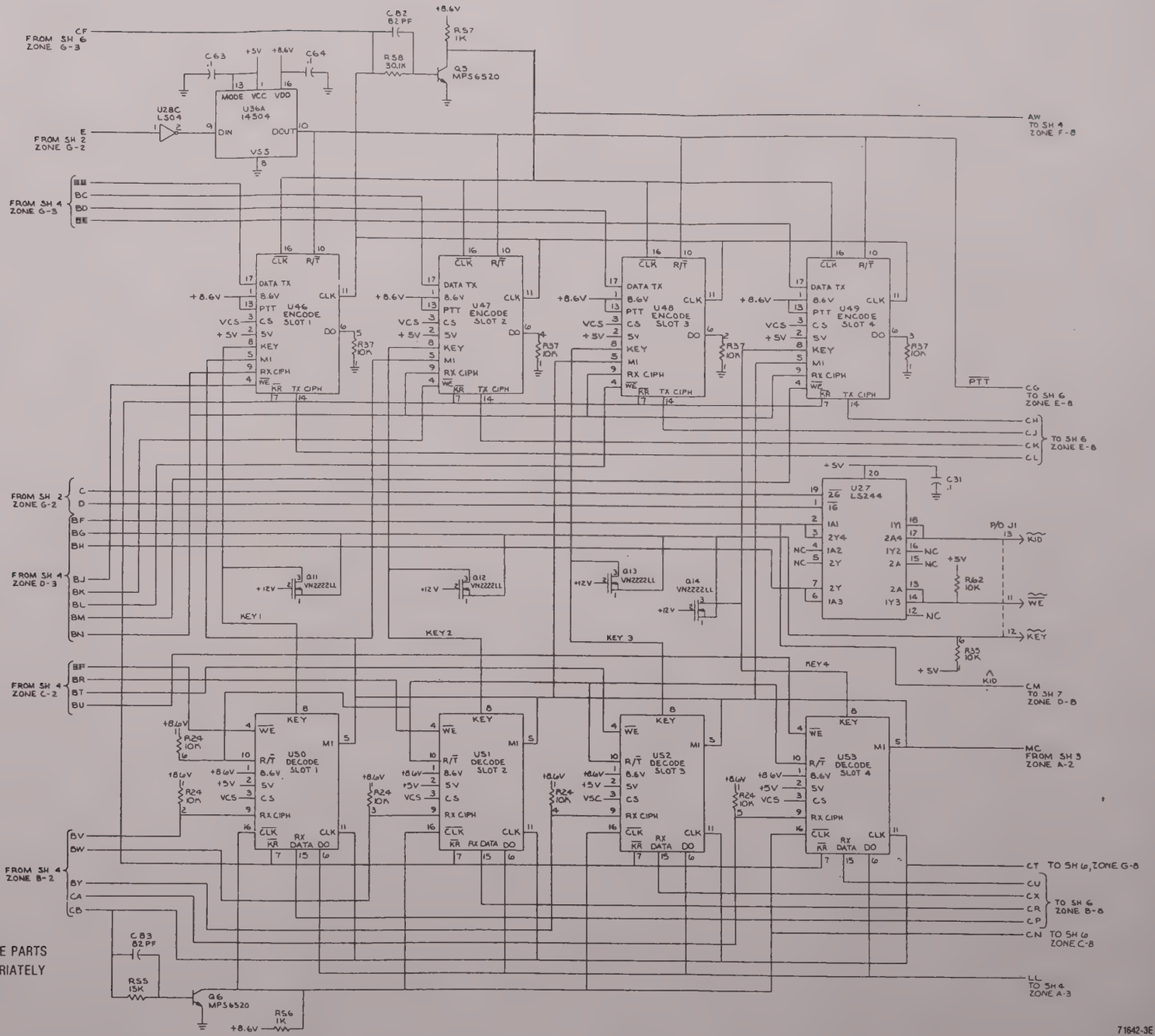

Figure 22-2f. Schematic (sheet 6 of 7)

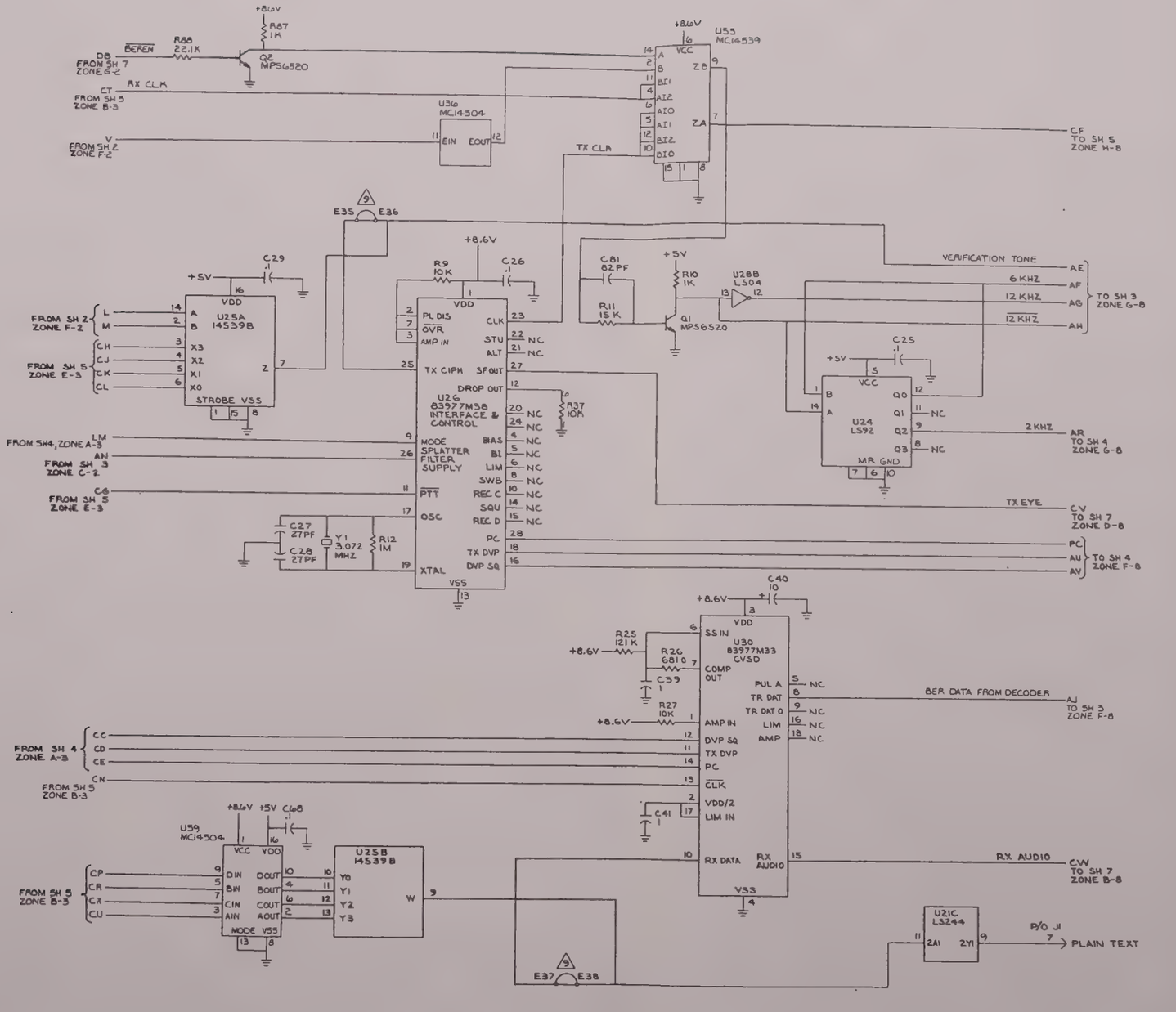

WARNING:
STATIC-SENSITIVE PARTS
HANDLE APPROPRIATELY

Figure 22-2g. Schematic (sheet 7 of 7)

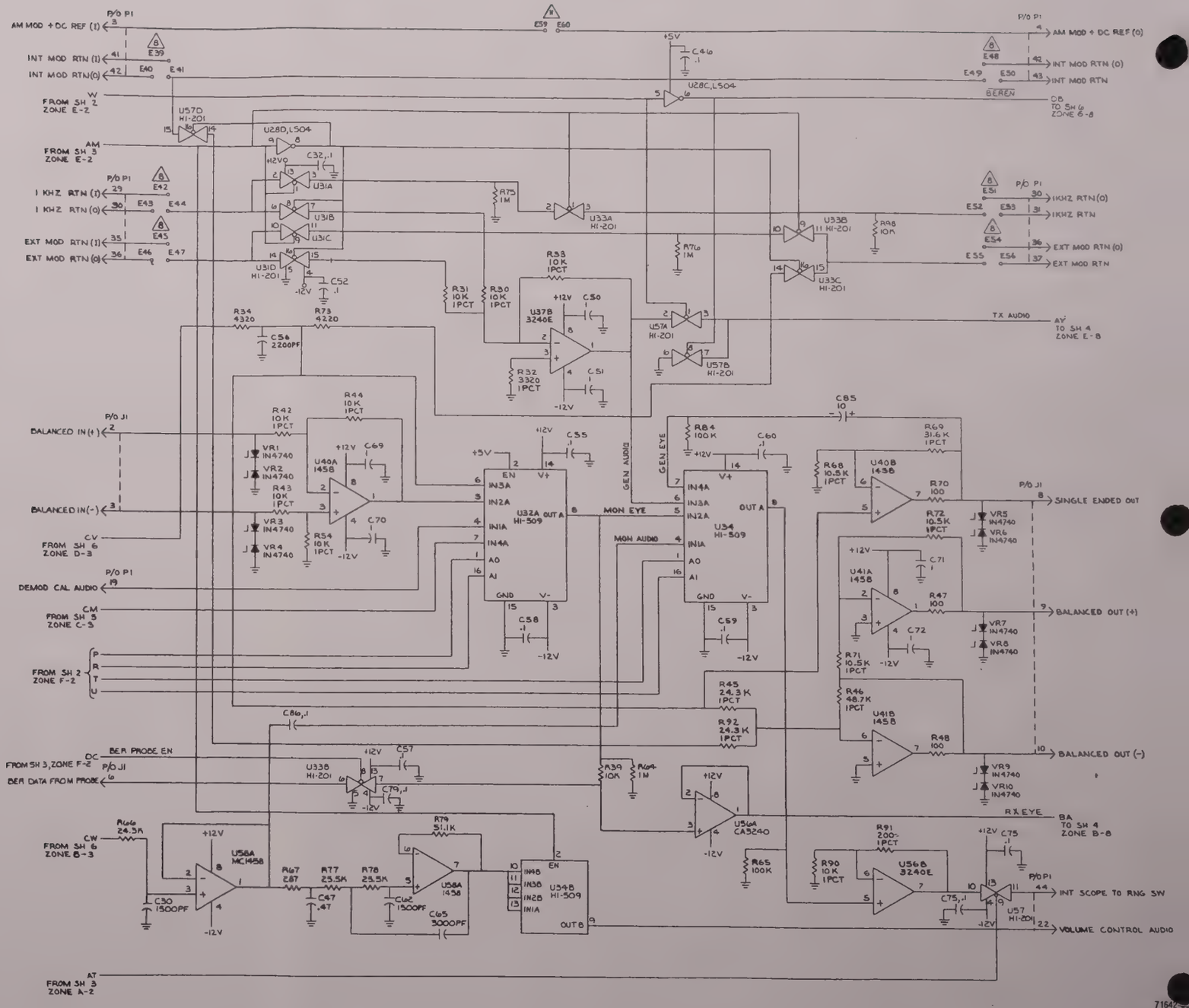

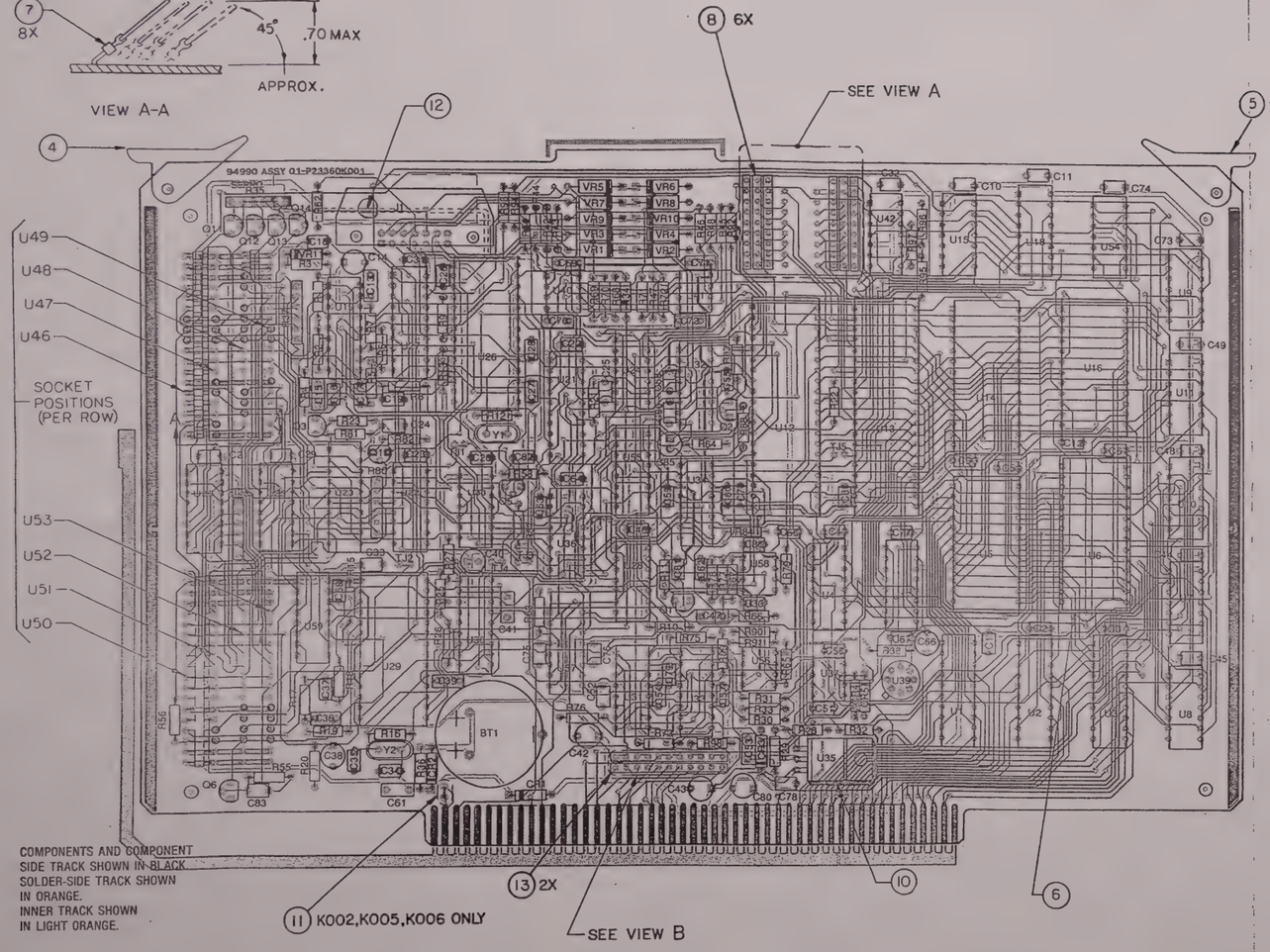

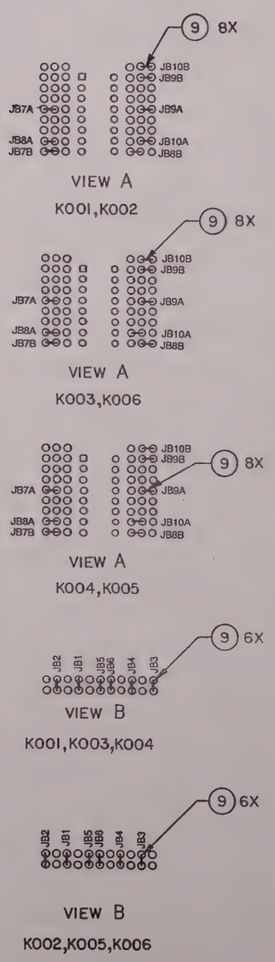

SECURE COM OPTION

Find No.	Qty. Req.	Part No.	Nomenclature	Part Value
004	1	45-80839B28	CARD EJECTOR	
005	1	45-80375B53	CARD EJECTOR, MARKED	
BT001	1	59-80372B86	BATTERY	3.6V NI-CAD
C 001	1	21-80342B10	CAPACITOR	1UF-20-50
C 002	1	21-80342B10	CAPACITOR	1UF-20-50
C 003	1	21-80342B10	CAPACITOR	1UF-20-50
C 004	1	21-80342B10	CAPACITOR	1UF-20-50
C 005	1	21-80342B10	CAPACITOR	1UF-20-50
C 006	1	21-80342B10	CAPACITOR	1UF-20-50
C 007	1	21-80342B10	CAPACITOR	1UF-20-50
C 008	1	21-80342B10	CAPACITOR	1UF-20-50
C 009	1	21-80342B10	CAPACITOR	1UF-20-50
C 010	1	21-80342B10	CAPACITOR	1UF-20-50
C 011	1	21-80342B10	CAPACITOR	1UF-20-50
C 012	1	21-80342B10	CAPACITOR	1UF-20-50
C 013	1	21-80342B46	CAPACITOR	1.0UF-20-50
C 014	1	23-80341B15	CAPACITOR	1.0UF-20-25
C 015	1	21-80342B46	CAPACITOR	1.0UF-20-50
C 016	1	21-80342B34	CAPACITOR	015UF-20-50
C 017	1	21-80370A24	CAPACITOR	2200PF-20-100
C 018	1	21-80342B10	CAPACITOR	1UF-20-50
C 019	1	21-80342B34	CAPACITOR	015UF-20-50
C 020	1	21-80342B10	CAPACITOR	1UF-10-50
C 021	1	21-80342B10	CAPACITOR	1UF-10-50
C 022	1	21-80342B10	CAPACITOR	1UF-20-50
C 023	1	21-80342B10	CAPACITOR	1UF-20-50
C 024	1	21-80342B10	CAPACITOR	1UF-20-50
C 025	1	21-80342B10	CAPACITOR	1UF-20-50
C 026	1	21-80342B10	CAPACITOR	1UF-20-50
C 027	1	21-80341B64	CAPACITOR	27PF-5-50
C 028	1	21-80341B64	CAPACITOR	27PF-5-50
C 029	1	21-80342B10	CAPACITOR	1UF-20-50
C 030	1	21-80341B55	CAPACITOR	1500PF-5-50
C 031	1	21-80342B10	CAPACITOR	1UF-20-50
C 032	1	21-80342B10	CAPACITOR	1UF-20-50
C 033	1	21-80342B10	CAPACITOR	1UF-20-50
C 034	1	21-80341B64	CAPACITOR	27PF-5-50
C 035	1	21-80341B64	CAPACITOR	27PF-5-50
C 036	1	21-80342B45	CAPACITOR	1.0UF-20-50
C 037	1	21-80341B45	CAPACITOR	100PF-5-50
C 038	1	21-80341B15	CAPACITOR	10UF-20-50
C 039	1	21-80342B46	CAPACITOR	1.0UF-20-50
C 040	1	23-80341B15	CAPACITOR	10UF-20-50
C 041	1	21-80342B46	CAPACITOR	1.0UF-20-50
C 042	1	23-80341B15	CAPACITOR	10UF-20-50
C 043	1	23-80341B15	CAPACITOR	10UF-20-50
C 044	1	21-80342B10	CAPACITOR	1UF-20-50
C 045	1	21-80342B10	CAPACITOR	1UF-20-50
C 046	1	21-80342B10	CAPACITOR	1UF-20-50
C 047	1	21-80342B45	CAPACITOR	47UF-10-50
C 048	1	21-80342B10	CAPACITOR	1UF-20-50
C 049	1	21-80342B10	CAPACITOR	1UF-20-50
C 050	1	21-80342B65	CAPACITOR	1.0UF-20-50
C 051	1	21-80342B46	CAPACITOR	1.0F-20-50
C 052	1	21-80342B10	CAPACITOR	1UF-20-50
C 053	1	21-80342B46	CAPACITOR	1.0UF-20-50
C 054	1	21-80342B10	CAPACITOR	1UF-20-50
C 055	1	21-80342B10	CAPACITOR	1UF-20-50
C 056	1	21-80370A24	CAPACITOR	2200PF-20-50
C 057	1	21-80342B10	CAPACITOR	1UF-20-50
C 058	1	21-80342B10	CAPACITOR	1UF-20-50
C 060	1	21-80342B10	CAPACITOR	1UF-20-50
C 061	1	21-80342B46	CAPACITOR	1.0UF-20-50
C 062	1	21-80341B55	CAPACITOR	150PF-5-50
C 063	1	21-80342B10	CAPACITOR	1UF-20-50
C 064	1	21-80342B10	CAPACITOR	1UF-20-50
C 065	1	21-80341B67	CAPACITOR	3000PF-5-50
C 066	1	23-80341B15	CAPACITOR	10UF-20-50
C 067	1	21-80342B10	CAPACITOR	1UF-20-50
C 068	1	21-80342B10	CAPACITOR	1UF-20-50
C 069	1	21-80342B46	CAPACITOR	1.0UF-20-50
C 070	1	21-80342B46	CAPACITOR	1.0UF-20-50
C 071	1	21-80342B46	CAPACITOR	1.0UF-20-50
C 072	1	21-80342B46	CAPACITOR	1.0UF-20-50
C 073	1	21-80342B10	CAPACITOR	1UF-20-50
C 074	1	21-80342B10	CAPACITOR	1UF-20-50
C 075	1	21-80342B10	CAPACITOR	1UF-20-50
C 076	1	21-80342B10	CAPACITOR	1UF-20-50
C 077	1	21-80342B10	CAPACITOR	1UF-20-50
C 078	1	21-80342B10	CAPACITOR	1UF-20-50
C 079	1	21-80342B10	CAPACITOR	1UF-20-50

SECURE COM OPTION

Figure 22-3. Printed Wiring Board Assembly and Parts List

SECURE COM OPTION (Cont)

Find No.	Qty. Req.	Part No.	Nomenclature	Part Value
C 080	1	21-80342B10	CAPACITOR	10UF-20-25
C 081	1	21-80372B88	CAPACITOR	82PF-5-50
C 082	1	21-80372B88	CAPACITOR	82PF-5-50
C 083	1	21-80372B88	CAPACITOR	82PF-5-50
C 085	1	23-80341B15	CAPACITOR	10UF-20-25
C 086	1	21-80342B10	CAPACITOR	1UF-20-50
R 001	1	48-80396A27	DIODE	
R 002	1	48-80396A27	DIODE	
R 003	1	48-804463K0[illegible]	DIODE	
R 004	1	48-804463K0[illegible]	DIODE	
R 005	1	48-80396A27	DIODE	
Q 001	1	48-80340B86	TRANSISTOR	
Q 002	1	48-80340B86	TRANSISTOR	
Q 003	1	48-80340B86	TRANSISTOR	
Q 005	1	48-80340B86	TRANSISTOR	
Q 006	1	48-80340B86	TRANSISTOR	
Q 010	1	48-80340B86	TRANSISTOR	
Q 011	1	48-80340B86	TRANSISTOR	
Q 012	1	48-80340B86	TRANSISTOR	
Q 013	1	48-80340B86	TRANSISTOR	
Q 014	1	48-80340B86	TRANSISTOR	
R 001	1	06-10621D96	RESISTOR	121K-1-1/4
R 002	1	06-10621C75	RESISTOR	6.81K-1-1/4
R 003	1	06-10621D49	RESISTOR	39.2K-1-1/4
R 004	1	06-10621E54	RESISTOR	475K-1-1/4
R 006	1	06-10621E22	RESISTOR	221K-1-1/4
R 007	1	06-10621E54	RESISTOR	475K-1-1/4
R 008	1	06-10621E54	RESISTOR	475K-1-1/4
R 009	1	06-10621C91	RESISTOR	10K-1-1/4
R 010	1	06-10621B94	RESISTOR	1K-1-1/4
R 011	1	06-10621C12	RESISTOR	15K-1-1/4
R 012	1	06-10621E85	RESISTOR	1M-5-1/4
R 013	1	06-10621C91	RESISTOR	10K-1-1/4
R 015	1	06-10621C91	RESISTOR	10K-1-1/4
R 016	1	06-10621E85	RESISTOR	1M-1-1/4
R 017	1	06-10621C91	RESISTOR	10K-1-1/4
R 018	1	06-10621D57	RESISTOR	47.5K-1-1/4
R 019	1	06-10621E54	RESISTOR	475K-1-1/4
R 020	1	06-10621D88	RESISTOR	100K-1-1/4
R 021	1	06-10621C91	RESISTOR	10K-1-1/4
R 022	1	06-10621C91	RESISTOR	10K-1-1/4
R 023	1	06-10621C91	RESISTOR	10K-1-1/4
R 024	1	51-80370A89	RESISTOR NETWORK	
R 025	1	06-10621D96	RESISTOR	121-1-1/4
R 026	1	06-10621C75	RESISTOR	6.81K-1-1/4
R 027	1	06-10621C91	RESISTOR	10K-1-1/4
R 028	1	06-10621C12	RESISTOR	1.5K-1-1/4
R 029	1	06-10621B40	RESISTOR	274K-1-1/4
R 030	1	06-10621C91	RESISTOR	10K-1-1/4
R 031	1	06-10621C91	RESISTOR	10K-1-1/4
R 032	1	06-10621C45	RESISTOR	3.32K-1-1/4
R 033	1	06-10621C91	RESISTOR	10K-1-1/4
R 034	1	06-10621C56	RESISTOR	4.32K-1-1/4
R 035	1	51-80370A89	RESISTOR NETWORK	
R 036	1	06-10621C38	RESISTOR	2.8K-1-1/4
R 037	1	51-80370A89	RESISTOR NETWORK	
R 038	1	06-10621C67	RESISTOR	5.62K-1-1/4
R 039	1	06-10621C91	RESISTOR	10K-1-1/4
R 042	1	06-10621C91	RESISTOR	10K-1-1/4
R 043	1	06-10621C91	RESISTOR	10K-1-1/4
R 044	1	06-10621C91	RESISTOR	10K-1-1/4
R 045	1	06-10621D29	RESISTOR	2.43K-1-1/4
R 046	1	06-10621D58	RESISTOR	48.7K-1-1/4
R 047	1	06-10621A97	RESISTOR	100-1-1/4
R 048	1	06-10621A97	RESISTOR	100-1-1/4
R 054	1	06-10621C91	RESISTOR	10K-1-1/4
R 055	1	06-10621C12	RESISTOR	15K-1-1/4
R 056	1	06-10621B94	RESISTOR	1K-1-1/4
R 057	1	06-10621B94	RESISTOR	1K-1-1/4
R 058	1	06-10621D38	RESISTOR	30.1K-1-1/4
R 062	1	06-10621C91	RESISTOR	10K-1-1/4
R 063	1	06-10621E85	RESISTOR	1M-1-1/4
R 064	1	06-10621E85	RESISTOR	1M-1-1/4
R 065	1	06-10621D88	RESISTOR	100K-1-1/4
R 066	1	06-10621D29	RESISTOR	24.3K-1-1/4
R 067	1	06-10621B42	RESISTOR	287-1-1/4
R 068	1	06-10621C93	RESISTOR	10.5K-1-1/4
R 069	1	06-10621D40	RESISTOR	31.6K-1-1/4
R 070	1	06-10621A97	RESISTOR	100-1-1/4
R 071	1	06-10621C93	RESISTOR	10.5K-1-1/4
R 072	1	06-10621C93	RESISTOR	10.5K-1-1/4
R 073	1	06-10621C55	RESISTOR	4.22K-1-1/4

Find No.	Qty. Req.	Part No.	Nomenclature	Part Value
R 075	1	06-10621E85	RESISTOR	1M-1-1/4
R 076	1	06-10621E985	RESISTOR	1M-1-1/4
R 077	1	06-10621D31	RESISTOR	25.5K-1-1/4
R 078	1	06-10621D31	RESISTOR	25.5K-1-1/4
R 079	1	06-10621D60	RESISTOR	51.1K-1-1/4
R 080	1	51-80370A89	RESISTOR NETWORK	
R 081	1	06-10621C91	RESISTOR	10K-1-1/4
R 082	1	06-10621C91	RESISTOR	10K-1-1/4
R 084	1	06-10621D88	RESISTOR	100K-1-1/4
R 087	1	06-10621B94	RESISTOR	1K-1-1/4
R 088	1	06-10621D25	RESISTOR	22.1K-1-1/4
R 090	1	06-10621C91	RESISTOR	10K-1-1/4
R 091	1	06-10621B29	RESISTOR	200-1-1/4
R 092	1	06-10621D29	RESISTOR	24.3K-1-1/4
R 093	1	06-10621C91	RESISTOR	10K-1-1/4
R 094	1	06-10621C91	RESISTOR	10K-1-1/4
R 095	1	06-10621C91	RESISTOR	10K-1-1/4
R 096	1	06-10621C91	RESISTOR	10K-1-1/4
R 097	1	06-10621C91	RESISTOR	10K-1-1/4
R 098	1	06-10621C91	RESISTOR	10K-1-1/4
U 001	1	51-82609M56	INTEGRATED CIRCUIT	
U 002	1	51-82609M56	INTEGRATED CIRCUIT	
U 003	1	51-82609M57	INTEGRATED CIRCUIT	
U 004	1	51-84561L41	INTEGRATED CIRCUIT	
U 005	1	51-80339B86	INTEGRATED CIRCUIT	
U 006	1	51-80339B89	INTEGRATED CIRCUIT	
U 007	1	51-84561L44	INTEGRATED CIRCUIT	
U 008	1	51-84561L03	INTEGRATED CIRCUIT	
U 009	1	51-82609M79	INTEGRATED CIRCUIT	
U 010	1	51-84561L36	INTEGRATED CIRCUIT	
U 011	1	51-84561L36	INTEGRATED CIRCUIT	
U 012	1	51-82807K20	INTEGRATED CIRCUIT	
U 013	1	51-82807K20	INTEGRATED CIRCUIT	
U 014	1	51-82848M44	INTEGRATED CIRCUIT	
U 015	1	51-80370A85	INTEGRATED CIRCUIT	
U 016	1	51-82807K10	INTEGRATED CIRCUIT	
U 017	1	51-80372B96	INTEGRATED CIRCUIT	
U 018	1	51-80370A84	INTEGRATED CIRCUIT	
U 019	1	51-83977M33	INTEGRATED CIRCUIT	
U 020	1	51-80370A81	INTEGRATED CIRCUIT	
U 021	1	51-82609M56	INTEGRATED CIRCUIT	
U 022	1	51-84561242	INTEGRATED CIRCUIT	
U 023	1	51-82609M56	INTEGRATED CIRCUIT	
U 024	1	51-80370A87	INTEGRATED CIRCUIT	
U 025	1	51-80370A80	INTEGRATED CIRCUIT	
U 026	1	51-83977M38	INTEGRATED CIRCUIT	
U 027	1	51-82609M56	INTEGRATED CIRCUIT	
U 028	1	51-84561L03	INTEGRATED CIRCUIT	
U 029	1	51-83977M38	INTEGRATED CIRCUIT	
U 030	1	51-83977M33	INTEGRATED CIRCUIT	
U 031	1	51-80345A05	INTEGRATED CIRCUIT	
U 032	1	51-80372B97	INTEGRATED CIRCUIT	
U 033	1	51-80345A05	INTEGRATED CIRCUIT	
U 034	1	51-80372B97	INTEGRATED CIRCUIT	
U 035	1	51-80370A78	INTEGRATED CIRCUIT	
U 036	1	51-80372B85	INTEGRATED CIRCUIT	
U 037	1	51-80345A04	INTEGRATED CIRCUIT	
U 038	1	51-05596E46	INTEGRATED CIRCUIT	
U 039	1	51-80370A79	INTEGRATED CIRCUIT	
U 040	1	51-80370A82	INTEGRATED CIRCUIT	
U 041	1	51-80370A82	INTEGRATED CIRCUIT	
U 042	1	51-84561L04	INTEGRATED CIRCUIT	
U 05+	1	51-83627M93	INTEGRATED CIRCUIT	
U 055	1	51-80370A80	INTEGRATED CIRCUIT	
U 056	1	51-80345A04	INTEGRATED CIRCUIT	
U 057	1	51-80345A05	INTEGRATED CIRCUIT	
U 058	1	51-80370A82	INTEGRATED CIRCUIT	
U 059	1	51-80372B85	INTEGRATED CIRCUIT	
VR001	1	48-80372B95	DIODE 10V	
VR002	1	48-80372B95	DIODE 10V	
VR003	1	48-80372B95	DIODE 10V	
VR004	1	48-80372B95	DIODE 10V	
VR005	1	48-80372B95	DIODE 10V	
VR006	1	48-80372B95	DIODE 10V	
VR007	1	48-80372B95	DIODE 10V	
VR008	1	48-80372B95	DIODE 10V	
VR009	1	48-80372B95	DIODE 10V	
VR010	1	48-80372B95	DIODE 10V	
VR011	1	48-80372B94	DIODE 9.1V	
Y 001	1	48-80372B92	CRYSTAL 3.072 MHz	
Y 002	1	48-80372B92	CRYSTAL 3.072 MHz	

23.1 DESCRIPTION

Motorola trunked radios can be tested using the Trunking Test board. By selecting tests from a menu on the screen, the operator uses the board to provide data and generate the necessary signals to communicate with a Motorola trunked radio. This board is also used to auto test trunked radios over the entire frequency range.

23.2 THEORY OF OPERATION

23.2.1 TRANSMITTED DATA

The system microprocessor generates all data transmitted to the Motorola trunked radio under test. A serial communication controller (SCC) (U10) generates both control channel and voice channel transmitted data. The control channel data is modulated onto the control channel by the trunking synthesizer (U25 and U27). The voice channel data is added to the EXT MOD of the R2001D synthesizer using U30 and U22A.

The transmit clock is divided down from the 3.6864 MHz oscillator (U7) to the desired data rates using the SCC. Control channel data is transmitted out at TP3 at 3600 bits per second (bps) by the SCC. High speed handshaking is transmitted out at TP4 at a data rate of 3600 bps. Low speed handshaking is transmitted out at TP4 at 150 bps.

The microprocessor counts the number of control channel bits transmitted to allow synchronization to the receive data stream. U11 is used to gate and clock a timer (U13) in order for the microprocessor to read the number of bits transmitted.

23.2.2 RECEIVED DATA

The data received from the trunking radio is shaped to TTL levels using a center slice circuit (U18 and U19). The SCC samples the data at four times the receive data rate (14.4 kHz). The SCC data is then read by the microprocessor to determine the received data.

The receive clock is divided down from the 3.6864 MHz oscillator (U7) to 14.4 kHz by U8.

23.2.3 DATA DETECT CIRCUIT

The data detect circuit operates as a fast attact squelch circuit. Since the squelch is always open in trunking modes, noise is present in the DEMOD CAL AUDIO input unless the radio is transmitting. The received signal is amplified by U31A and high pass filtered (U21A). The output of U21A is then integrated by U21B and compared with a known level to indicate whether noise or a signal is present. The output of U19B will be a logic 0 if signal is present.

23.2.4 MODULATION

The audio modulation paths are enabled or disabled depending on whether or not a trunking test is in progress. If no trunking test is in progress, the EXT MOD RTN (0), INT MOD RTN (0), and the 1 kHz SINE RTN (0) paths are enabled. At the beginning of a trunking test and until the radio is on the voice channel, the EXT MOD RTN (1), INT MOD RTN (0) and the 1 kHz SINE RTN (0) paths are disabled. The EXT MOD RTN (0) path continues to be enabled as the high speed/low speed data is transmitted through U30. After the radio has completed the signalling required for the test, EXT MOD RTN (1), INT MOD RTN (0), 1 kHz SINE RTN (0) paths are enabled.

The 1 kHz SINE RTN (0) line can be used to measure receiver distortion and sensitivity. EXT MOD INPUT can be used to add an external modulation source.

23.2.5 SYNTHESIZER

23.2.5.1 General

The trunking synthesizer functions as the control channel when testing Motorola trunked radios. The synthesizer is a single loop design with an operating frequency range of 425.5000 — 435.0000 MHz with 6.25 kHz spacing between channels. A frequency doubler is used to provide an output frequency range of 851.0000 — 870.0000 MHz with 12.5 kHz step.

The synthesizer provides direct FM modulation from 1 Hz to 3.6 kHz, using dual port modulation techniques.

23.2.5.2 Theory of Operation

The trunking synthesizer consists of the following sections:

- voltage pre-regulator (U24) and voltage regulator (U29)
- 12.8 MHz reference oscillator (U27)
- phase lock loop synthesizer (U28)
- 425.5-435 MHz VCO (U25)
- frequency doubler (U26)

The voltage pre-regulator provides a 7.5V reference which can be turned off to disable the synthesizer. The 7.5V is then regulated to 4.6 volts, which is used by the VCO (U25), and to +5 volts, which is used by U26, U27, and U28.

A 12.8 MHz reference is generated by the oscillator IC (U27). The control channel data is also modulated onto the output by the reference oscillator.

The phase locked loop IC (PLL) (U28) provides digital dividers, phase frequency detector, loop filter, and a lock detect output on one IC. The PLL IC compares the reference frequency to the divider frequency from the VCO IC in order to generate an error voltage. The frequency of the loop is set by programming internal registers of the PLL IC using the PIA (U9). The output frequency before the frequency doubler is programmed as follows:

$$f(out) = (127N + A) * 6250\ Hz$$

The voltage controlled oscillator (VCO) (U25) uses the error voltage supplied by the PLL IC to generate an output frequency range of 425.5−435 MHz. Control channel data is also modulated onto the output frequency at the VCO. The output frequency of the VCO is then doubled to the desired frequency range, 851-870 MHz, by the frequency multiplier (U26).

Figure 23-1. Block Diagram

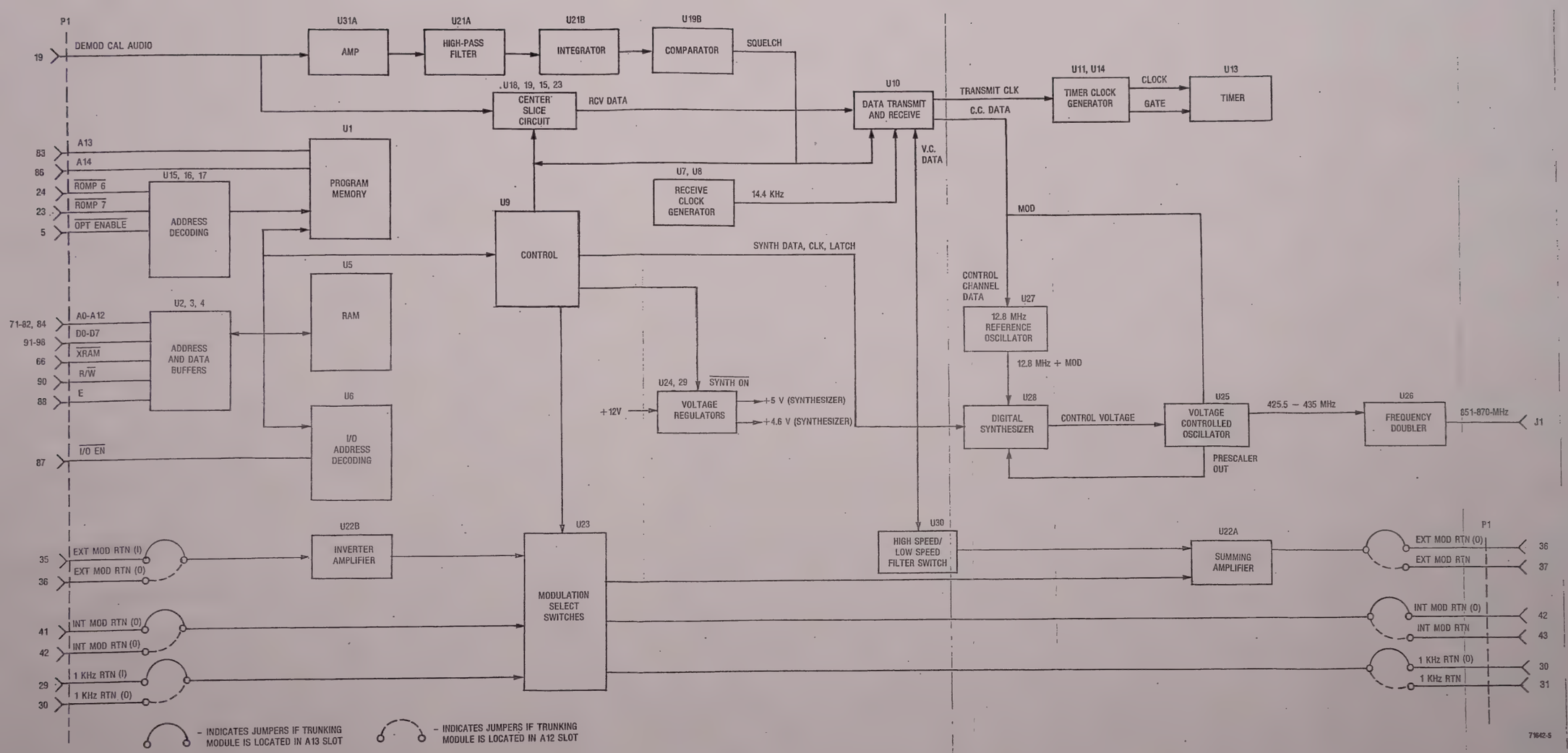

Figure 23-2a. Schematic (sheet 1 of 5)

NOTES:

1. PARTIAL REFERENCE DESIGNATIONS ARE SHOWN FOR COMPLETE DESIGNATIONS PREFIX WITH 1A13.
2. FOR REFERENCE DRAWINGS REFER TO:
   ASSEMBLY 61-P29000H
   MODULE TEST PROCEDURE 12-P29013H
   MODULE SPEC 12-P29014H
   SYSTEM TEST PROCEDURE 12-P23331K
3. UNLESS OTHERWISE SPECIFIED
   ALL RESISTORS ARE IN OHMS, ±5 PCT, 1/4 WATT.
   ALL CAPACITORS ARE IN UF.
   ALL VOLTAGES ARE DC.

△4 DEVICE TYPE NUMBERS AND CONNECTIONS NOT SHOWN ON SYMBOL ARE LISTED BELOW. UNDERLINED PORTION OF TYPE NUMBER IS USED AS A CODE TO IDENTIFY DEVICES ON DIAGRAM.

△5 BOARD IS LAYED OUT TO NORMALLY BE PLUGGED INTO A13 SLOT, HOWEVER, IT MAY BE MADE COMPATIBLE WITH THE A12 SLOT BY CUTTING TRACK BETWEEN E3 AND E4, E6 AND E7, E9 AND E10, E12 AND E5, E14 AND E8, E16 AND E11 THEN ADD JUMPERS FROM E4 TO E5, E7 TO E8, E10 TO E11, E12 TO E13, E14 TO E15, E16 TO E17.

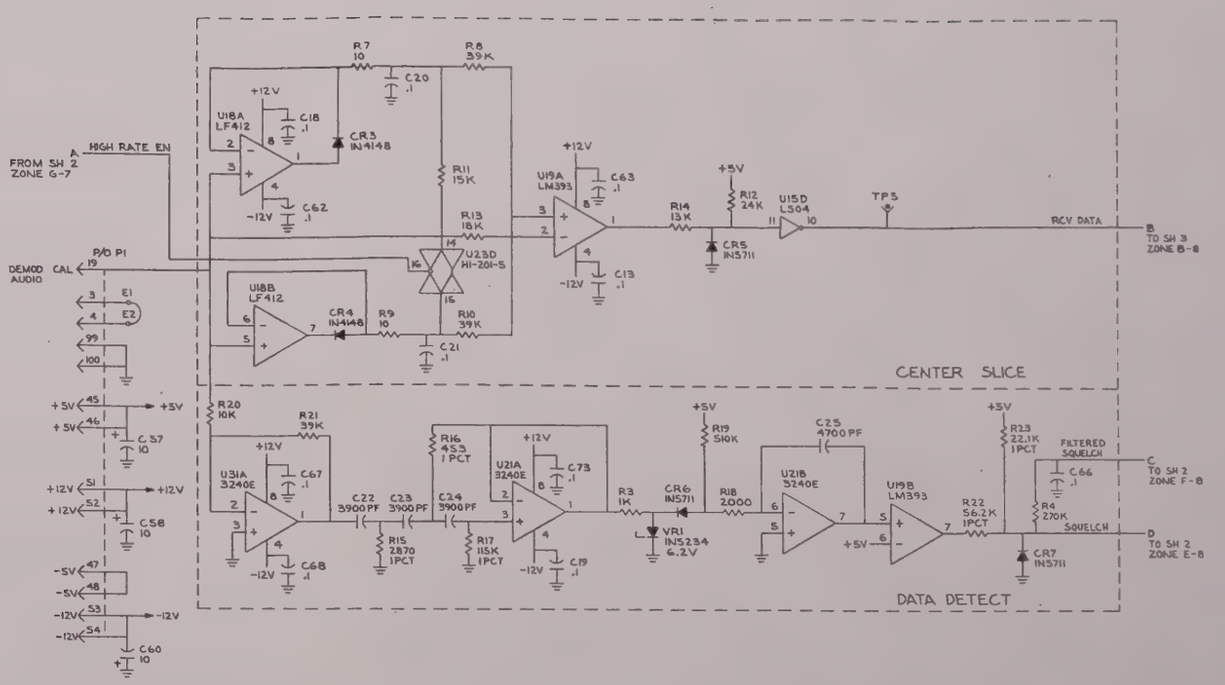

REFERENCE DESIGNATIONS	
HIGHEST NUMBER USED	NOT USED
C73	C3, C59, C69, C70
CR7	
E17	
J2	
K1	
L1	
Q2	
R51	R48, R49
TP5	
U31	U12
VR1	

REF DES	TYPE △4	VCC	GND	NO CONN.
U1	27256	-	14, 22	-
U2, U3	74LS244	-	10	-
U4	74LS245	-	10	-
U5	HM6116P3	-	12, 20	-
U6	74LS138	-	-	12, 13, 14, 15
U7	EX0-2	-	-	1, 5, 6, 7
U8	74HC4040	-	11	1, 2, 3, 4, 5, 6, 7, 9, 12, 14, 15
U9	8821	-	-	-
U10	8530	-	-	6, 10, 14, 16, 17, 23, 24, 30
U11	74LS74	-	7	-
U13	8840	-	-	3, 6, 27
U14	74LS390	-	8	5, 6, 10, 11
U15	74LS04	-	7	-
U16	74LS32	-	7	-
U17	74LS00	-	7	-

REF DES	TYPE △4	VCC	GND	NO CONN
U18	LF412CN/A +	-	-	-
U19	LM393	-	-	-
U20	74LS30	-	7	9, 10, 13
U21, U22, U31	CA3240E	-	-	-
U23	HI-201-5	-	5	12
U24	LM317	-	-	-
U25	51RO5706L79	-	-	2, 6, 7, 9, 10
U26	51RO5706L76	-	-	3, 5, 7
U27	KXN1123AA	-	-	4, 5, 6, 10, 11, 13
U28	51RO5708L60	-	-	5, 12
U29	51RO5706L87	-	-	3, 7
U30	MC14053	-	-	1, 2, 3, 4, 5, 15

WARNING:
STATIC-SENSITIVE PARTS
HANDLE APPROPRIATELY

71642-6A

Figure 23-2b. Schematic (sheet 2 of 5)

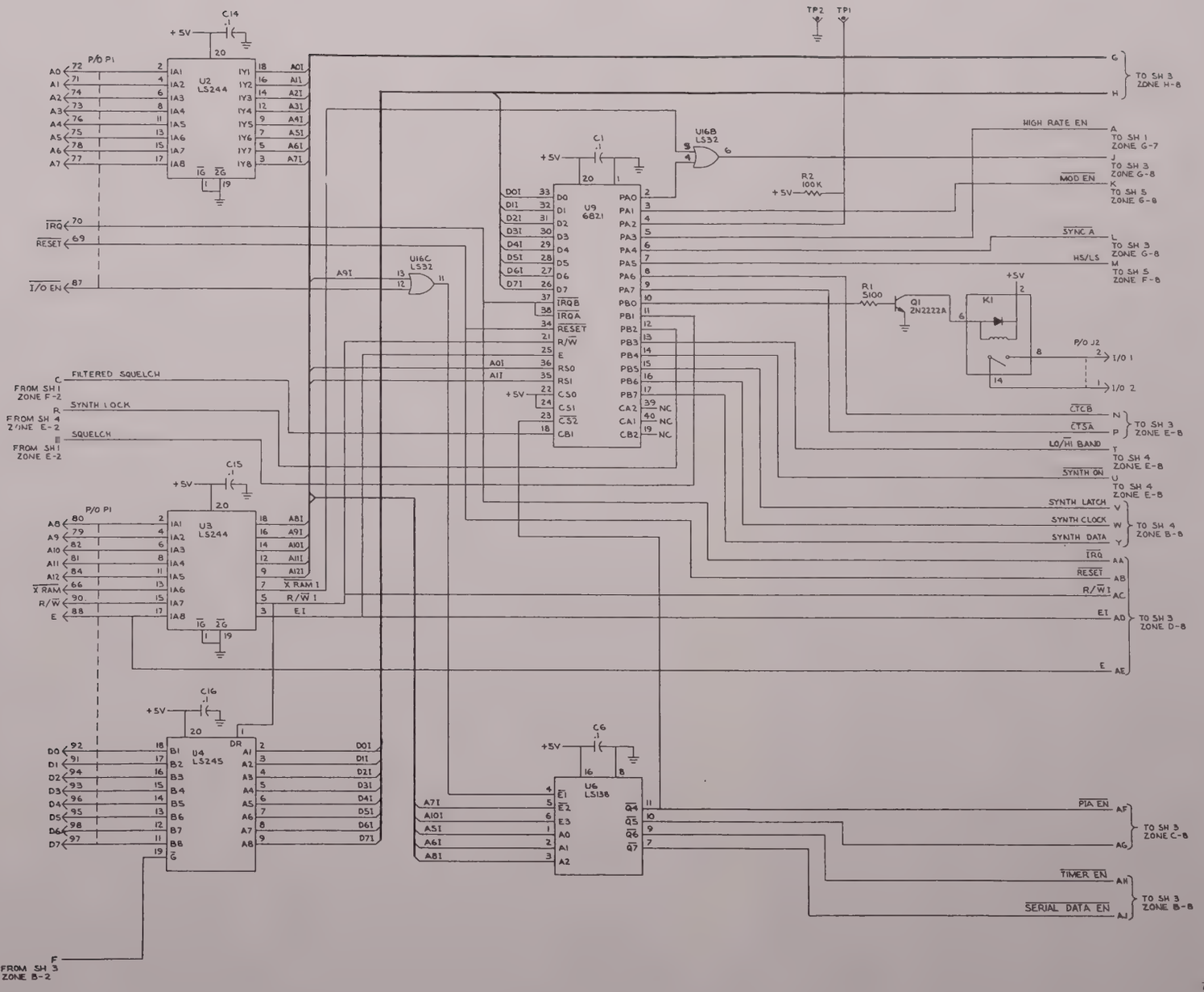

71642-6B

WARNING:
STATIC-SENSITIVE PARTS
HANDLE APPROPRIATELY

Figure 23-2b. Schematic (sheet 2 of 5)

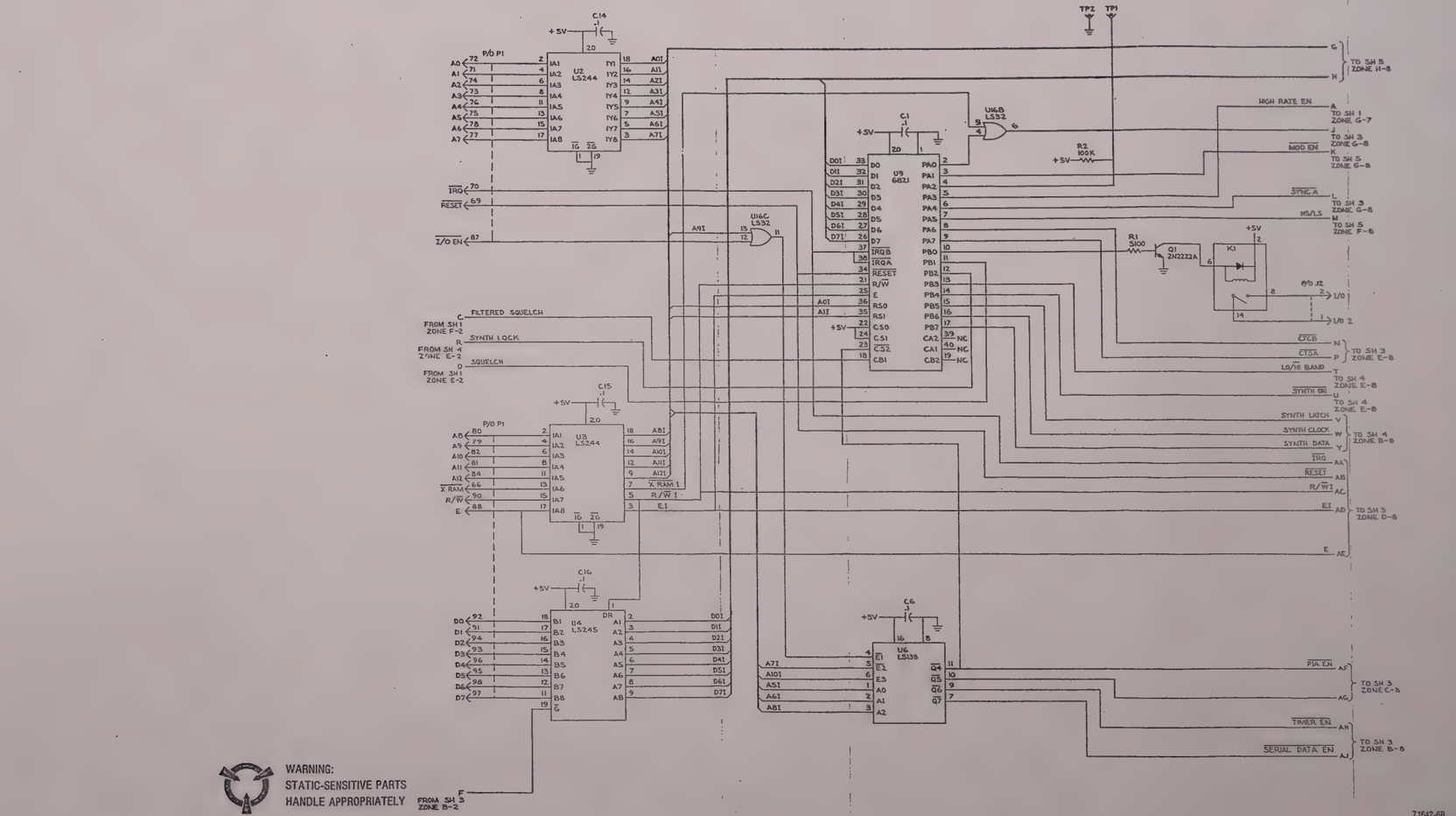

Figure 23-2c. Schematic (sheet 3 of 5)

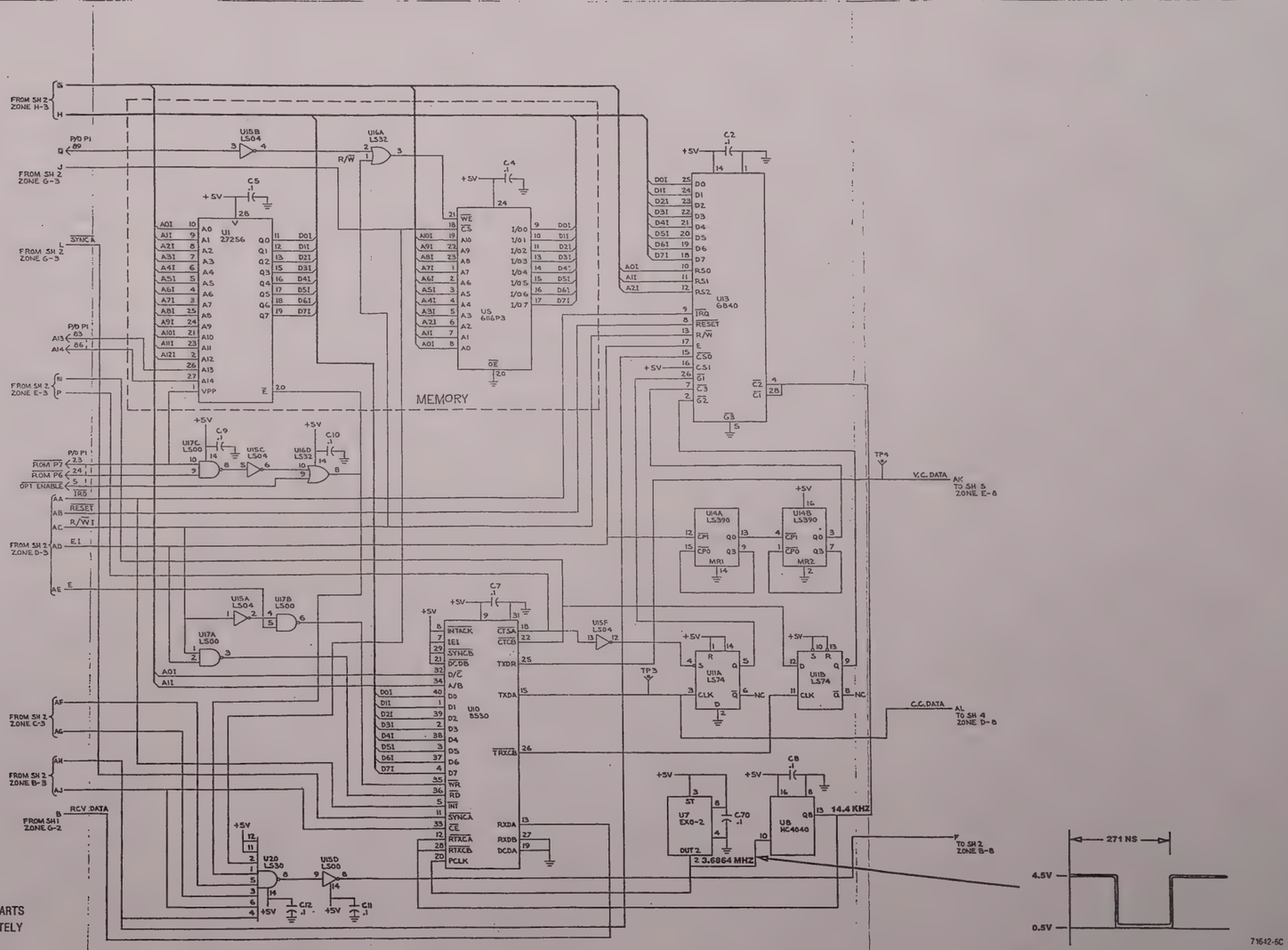

Figure 23-2d. Schematic (sheet 4 of 5)

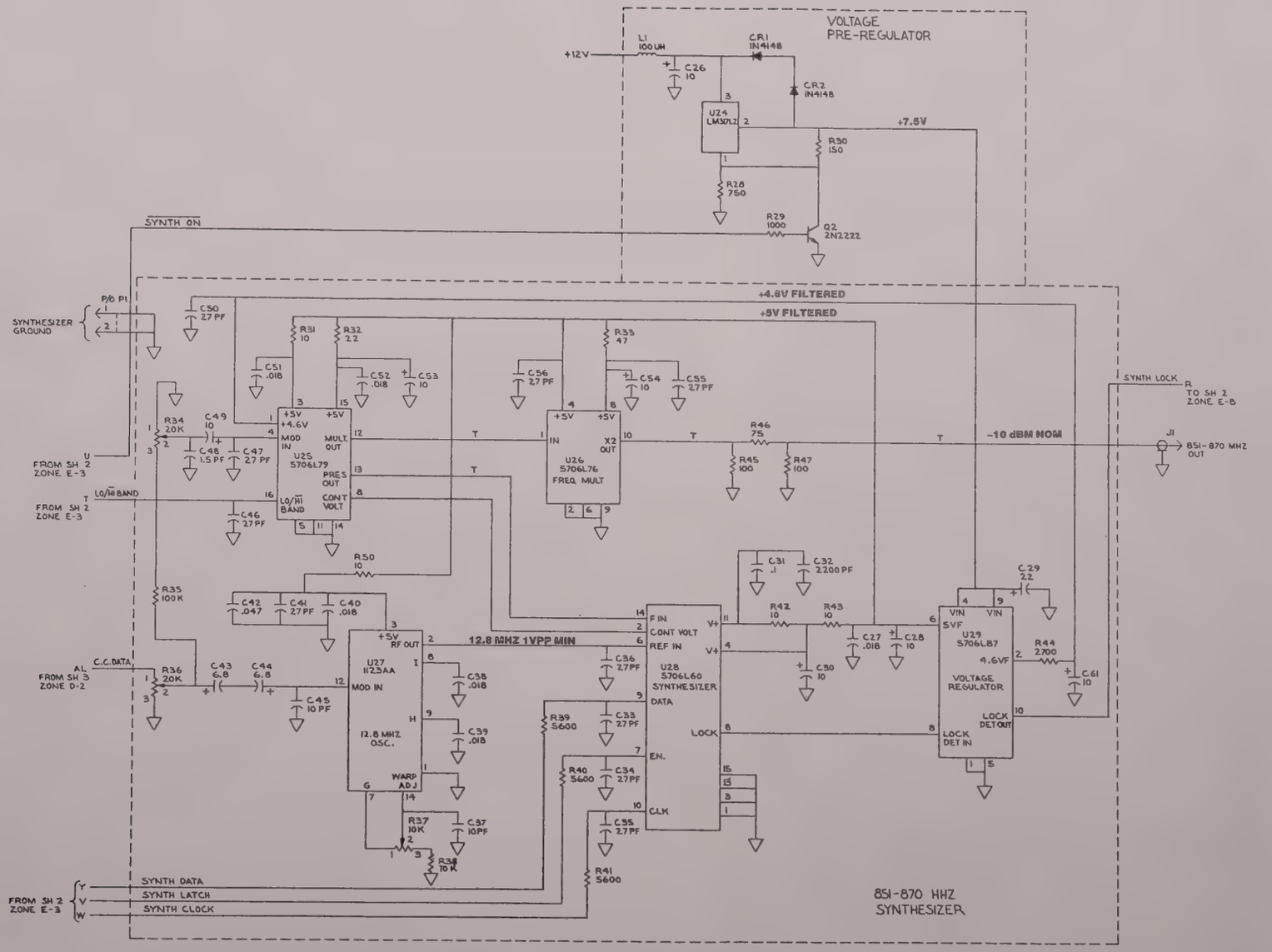

WARNING:
STATIC-SENSITIVE PARTS
HANDLE APPROPRIATELY

Figure 23-2e. Schematic (sheet 5 of 5)

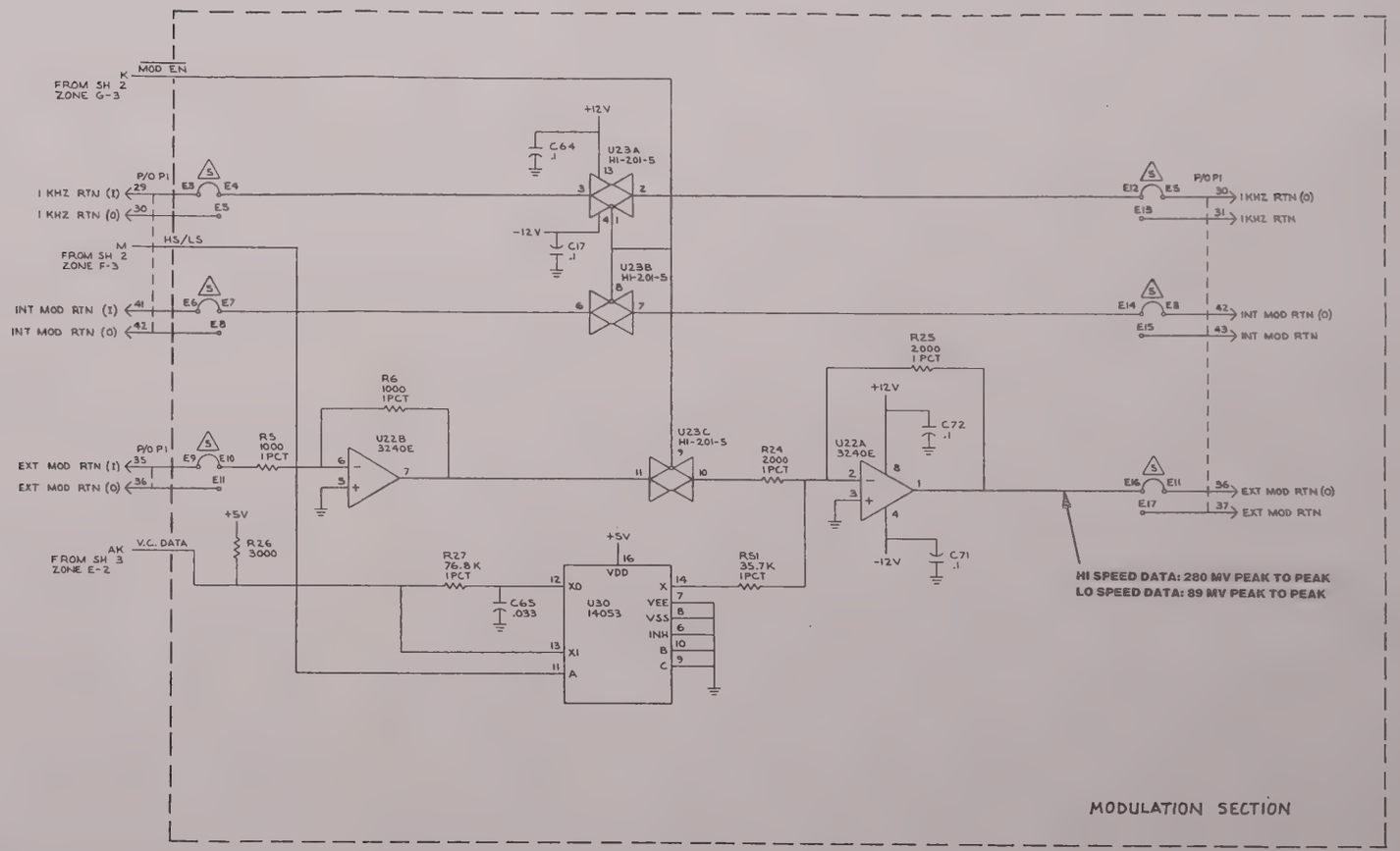

WARNING:
STATIC-SENSITIVE PARTS
HANDLE APPROPRIATELY

71642-6E

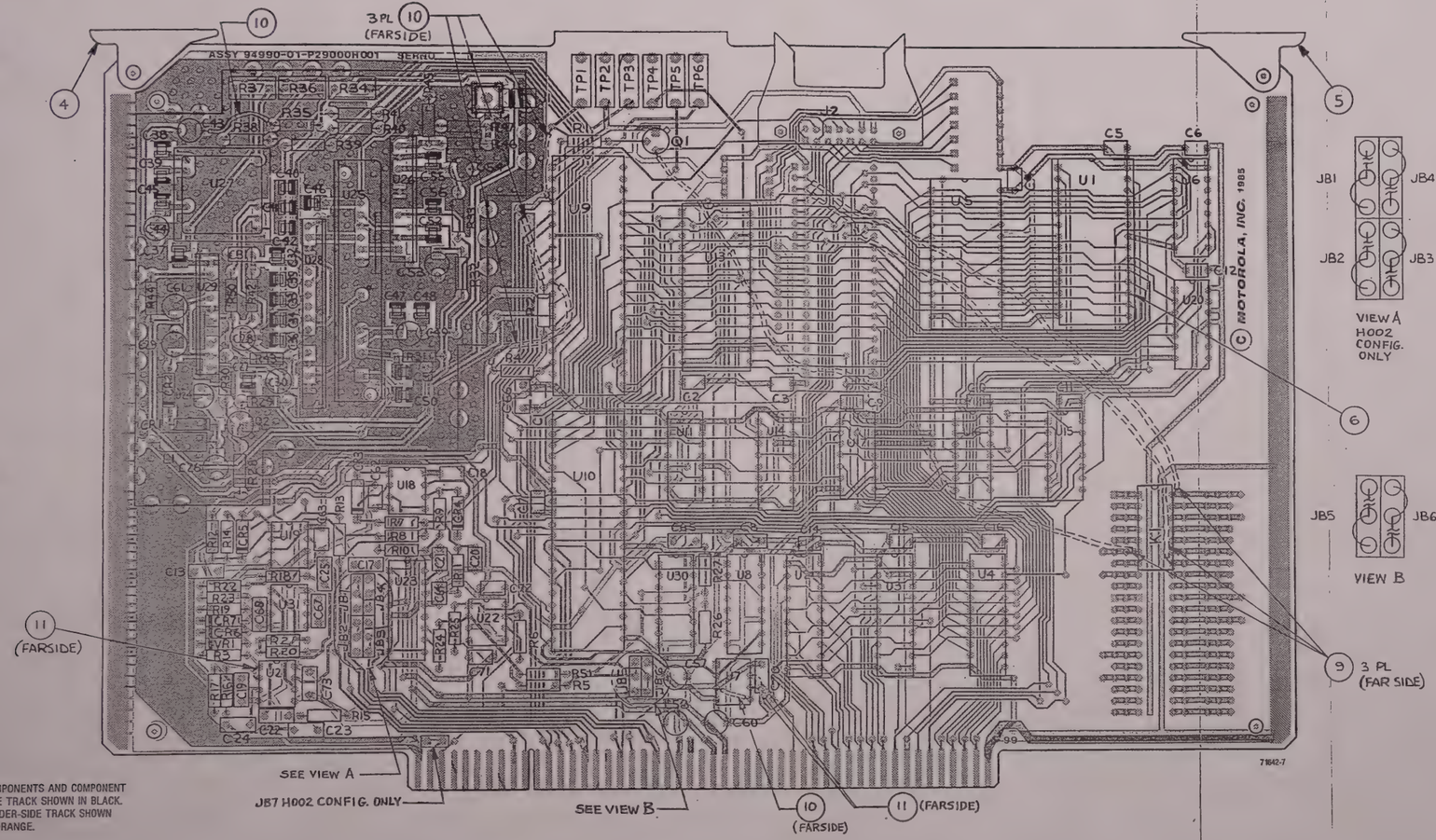

COMPONENTS AND COMPONENT SIDE TRACK SHOWN IN BLACK. SOLDER-SIDE TRACK SHOWN IN ORANGE.

TRUNKED RADIO TEST OPTION

Figure 23-3. Printed Wiring Board Assembly and Parts List

Find No.	Qty. Req.	Part No.	Nomenclature	Part Value
004	1	45-80339B28	CARD EJECTOR	
005	1	45-80375B62	CARD EJECTOR MARKED	
018	2	03-139749	SCREW	0860-56X.188
019	2	04-400139	WASHER	086
020	2	04-80375B52	WASHER	086
C 001	1	21-80342B10	CAPACITOR	1UF-20-50
C 002	1	21-80342B10	CAPACITOR	1UF-20-50
C 003	1	21-80342B10	CAPACITOR	1UF-20-50
C 004	1	21-80342B10	CAPACITOR	1UF-20-50
C 005	1	21-80342B10	CAPACITOR	1UF-20-50
C 006	1	21-80342B10	CAPACITOR	1UF-20-50
C 007	1	21-80342B10	CAPACITOR	1UF-20-50
C 008	1	21-80342B10	CAPACITOR	1UF-20-50
C 009	1	21-80342B10	CAPACITOR	1UF-20-50
C 010	1	21-80342B10	CAPACITOR	1UF-20-50
C 011	1	21-80342B10	CAPACITOR	1UF-20-50
C 012	1	21-80342B10	CAPACITOR	1UF-20-50
C 013	1	21-80342B10	CAPACITOR	1UF-20-50
C 014	1	21-80342B10	CAPACITOR	1UF-20-50
C 0155	1	21-80342B10	CAPACITOR	1UF-20-50
C 016	1	21-80342B10	CAPACITOR	1UF-20-50
C 017	1	21-80342B10	CAPACITOR	1UF-20-50
C 018	1	21-80342B10	CAPACITOR	1UF-20-50
C 019	1	21-80342B10	CAPACITOR	1UF-20-50
C 020	1	21-80341B96	CAPACITOR	1UF-10-100
C 021	1	21-80341B96	CAPACITOR	1UF-10-100
C 022	1	21-80372B87	CAPACITOR	3900PF-5-50
C 023	1	21-80372B87	CAPACITOR	3900-5-50
C 024	1	21-80372B87	CAPACITOR	3900-5-50
C 025	1	21-80341B83	CAPACITOR	4700PF-5-50
C 026	1	23-80341B15	CAPACITOR	10UF-20-50
C 027	1	21-80342B36	CAPACITOR	018UF-10-50
C 028	1	23-80341B15	CAPACITOR	10UF-20-50
C 029	1	23-80341B17	CAPACITOR	22UF-20-25
C 030	1	23-80341B15	CAPACITOR	1 UF-20-50
C 031	1	21-80342B10	CAPACITOR	1UF-20-50
C 032	1	21-80370A24	CAPACITOR	2200PF-20-50
C 033	1	21-80341B64	CAPACITOR	27PF-5-50
C 034	1	21-80341B64	CAPACITOR	27PF-5-50
C 035	1	21-80341B64	CAPACITOR	27PF-5-50
C 036	1	21-80341B64	CAPACITOR	27PF-5-50
C 037	1	21-80370A11	CAPACITOR	10PF-5-50
C 038	1	21-80342B36	CAPACITOR	018UF-10-50
C 039	1	21-80342B36	CAPACITOR	018UF-10-50
C 040	1	21-80342B36	CAPACITOR	018UF-10-50
C 041	1	21-80341B64	CAPACITOR	27PF-5-50
C 042	1	21-80344B38	CAPACITOR	047UF-10-50
C 043	1	21-80372B89	CAPACITOR	6.8UF-20-50
C 044	1	21-80372B89	CAPACITOR	6.8UF-20-50
C 045	1	21-80370A11	CAPACITOR	10PF-5-50
C 046	1	21-80342B36	CAPACITOR	27PF-5-50
C 047	1	21-80341B64	CAPACITOR	27PF-5-50
C 048	1	21-80370A09	CAPACITOR	1.5PF-.5PF-50
C 049	1	23-80341B15	CAPACITOR	10UF-20-50
C 050	1	21-80341B64	CAPACITOR	27PF-5-50
C 051	1	21-80342B36	CAPACITOR	018UF-10-50
C 052	1	21-80342B36	CAPACITOR	018UF-10-50
C 053	1	21-80341B15	CAPACITOR	10UF-20-50
C 054	1	21-80341B15	CAPACITOR	10UF-20-50
C 055	1	21-80341B64	CAPACITOR	27PF-5-50
C 056	1	21-80341B64	CAPACITOR	27pF-5-50
C 057	1	23-80341B15	CAPACITOR	10UF-20-50
C 058	1	23-80341B15	CAPACITOR	10UF-20-50
C 060	1	23-80341B15	CAPACITOR	10UF-20-50
C 061	1	23-80341B15	CAPACITOR	10UF-20-50
C 062	1	21-80342B10	CAPACITOR	1UF-20-50
C 063	1	21-80342B10	CAPACITOR	1UF-20-50
C 064	1	21-80342B10	CAPACITOR	1UF-20-50
C 065	1	21-80342B02	CAPACITOR	033UF-10-100
C 066	1	21-80341B96	CAPACITOR	1UF-10-100
C 067	1	21-80342B10	CAPACITOR	1UF-20-50
C 068	1	21-80342B10	CAPACITOR	1UF-20-50
C 069	1	21-80342B10	CAPACITOR	1UF-20-50
C 070	1	21-80342B10	CAPACITOR	1UF-20-50
C 071	1	21-80342B10	CAPACITOR	1UF-20-50
C 072	1	21-80342B10	CAPACITOR	1UF-20-50
C 073	1	21-80342B10	CAPACITOR	1UF-20-50
CR 001	1	48-84463K02	DIODE	
CR 002	1	48-84463K02	DIODE	
CR 003	1	48-84463K02	DIODE	
CR 004	1	48-84463K02	DIODE	

Find No.	Qty. Req.	Part No.	Nomenclature	Part Value
CR 005	1	48-84463K02	DIODE	
CR 005	1	48-86743C01	DIODE	
CR 006	1	48-86743C01	DIODE	
CR 007	1	48-86743C01	DIODE	
J 001	1	09-80344B23	RF CONNECTOR	
K 001	1	80-80370A88	RELAY, ELECTRONIC	
L 001	1	24-80369A37	COIL	100UH
Q 001	1	48-02089C01	TRANSISTOR	
Q 002	1	48-02089C01	TRANSISTOR	
R 001	1	06-11009C66	RESISTOR	5.1K-5-1/4
R 002	1	06-11009C97	RESISTOR	100K-5-1/4
R 003	1	06-00124A49	RESISTOR	1K-5-1/4
R 004	1	06-11009C35	RESISTOR	270K-5-1/4
R 005	1	06-10621B94	RESISTOR	1K-1-1/4
R 006	1	06-10621B94	RESISTOR	1K-1-1/4
R 007	1	06-11009001	RESISTOR	10-5-1/4
R 008	1	06-00124A87	RESISTOR	39K-5-1/4
R 009	1	06-11009C01	RESISTOR	10-5-1/4
R 010	1	06-00124A87	RESISTOR	39K-5-1/4
R 011	1	06-11009C77	RESISTOR	15K-5-1/4
R 012	1	06-11009C82	RESISTOR	24K-5-1/4
R 013	1	06-11009C79	RESISTOR	18K-5-1/4
R 014	1	06-11009C76	RESISTOR	13K-5-1/4
R 015	1	06-10621C39	RESISTOR	2.87K-1-1/4
R 016	1	06-10621B61	RESISTOR	453-1-1/4
R 017	1	06-10621D94	RESISTOR	115K-1-1/4
R 018	1	06-11009C56	RESISTOR	2K-5-1/4
R 019	1	06-11009D15	RESISTOR	510K-5-1/4
R 020	1	06-11009C73	RESISTOR	10K-5-1/4
R 021	1	06-00124A87	RESISTOR	39K-5-1/4
R 022	1	06-10621D64	RESISTOR	56.2K-1-1/4
R 023	1	06-10621D25	RESISTOR	22.1K-1-1/4
R 024	1	06-11009C56	RESISTOR	2K-5-1/4
R 025	1	06-11009C56	RESISTOR	2K-5-1/4
R 026	1	06-11009C60	RESISTOR	3K-5-1/4
R 027	1	06-10621D77	RESISTOR	76.8K-1-1/4
R 028	1	06-11009C46	RESISTOR	750-5-1/4
R 029	1	06-00124A49	RESISTOR	1K-5-1/4
R 030	1	06-11009C29	RESISTOR	150-5-1/4
R 031	1	06-11009C01	RESISTOR	10-5-1/4
R 032	1	06-11009C09	RESISTOR	22-5-1/4
R 033	1	06-11009C18	RESISTOR	47-5-1/4
R 034	1	18-83452F15	RESISTOR, VARIABLE 20K	
R 025	1	06-11009C97	RESISTOR	100K-5-1/4
R 036	1	18-83452F15	RESISTOR, VARIABLE 20K	
R 037	1	18-83452F13	RESISTOR, VARIABLE 10K	
R 038	1	06-11009C73	RESISTOR	10K-5-1/4
R 039	1	06-11009C67	RESISTOR	5.6K-5-1/4
R 040	1	06-11009C67	RESISTOR	5.6K-5-1/4
R 041	1	06-11009C67	RESISTOR	5.6K-5-1/4
R 042	1	06-11009C01	RESISTOR	10-5-1/4
R 043	1	06-11009C01	RESISTOR	10-5-1/4
R 044	1	06-00124B55	RESISTOR	2.7-5-1/4
R 045	1	06-11009C25	RESISTOR	100-5-1/4
R 046	1	06-11009C22	RESISTOR	75-5-1/4
R 047	1	06-11009C25	RESISTOR	100-5-1/4
R 050	1	06-11009C01	RESISTOR	10-5-1/4
R 051	1	06-10621D45	RESISTOR	35.7K-1-1/4
TP001	1	09-80331A88	JACK	WHITE
TP002	1	09-80331A88	JACK	WHITE
TP003	1	09-80331A88	JACK	WHITE
TP004	1	09-80331A88	JACK	WHITE
TP004	1	09-80331A88	JACK	WHITE
TP005	1	09-80331A88	JACK	WHITE
TP006	1	09-80331A88	JACK	WHITE
U 001	1	51-80372B98	INTEGRATED CIRCUIT	
U 002	1	51-82609M56	INTEGRATED CIRCUIT	
U 003	1	51-82609M56	INTEGRATED CIRCUIT	
U 004	1	51-82609M57	INTEGRATED CIRCUIT	
U 005	1	51-80339B86	INTEGRATED CIRCUIT	
U 006	1	51-84561L41	INTEGRATED CIRCUIT	
U 007	1	48-80372B93	INTEGRATED CIRCUIT	
U 008	1	51-80370A83	INTEGRATED CIRCUIT	
U 009	1	51-802807K20	INTEGRATED CIRCUIT	
U 010	1	80-80372B91	COMMUNICATION CONTROLLER	
U 011	1	51-05467G07	INTEGRATED CIRCUIT	
U 013	1	51-82848M44	INTEGRATED CIRCUIT	
U 014	1	51-82609M68	INTEGRATED CIRCUIT	
U 015	1	51-84561L03	INTEGRATED CIRCUIT	
U 016	1	51-84561L36	INTEGRATED CIRCUIT	
U 017	1	51-82609M68	INTEGRATED CIRCUIT	
U 018	1	51-80372B99	INTEGRATED CIRCUIT	
U 019	1	51-80345A10	INTEGRATED CIRCUIT	
U 020	1	51-80370A86	INTEGRATED CIRCUIT	
U 021	1	51-80345A04	INTEGRATED CIRCUIT	CA3240E SCREENED
U 022	1	51-80345A04	INTEGRATED CIRCUIT	CA3240E SCREENED
U 023	1	51-80345A05	INTEGRATED CIRCUIT	HI-201-5 SCREENED
U 024	1	51-80370A78	INTEGRATED CIRCUIT	
U 025	1	51-05706L99	VCO	
U 026	1	51-05706L76	RF FREQUENCY MULT.	
U 027	1	KVN1123AA	REFERENCE OSCILLATOR	12.8 MHz
U 028	1	51-05706L90	SYNTHESIZER MODULE	
U 029	1	51-05706L87	VOLTAGE REGULATOR	
U 030	1	51-05467G01	INTEGRATED CIRCUIT	
U 031	1	51-80345A04	INTEGRATED CIRCUIT	CA3240E SCREENED
VR001	1	48-80342B16	DIODE	